TOYOTA
Sprinter Carib

Models
2WD & 4WD 199
5–2001 productio
n years

DEVICE, MAINTENANCE
AND REPAIR

Legion -
Autodata

Toyota SPRINTER CARIB

Models 2WD & 4WD 1995–2001 production years

with 4A-FE (1.6 L),

4A-GE (1.6 L) and 7A-FE (1.8 L) engines

Structure, Technical
Maintenance and Repair

Moscow
Legion-Autodata
2003

UDC 629.314.6
BBK 39.335.52
T

ISBN 5-88850-144-1

Toyota SPRINTER CARIB. Models 2WD & 4WD, 1995–2001 production years. Structure, Technical Maintenance and Repair. - M.: Legion-Autodata, 2003. - 296 pp.: ill.

The manual provides step-by-step descriptions of operating, repair, and technical maintenance procedures for right-hand-drive Toyota SPRINTER CARIB vehicles with four-wheel drive and front-wheel drive produced in 1995–2001, equipped with 4A-FE (1.6 L), 4A-GE (1.6 L), and 7A-FE (1.8 L) engines.

The edition contains detailed information on the repair and adjustment of gasoline engine management system components (fuel injection and ignition), instructions for using the automatic transmission and ABS self-diagnostic systems, and recommendations for the adjustment and repair of manual and automatic transmissions, braking system components (including ABS), and steering. Detailed electrical diagrams are provided for ALL equipment variants!!!

Possible malfunctions and methods for their elimination are presented, along with mating dimensions of the main parts and the limits of their permissible wear, recommended lubricants, and operating fluids.

Additionally, the edition includes information on the interchangeability of certain parts, which can be used when selecting non-original spare parts (see pp. 289–291).

The book is intended for vehicle owners, service station staff, and repair workshops.

The publisher thanks the organizers of the website "Right-hand drive cars in Russia" (http://pravo.ruz.net) for providing information for the chapter "Operating Instructions".

The publishing house "Legion-Autodata" cooperates
with the Association of Veterans of the Counterterrorism Unit
"ALPHA".

Part of the proceeds from the sale of this book is allocated to the families of counterterrorism unit personnel who heroically died in the line of duty.

© CJSC "Legion-Autodata" 2002
tel. (095) 273-42-61, 517-05-40
tel./fax (095) 362-18-19
E-mail: Legion@autodata.ru
http://www.autodata.ru

Remarks, tips from vehicle operation and repair experience, and recommendations and feedback about our books may be sent to the publisher at: Legion@autodata.ru We are ready to consider proposals for placing advertising in our publications.

ISBN 5-88850-144-1

Publishing license ID No. 00419 dated 10.11.99.
Approved for printing 10.10.03.
Format 60×90 1/8. Printing sheets 37.
Paper: offset. Printing: offset.

Printed from final diapositives
At the State Unitary Enterprise of the Moscow Region "Kolomna Printing House".
140400, Moscow Region, Kolomna, 3rd Internationala Street, 2a
T. 3010. 3. 3372.

This publication is protected by copyright. No part of this publication is permitted to be reproduced, transferred to other media, or stored in any form, including electronic, mechanical, on tapes, or photocopies.

Although all measures have been taken to provide accurate data in the manual, the authors, publishers, and suppliers of the manual are not responsible for failures, defects, losses, incidents of injury, or death, caused by the use of incorrect or mis- represented information, omissions, or errors that may have occurred in the preparation of the manual. or by incorrect presentation of information, omissions, or errors that may have occurred during the preparation of the manual.

Abbreviations and symbo ls

Abbreviations

2WD ..... front-wheel drive models
4WD ..... all-wheel drive models
A/C.... ..... air conditioner
ABS ..... anti-lock braking system
AT (A/T) ..... automatic transmission
EFI ..... electronic fuel injection system
EGR..... exhaust gas recirculation system
J/B ..... fuse/relay box
LH ..... left (on the left side)
MT (M/T) ... . manual transmission
OFF ..... off
ON ..... on
PCV ..... crankcase ventilation system
R/B ..... relay block
RH ..... right (on the right side)
SRS ..... airbag system
STD ..... standard configuration
AKPP (automatic transmission) ..... automatic transmission
BMT ..... top dead center
in... ..... intake
OUT ..... exhaust
TIMING DRIVE (timing mechanism) ..... valve timing mechanism
MANUAL TRANSMISSION (gearbox) ..... gear shift box
cr. ..... except
M3 ..... torque tightening
MT ..... manual transmission
HMT ..... Bottom dead center
og ..... of exhaust gases
pcs. ..... pieces (quantity)
Elec. M. E/M ..... electromagnetic valve

Legend / Designations

◆, ● ..... part not subject to reuse
for reuse
★ ..... apply an anaerobic adhesive-sealant
THREE BOND 1324 (or equivalent)
to two or three threads at the end of the bolt

Identification

Body number (VIN) and identification plate

Body number (VIN) and identification plate are located on the firewall of the engine compartment.

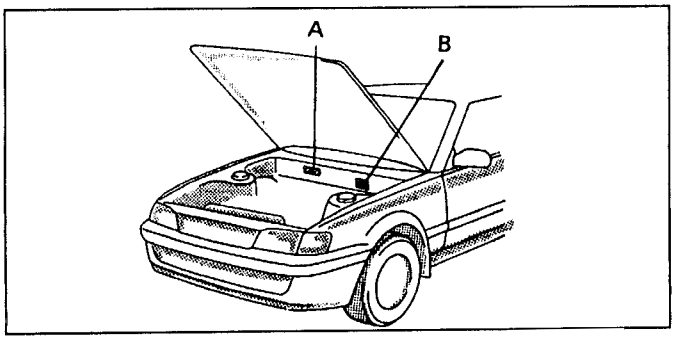

A - Vehicle body number, B - Identification plate.

Engine number

The engine number is stamped on the cylinder block; the location of the number is indicated by an arrow in the corresponding illustration.

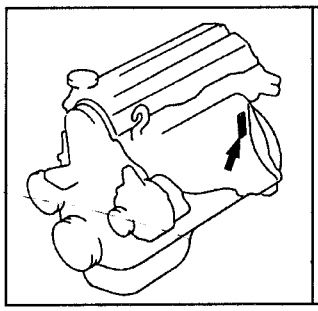

Engines 4A-FE, 7A-FE.

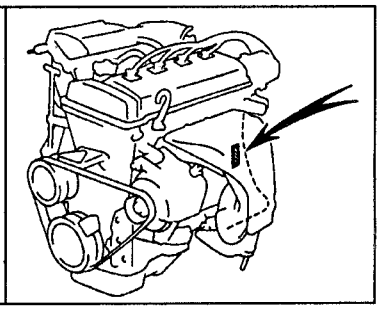

Engine 4A-GE.

Technical specifications

of the engines installed on the Toyota Sprinter Carib Note: The indicated power and torque values are approximate and may vary depending on the specific model and year of manufacture, but in most cases the deviation does not exceed ±5%.

Engine	Displacement, cm³	Power, hp at rpm	Torque, N·m at rpm
4A-FE	1587	110 / 6000	140 / 4400
4A-GE	1587	160 / 7000	165 / 5600
7A-FE	1762	110 / 5800	155 / 2800

Engine	Diameter of cylinder, mm	Piston stroke, MM	Compression ratio
4A-FE	81	77	9,5
4A-GE	81	77	11
7A-FE	81	85,5	9,5

General instructions for repair

1. Use covers on the fenders, seats, and floor mats to protect the vehicle from dirt and damage.

2. When disassembling, place parts in the correct order to facilitate subsequent reassembly.
3. Observe the following rules:
a) Before performing work on electrical equipment, disconnect the cable from the "-" terminal of the battery.
b) If it is necessary to disconnect the battery for inspection or repair work, always disconnect the cable from the negative (-) terminal that is connected to the vehicle body first.
c) When performing welding work, the battery and the connectors of the electronic control unit should be disconnected.
4. Check the reliability and correct fastening of connecting couplings, hose nipples, and wire connectors.

5. Parts not subject to reuse. a) The company "TOYOTA" recommends replacing split pins, sealing gaskets, sealing rings, oil seals, etc. with new ones.

b) Parts not subject to reuse are marked with the "•" symbols in the illustrations, и "♦".

6. Before performing work in the paint booth, the vehicle battery and the electronic control unit must be disconnected and removed from the vehicle.

7. If necessary, a sealing compound should be applied to the gasket seals to prevent leaks.

8. Strictly observe all technical specifications regarding the torque values of threaded connections. A torque wrench must be used.

9. Depending on the nature of the repair being performed, the use of special materials and special tools for maintenance and repair may be required.

10. When replacing blown fuses, ensure that the new fuse is rated for the appropriate current. IT IS FORBIDDEN to exceed this nominal current rating or to insert a fuse of a lower rating.

11. When jacking up the vehicle and installing supports, appropriate precautions must be taken. Make sure the vehicle is lifted and the supports are positioned at the designated points. Attention:

• Prolonged and frequently repeated contact of oil with the skin causes dryness, irritation, and dermatitis, and in some cases used oil may cause skin cancer.

• When changing oil, to avoid contact with it, it is recommended to wear oil-resistant gloves. When washing hands use soap and water; the use of gasoline, paint removers, and solvents is not recommended. • Used oil and used filters must be collected in specially prepared containers.

Points for positioning the garage jack and the lift's arms

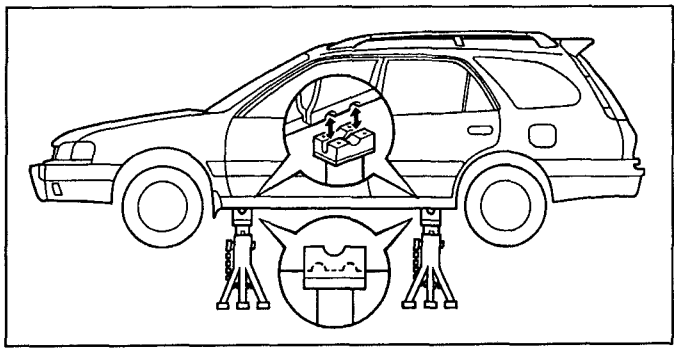

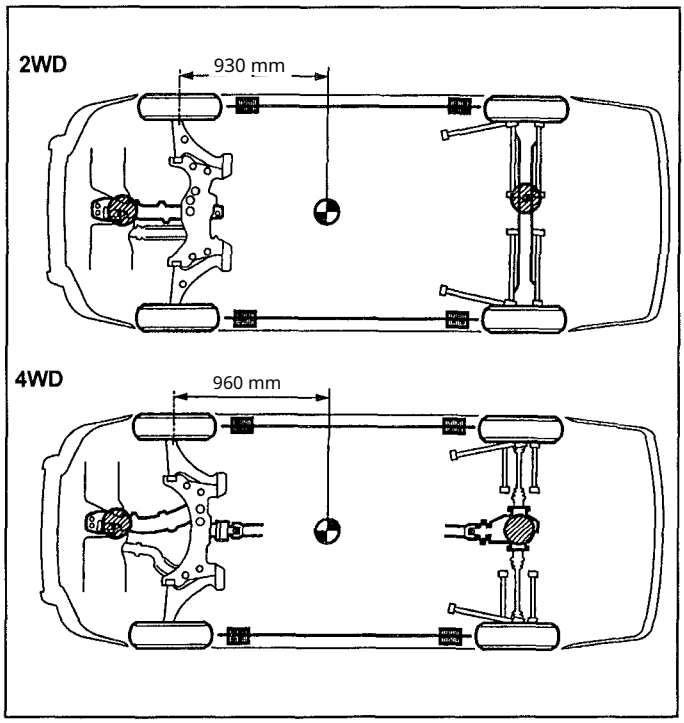

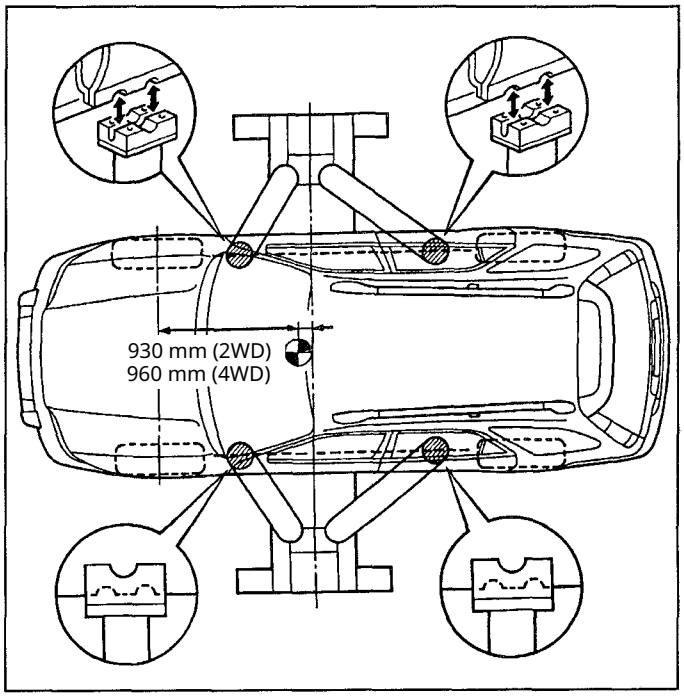

Lifting arm mounting points.

- Garage jack mounting points.
- Support stand mounting points.
- Vehicle center of mass.

Owner's Manual

WARNING: When performing work inside a vehicle equipped with an airbag and seat belt pretensioner system (SRS) , be especially careful not to damage the SRS control unit. To prevent accidental deployment of the airbags or seat b elt pretensioners before starting work, set the wheels to the straight-ahead position and turn the ignition switch to the "LOCK" position, disconnect the negative battery cable and wait at least 90 seconds (time for the backup power to discharge). Do not attempt to disassemble the airbag module or the seat belt pretensioner module, as these mo dules contain no serviceable parts. If the airbags and/or seat belt pretensioners have been deployed, they cannot b e repaired or reused.

Control and measuring-

measuring instruments and controls

management

1. Brake Condition Indicator

systems.

a) The indicator lights up if:
- parking brake engaged;
- low brake fluid level
leakage or compromised seal
of the brake booster;
- The indicator's electrical circuit is faulty.

b) If the warning light comes on while driv ing, reduce your speed, pull off the road and stop the vehicle carefully.

- Check the parking brake; it may be engaged. If the parking brake is releas ed or the warning light remains on afte r releasing it, there is a malfunction in t he braking system.

- Check the brake fluid level in the res ervoir.
- If the brake fluid level is low, in a saf e location check the vehicle's braking performance. If you believe the brak es still operate sufficiently, carefully drive the vehicle to the nearest repai r facility. If the brakes do not work, th e vehicle must be towed or recovere d for repair.

Warning: driving a vehicle with
a low brake fluid level
is dangerous.

- If the brake fluid level is normal, the b rake booster may be malfunctioning or there may be a fault in the indicator's el ectrical circuit.

2. ABS indicator.
When the ignition is switched on the indi cator lights for a few seconds and then g oes out. If the indicator lights while drivin g, there may be a fault in the anti-lock br aking system. Warning: repeated depres sing of the brake pedal may cause
the indicator to illuminate for a few second s.

3. Battery charging warning lamp.

a) The warning lamp lights up in the event of a battery discharge.

b) If the charging indicator lamp lights up while driving, the charging system i s malfunctioning or the alternator belt is loose. However, the engine will conti nue to operate until the battery is com pletely discharged

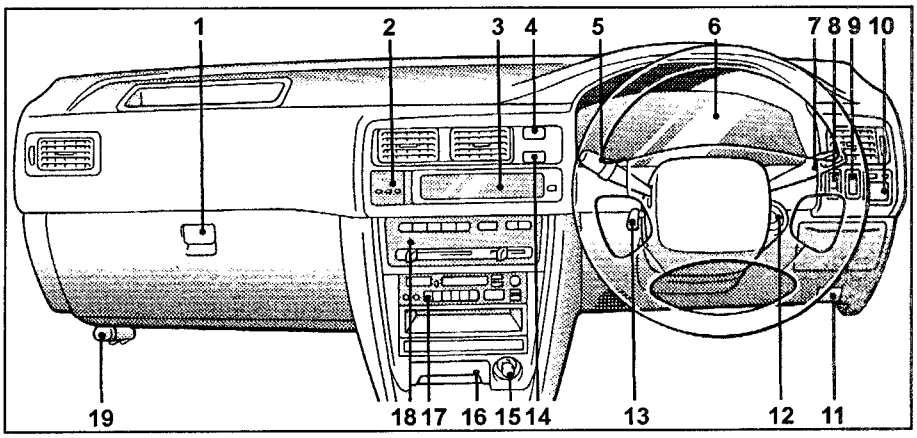

Instrument panel. 1 - glove box, 2 - clock, 3 - additional information panel, 4 - hazard w arning switch, 5 - wiper and washer switch, 6 - instrument cluster, 7 - headlight and tur n signal switch, 8 - rear door lock switch, 9 - center differential lock switch, 10 - mirror c ontrol panel, 11 - hood release lever, 12 - ignition lock, 13 - steering wheel position adju stment lever, 14 - rear window defogger switch, 15 - cigarette lighter, 16 - ashtray, 17 - car radio, 18 - air conditioner and heater control panel, 19 - flare.

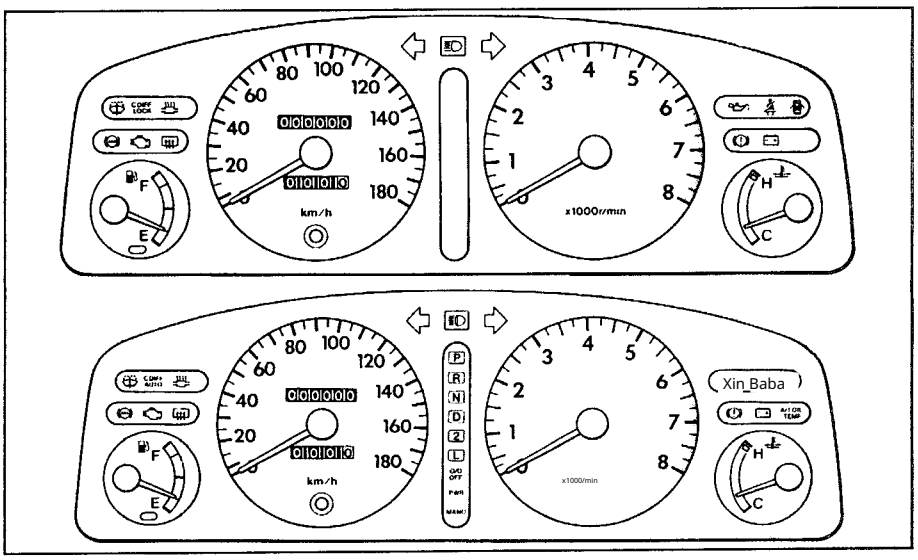

Possible instrument cluster configuration options.

Proceed. Turn off additional equipment (ai r conditioner, fan, radio receiver, etc.) and move to the repair location. Low oil press ure warning light

4.

Low oil pressure warning light.

a) The warning light illuminates if the engine oil pressure is too low.

b) If the warning light flashes or stays on con tinuously while driving, pull off the road to a safe location and stop the engine immediate ly.

- The warning light may flash after sud den braking or when the engine is idlin g. There is no fault if the warning light g oes out after a slight increase in engine speed.

- The warning light may come on when the engine oil level is too low. However, this light is not intended to indicate low oil level, so periodically check the level with the dipstick.

5. "Check Engine" indicator ("CHEC K ENGINE").
The indicator lights up when there are m alfunctions in the engine management sy stem.
6. Low-Level Warning Lamp
fuel.
The warning light turns on when the fuel l evel in the tank approaches zero. Dependi ng on the vehicle's equipment, you may ha ve enough fuel for 40–60 km of travel on g ood roads. On slopes or in turns the warni ng light may illuminate due to fuel sloshin g in the tank.

7. Indicator for an open or not properly closed door.
The indicator remains on until all doors, including the rear hatch, are fully closed.
fully.
8. Audible alarm when a door is opened.
An audible signal will sound if the driver's door is opened while the ignition key is in the "LOCK" or "ACC" position.
9. Odometer and trip meters.
a) The odometer displays the vehicle's total mileage.
b) The trip meters show the distance traveled since the last time a trip meter was reset to zero.
c) The button located under the spee dometer is intended to reset the odo meter readings to zero.

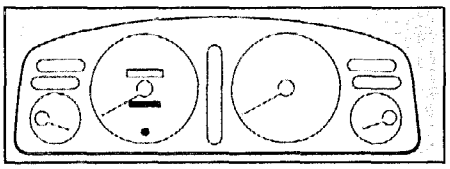

Instrument cluster indicators and audible signals.

	Parking brake system and level brake fluid		Presence Indicator malfunctioning (abnormal) lamp
	Battery charging warning la mp		Driver's unfastened seat belt indicator
	Engine oil pressure warning la mp "Check Engine" malfunction i	ABS	Anti-lock braking system (ABS) i ndicator
	ndicator ("CHECK ENGINE") L ow fuel level warning l amp	P R N D 2 L	Selector position indicators automatic transmission (A/T) selector
		A/T OIL TEMP	transmission fluid ov erheating indicator
	Open or not fully closed door indicator	O/D OFF	Shutdown indicator overdrive
	Exhaust gas temperature warning indicator gases	PWR	Selection indicator "Sport" program
	Turn signal indicators turn	MANU	Selection indicator for "winter" program
	Power Indicator High beam headlights	C.DIFF | Center differential lock indicator	LOCK of the center differential (4WD, MT)
	Power Indicator fog lights	C.DIFF | Auto-lock permission indicator	AUTO lock of the center differential (4WD, AT)
sound. signal.	Ignition key left in the lock or lights not turned off		

Door lock

1. The set usually includes several keys.

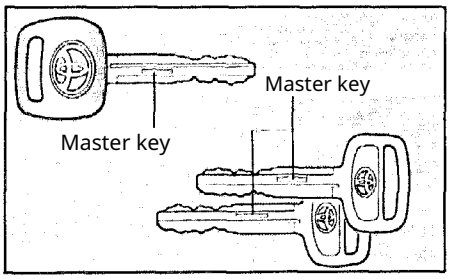

2. To open/close the driver's door and fro nt passenger door from the outside, inser t the key into the door lock and turn it to t he right/left.

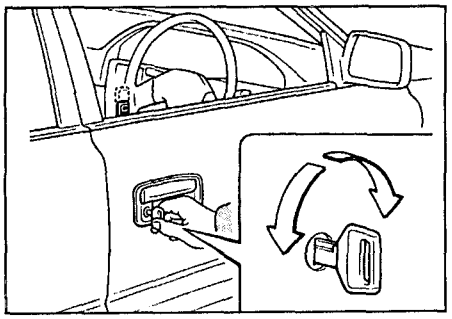

The driver's door and the front passeng er door can be locked without the key. T o do this, press the door lock button, pul l the interior door handle toward you, a nd while holding the handle, close the d oor.

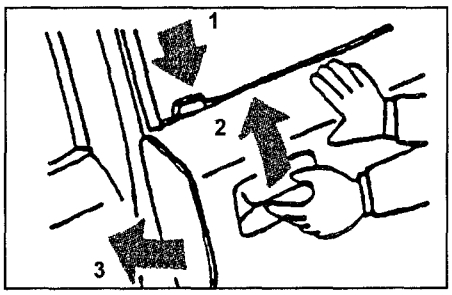

3. The rear doors are locked by pressing th e door lock button.

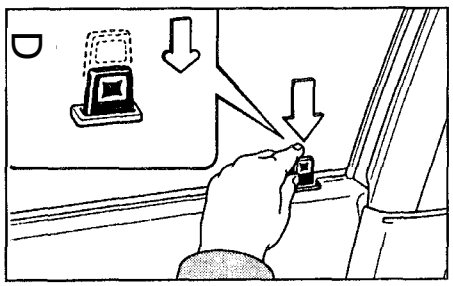

The rear doors can only be opened from the inside.
4. An additional door lock may be present on the rear doors. This feature allows the door to be locked so that it can only be opened from the outside. It is recommended to use enable this function whenever small chi ldren are in the vehicle. To activate, mo ve the locking lever to the upper positio n as shown in the illustration.

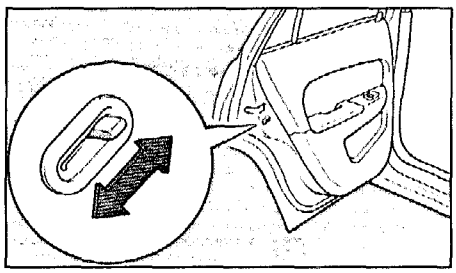

5. Some models are equipped with a centr al locking system. When unlocking or locki ng with the key from the outside, the drive r's doors automatically open/close all door s, including the rear hatch.

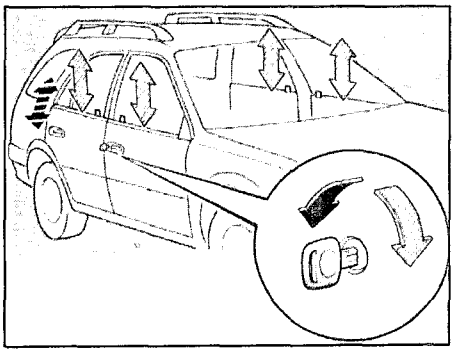

On these models, it is possible to lock all doors from the inside using the control panel located on the door

Driver. When the "DOOR LOCK" switch is p ressed, as shown in the figure, all doors ar e automatically locked.

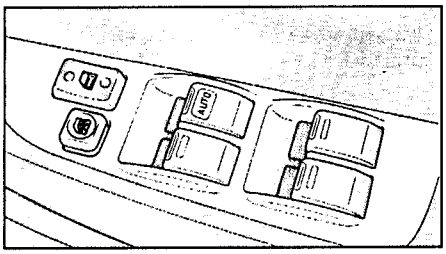

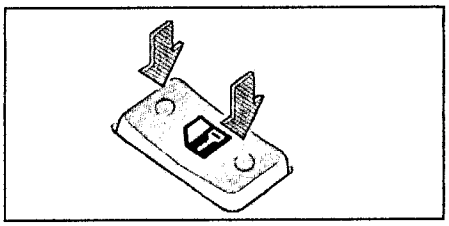

When the switch is returned to its origin al position, all doors are unlocked.

6. Some variants are equipped with a remote door lock control system. Unlocking and locki ng of the doors is performed by pressing a b utton on the key fob.

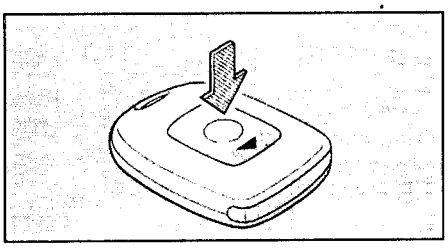

The distance to the vehicle should not ex ceed 1 m.

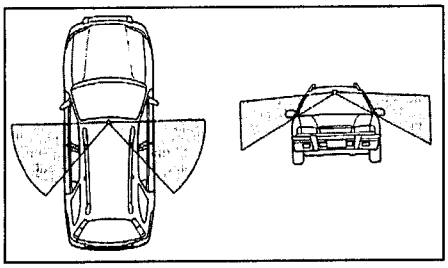

Areas covered by the remote door-locking syst em.

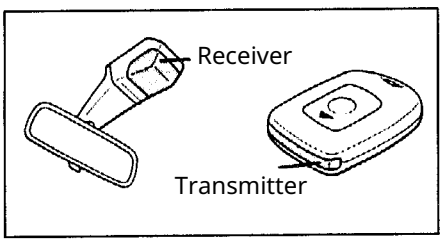

Location of the receiver on the vehicle: front left door.

Note:

- The remote door locking system will no t operate if the ignition key is in the igniti on lock, if any door is not fully closed, or i f the transmitter battery is dead. (See the "Body Electrical" chapter.)
- Each set of transmitters (keys) and the receiver has its own identificatio n code. If the receiver receives more than two incorrect codes, the remot e lock system is disabled.

Window regulator

The adjustment of the door window positio ns can be carried out in two ways: from the control panel on the driver's door or from the control panel on the passeng er door. The ignition key must be in the " ON" position.

On the panel of each door there is a switc h which, when pressed, allows the passen ger to adjust the position of only the wind ow on their side.

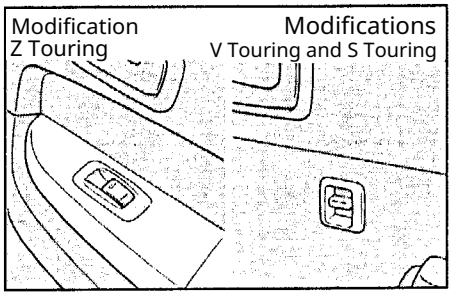

From the driver's door panel, it is POSSIB LE to control the position of the windows of ALL doors, and also to lock them usin g the corresponding "WINDOW LOCK" s witch.

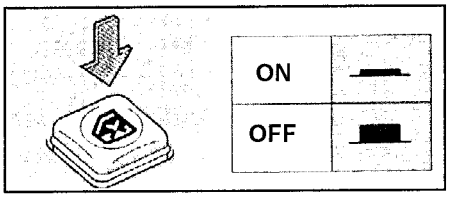

When the switch is pressed, the position of any win dow cannot be changed.

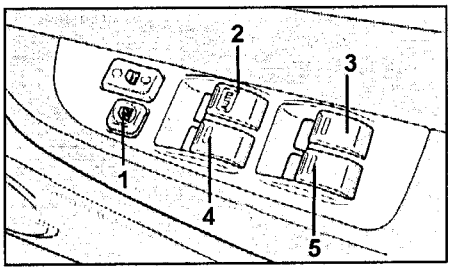

1 window lock switch "WINDOW LOCK",

2 - power window switch Driver's door, 3 - po wer window switch of the rear right door, 4 - power window switch of the rear left door, 5 - power window switch

The driver's power window switch has an a dditional full-down function for the driver's window. To fully lower the window, press t he "AUTO" switch; to stop the window, pres s the switch again. To fully close the windo w, press the switch as shown in the illustrat ion.

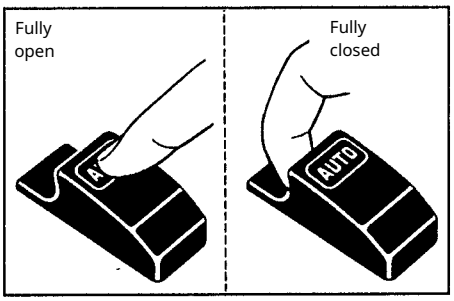

If you forgot to close a window and have al ready removed the key from the ignition, t here is a function that allows you to close t he window. To do this, simply press the cor responding switch.

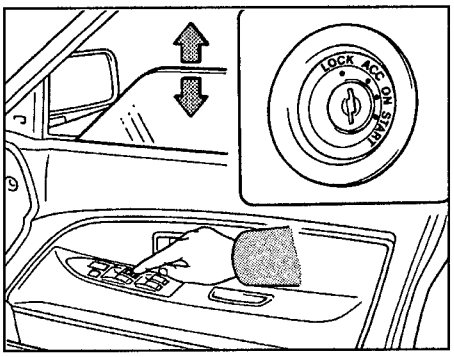

Vehicle light indicators

1. Headlight and turn signal switch.

a) When the knob is turned to the first clic k, the parking lights, license plate illumina tion, and instrument panel illumination ar e switched on.

b) When the knob is turned to the seco nd click, the low beam headlights are s witched on. Warning: To avoid dischargin g the battery, do not leave the headlights on for extended periods when the engin e is off.

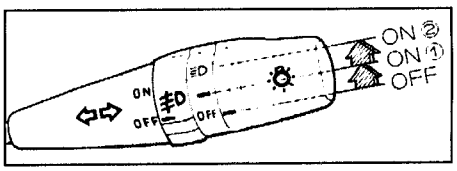

	ON①	ON②
front headlamps	-	+
parking lights and bulb local lighting	+	pro
license plate illumination	+	+
instrument cluster	+	+

c) To switch on the high beam headlig hts press the lever away from you. To switch off the high beams and turn on the low beam headlights pull the leve r toward you.

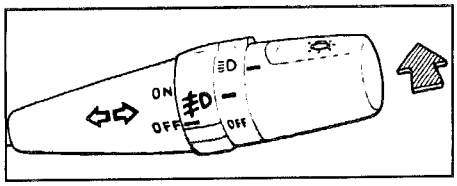

c) For short-term activation

High-beam headlights (alarm 1. To open the hood, follow the illustration, and lift the tailgate.

With the high beam headlights on, pull th e lever toward you fully, then release the lever.

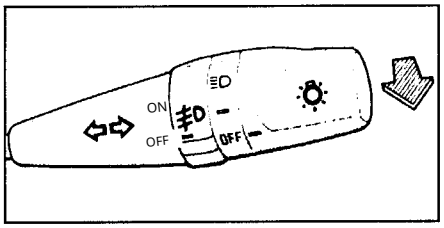

d) To activate the turn signal, move the le ver up or down. The lever will automatica lly return to its original position after the turn is completed. However, when chang ing lanes, you may need to manually retu rn the lever to the neutral position. To act ivate the lane-change signal, move the le ver up or down until you feel resista nce to movement and hold it in that posit ion.

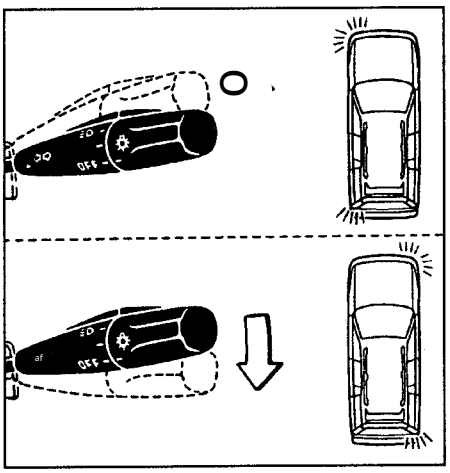

Hood and tailgate

To open the hood, follow the illustration, and lift the tailgate.

perform the following procedures: - pull the hood lock lever as shown in t he illustration.

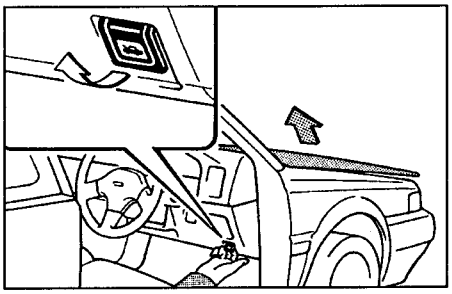

- slightly raise the hood and release the hoo d latch.

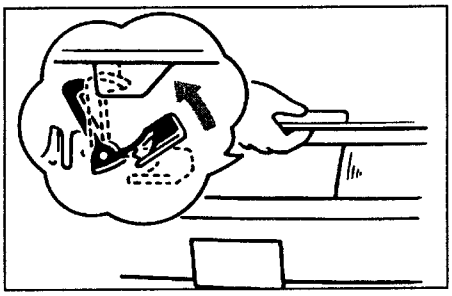

- raise the hood and secure it on the pr op rod as shown in the illustration.

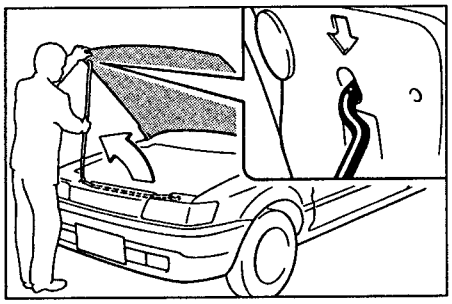

4. Pull the handle as shown in the

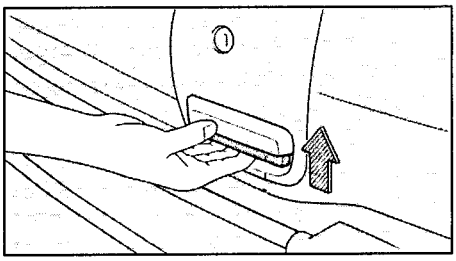

5. On some models, it is possible to operate t he rear gate lock from the instrument panel using the corresponding switch located as sh own in the illustration. In the "LOCK" position , the rear gate lock is locked and the rear gat e cannot be opened from the outside. In the "UNLOCK" position, the rear gate can be ope ned from the outside without a key. When th e driver's door is closed, the central locking a ctivates and the switch moves to the "UNLOC K" position.

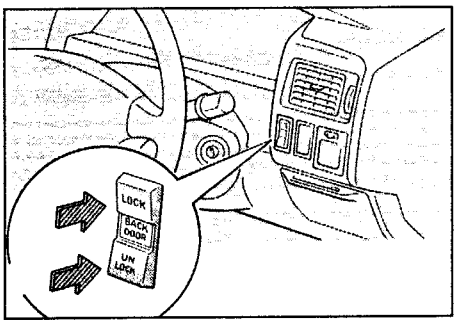

Filler cap lid

To open the filler cap lid, pull up the lever lo cated as shown in the illustration.

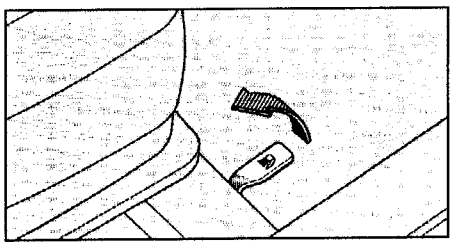

Headlight 2. To turn on, it is necessary to switch the fog light switch to the position shown in the illustrations. 2. To close the hood, it is necessary to release the hood prop, lay it down into the injector.

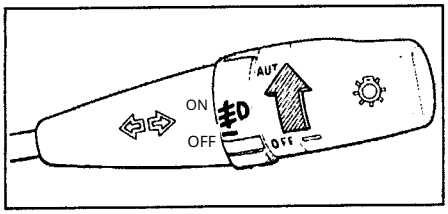

Fog lamps operate only when the headlig ht switch is in the OND or ON position. 3. The hazard warning lights are activated by pressing the button located as shown in the illustration.

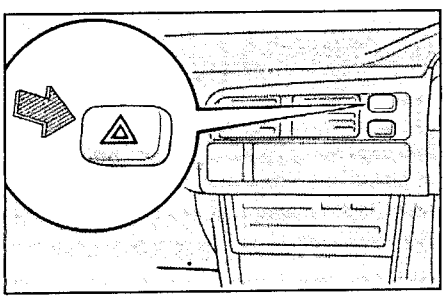

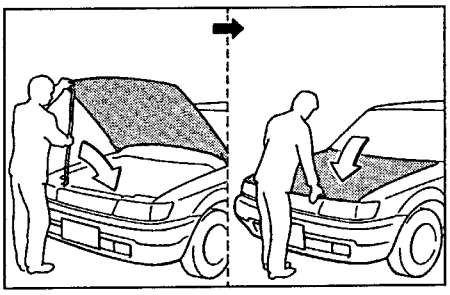

3. From the outside, the rear door lock is unlocked by turning the key to the left; to lock the lock, turn the key to the right.

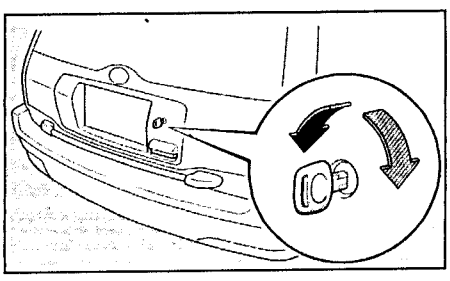

Seat position a djustment

1. To adjust the fore-aft position of the fro nt seats, lift the lever and slide the seat to the desired position. After adjusting, retur n the adjustment lever to its original positi on.

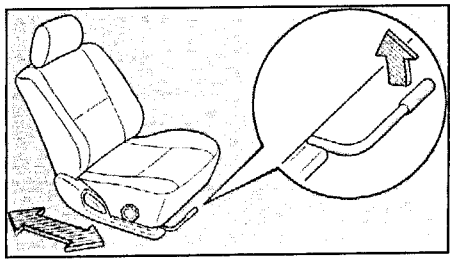

2. Adjustment of the front seatback position. Adjustment of the position of th e front seats.
To change the angle of the seatback lean forward slightly,
pull up the seatback lock lever,
then recline
back to the desired position and release the lever. The seatback will be locked in that position.

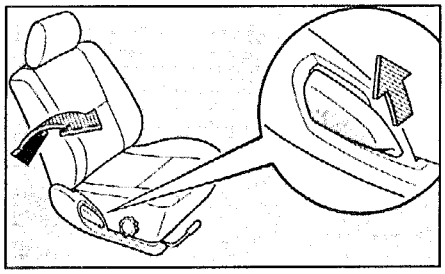

3. (Some models) The adjustment of the front seats' lumbar support has three fixed positions
that are controlled by a lever, as shown in the illustration.

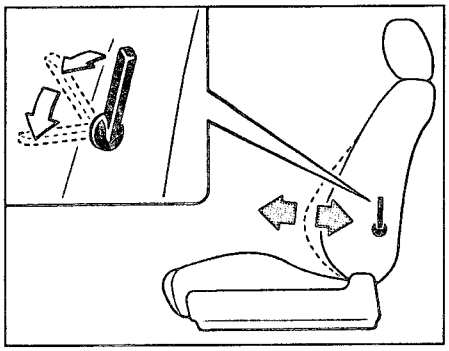

4. (Some models) The adjustment of the seat cushion side panels is carried out by turning the adjustment wheel as shown in the figure.

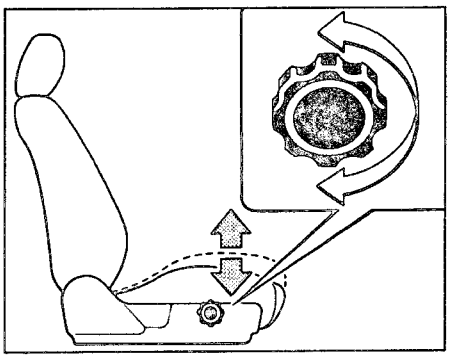

5. To adjust the position of the head rest, release the lock by pressing the latch (1), then select the desired headrest position (2).

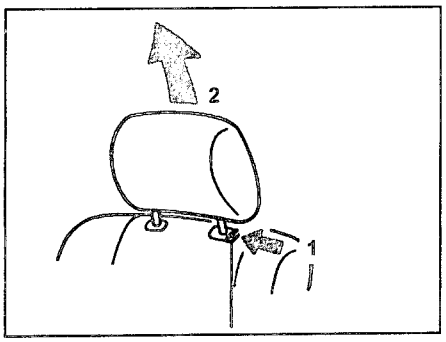

steering wheel

The adjustment of the steering wheel position is done mechanically. To adjust the vertical position of the steering wheel, pull the locking lever toward you, set the steering wheel to the required
my position.

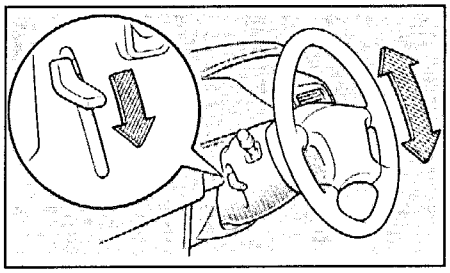

After adjustment, it is necessary to return the locking lever to its original po-
position.

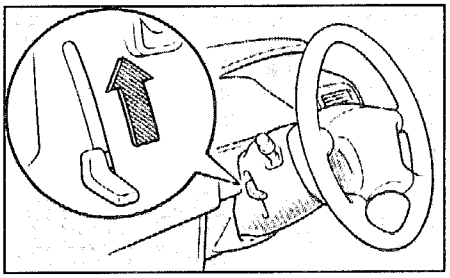

Mirror control The mirrors are adjusted from the control panel on the center console. The ignition key must be in the "ON" or "ACC" position.

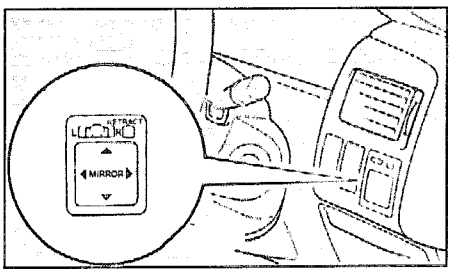

Automatic folding of the mirrors is performed by pressing the "RETRACT" switch, as shown in the illustration. To return the mirrors to the
The working position is also used
the "RETRACT" switch.

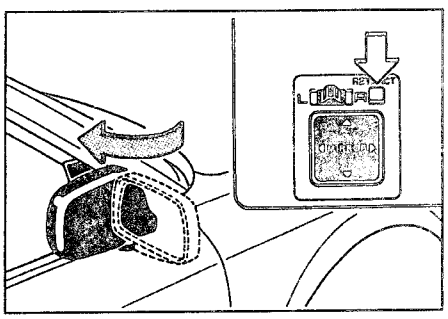

If you press on the mirror with your hand, it will automatically fold into the closed position.
It will fold.

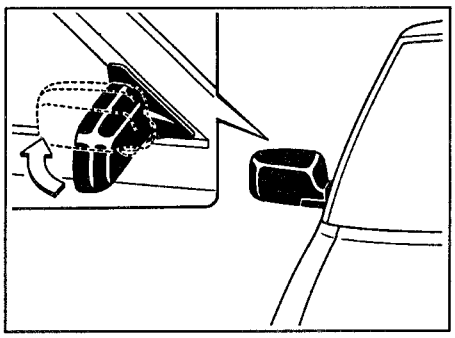

To select control of the right or left mirror, move the switch to the position: "R" for the right mirror or "L" for the left mirror. Further adjustment of the mirror position is carried out by pressing the corresponding sector of the mirror position switch. After completing the adjustment procedure, return the mirror control selector switch to the center
position.

Switch

windshield wiper and
washer

1. (Interval-adjustable switch for the wiper) To turn the wiper on and to stop it, move the switch to one of the following positions:

1st position — full stop; 2nd position — intermittent mode (every 3–12 sec); 3rd position — low-speed operation;

4th position — high-speed operation
speed.

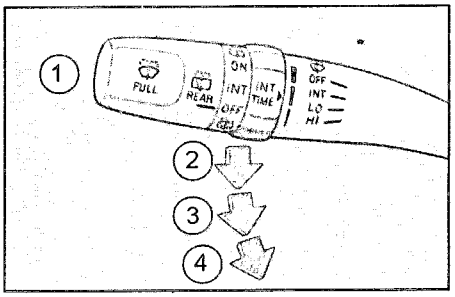

(Switch without interval adjustment To turn the wiper on and off, move the switch to one of the positions:)

Position 1 — full stop; Position 2 — intermittent mode (5-second interval);

3rd position — operation at low
speed;
4th position — operation at high
speed.

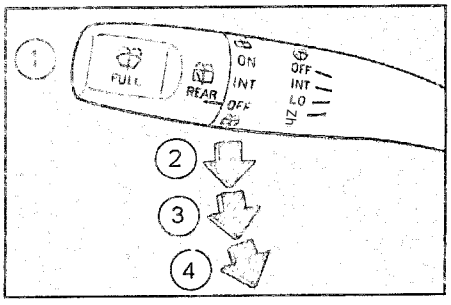

2. If you pull the lever toward you, The front windshield washer will operate, a nd after 1 second the windshield wiper will run for 2–3 strokes.

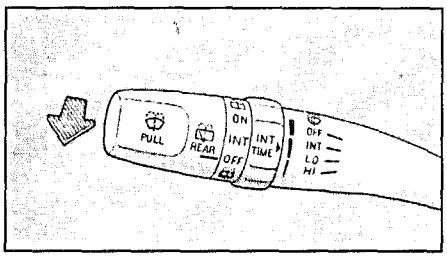

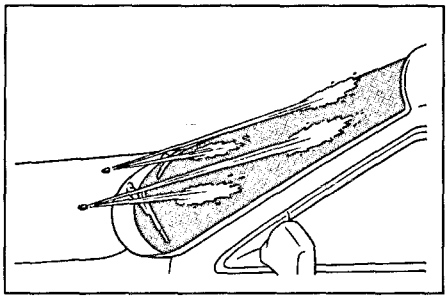

Note: if the washer does not operate, do not attem pt to turn it on again; instead check the washer pu mp.

The washer reservoir is located in the engine c ompartment.

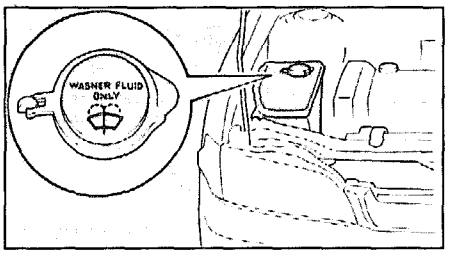

3. To turn the rear window wiper on and off, the switch must be moved to one of the posi tions:

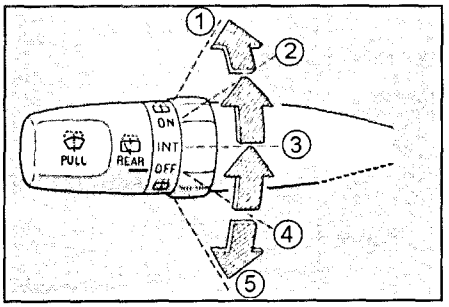

1st position — washer fluid spray and wiper op eration;

2nd position - low speed operation of the gear;

3rd position - intermittent mode (every 10–15 sec);

4th position - full stop; 5th position - washer fl uid spray and wiper activation.

Switch
wiper de-icer

On some models a wiper heating system is installed.

This system is activated by pressing the switch located as shown in the i llustration.

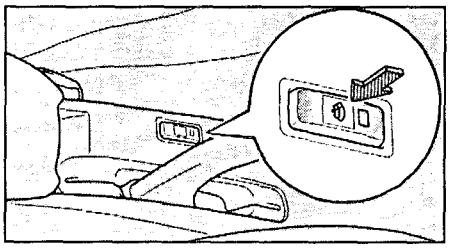

The system operates for 15 minutes, and then turns off automatically.
If it is necessary to force the system off, press the switch again.

Sunroof

1. To open the sunroof, press the "OPEN" s witch as shown in the illustration. The sunr oof will continue to open until the switch is pressed again.

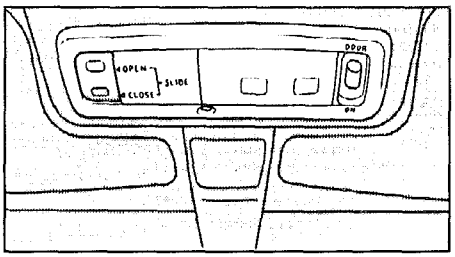

When opened the sunroof automatically the deflector extends.

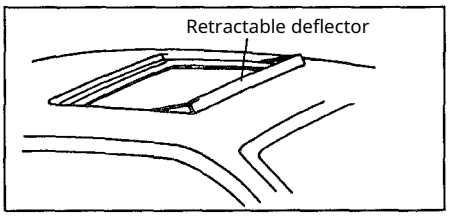

Whether the sunroof is open or closed, you can maneuver the sunshade.

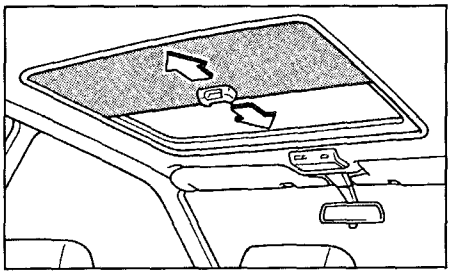

To close the sunroof press the "CLOSE" switch. The sunroof will continue closing until you press the switch again.

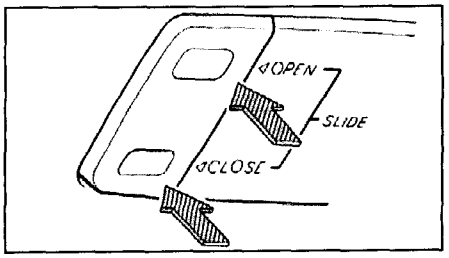

Heater controls

To turn on the air conditioner, it is necessar y to operate one of the "A/C" or "ECON" swi tches. When they are switched on, the indic ators light up. In the "ECON" mode, the air conditioner operates in an economical mod e. The heater operates when the air conditi oning mode is turned off.

1. The air flow direction control panel is designed to change the direction of the air flow. The heate r panel schematically shows the possible air flow directions:

- in this position the air flow is directed toward the head area.

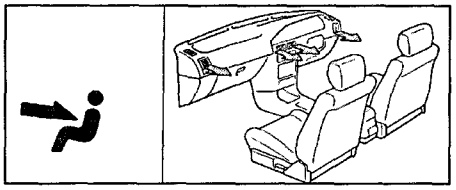

- in this position the air flow is directed to ward both the head and the floor areas si multaneously.

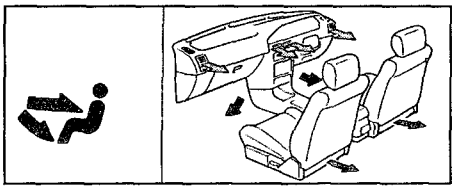

- in this position the airflow is almost entir ely directed toward the floor, on some mo dels during heating warmer air is directed at floor level while cooler air is directed to ward the head area.

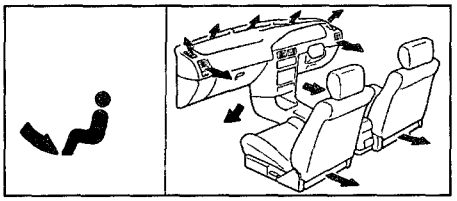

• in this position the airflow is directed t o the windshield, the front door window s, the head area and the floor; on some models a less heated airflow is directed toward the head area.

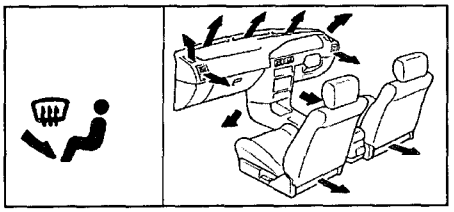

- in this position the airflow is directed to the windshield and the front door windows.

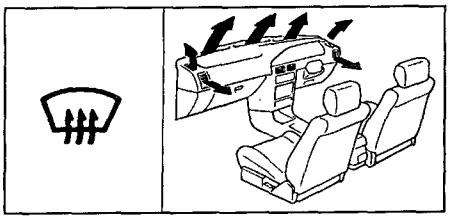

2. Air intake control lever (ventilation/recirculation) allows air to be drawn either from outside the vehicle or from the cabin.
3. On the airflow control panel there are fou r switches that differ in the strength of the a ir flow. In the "OFF" position the heater is of f; therefore, to turn it on you need to move the lever to any other

the position.
4. Temperature control lever. In the far left pos ition the temperature is the lowest; as it is mo ved to the right, the temperature increases ac cording to the markings on the panel.

heater, the temperature increases.
5. If the rear window fogs, you must press the rear-window defogger switch. The rear-window defogger operates for 15 minutes, and during its operation the indicator on the switch is illuminated. It can be forcibly turned off by pressing the switch again.

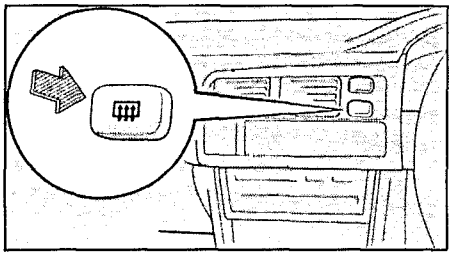

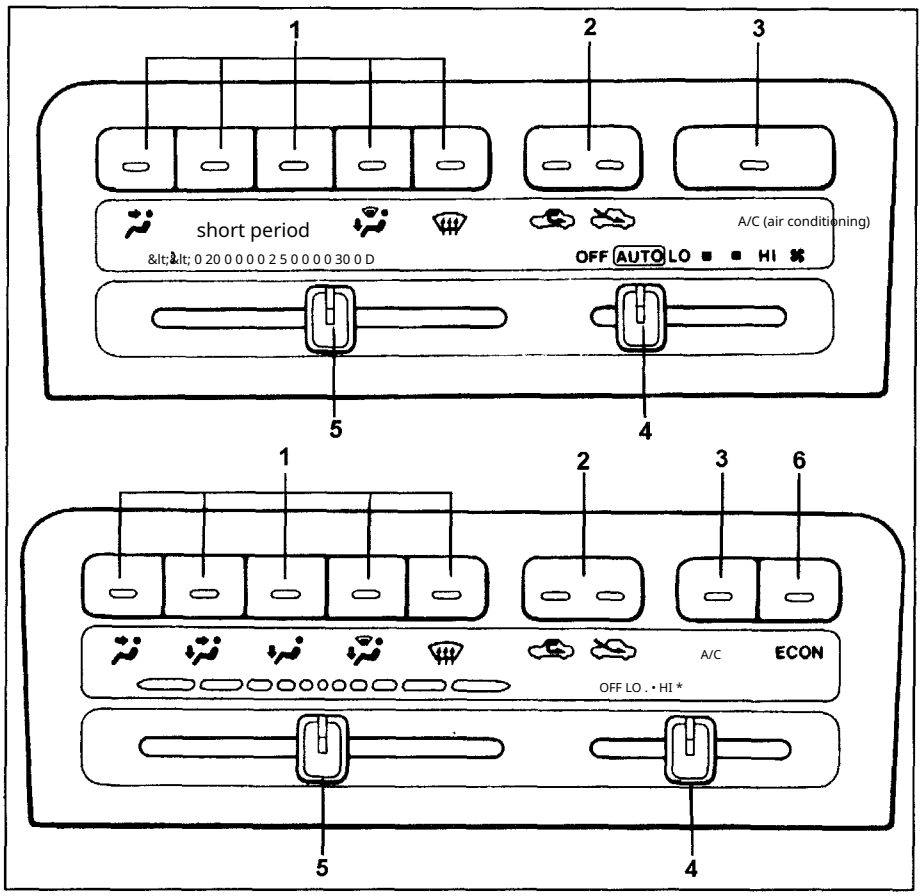

Possible heater and air conditioner control panels. 1 - airflow direction control panel 2 - temperature adjustment lever for air intake (ventilation/recirculation), 3' - air conditioner switch; 4 - airflow strength control lever, 5 - temperature control lever, 6 - economy-mode air conditioner switch.

Car radio

Volume adjustment

The volume is adjusted With the regulator pulled out to positio n 1 (you need to press it for this). Bala nce adjustment

The balance of the right and left chan nels is adjusted by knob 11 "BAL/FADE " when it is half-depressed (a single pr ess of the knob).
The balance between the front and rear speakers is adjusted with knob 11 "BAL/F ADE" when fully pressed (press the knob once more). Equalizer

Pressing button 13 "ACS" selects the equa lizer settings to standard music programs .

Mode	Setting
CLASSIC	equalizer is turned off
ROCK	boost of low and high frequencies
POPS	boost of high frequencies
JAZZ	boost of low and high frequencies
VOCAL	mid-frequency boost man
DEFEAT	ual tone adjustment mode

Manual tone adjustment
Manual adjustment is possible if equalizer is in mode B "DEFEAT". Adjustment is made with knob 12 "BASS/TREB".
The low-frequency tone is adjusted wit h the knob in the half-pulled position (one press of the knob). The high-frequency tone is adjusted with t he knob in the fully pulled position (pr ess the knob once more).

Radio
Pressing the "AM/FM" button twic e Turns the radio on by pressing t he button The button switches th e AM/FM band. Tuning ra dio stations Press button 13 until a beep sounds (automatic station search will start). The search will st op when a stable signal is found. I f the signal is weak and the autom atic search does not lock onto a st ation, press the tuning button aga in (the automatic search will turn off) and tune manually—
one step at a time.
Programming presets The prese ts for the most frequently listened-to ra dio stations can be stored in memory. T o do this, tune to the desired radio stati on, then press and hold one of the butt ons (5 - 10) until a beep sounds. Switchi ng to a preset station is done by briefly pressing the corresponding button.

Note: With prolonged the head unit' s memory will be erased, and in the absence of backup batteries the fact ory settings will be restored. "Favor ite station"
You can assign the most frequently listened-to radio station to a dedicated button 14. When this button is pressed
When the button is pressed, this station turns on immediately, regardless of which device worked before that.
Note: On new head units the wave is set to 1620 kHz.
Tuning
Use the tuning buttons to tune to the desired radio station, then press and hold button 14 until you hear a beep.
Note: While receiving a traffic information broadcast, the tuning and station selection buttons do not operate. First you must turn off reception by pressing button 14 again.

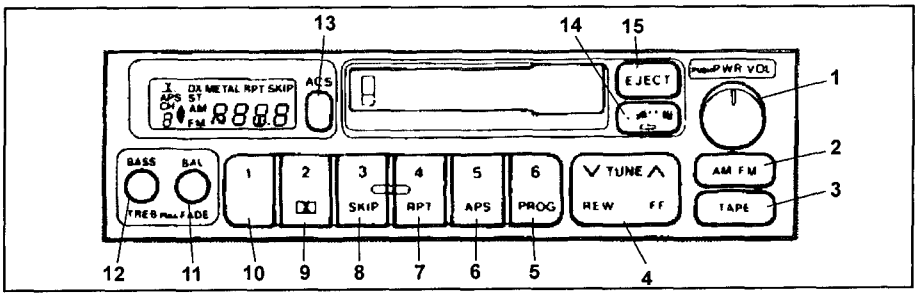

Magnetic tape player

Switching the car stereo to tape mode is done with button 4 "TARE". Playback and stopping of the cassette are controlled by pressing button 1 "PWR".

To eject the cassette, press button 15 "EJECT".

Noise reduction system

When playing cassettes recorded using the DOLBY B NR noise reduction system, turn this system on by pressing button 12 "DOLBY". To turn the noise reduction system off, press the button again.

Reverse

Change of playback direction

pressing to eject the cassette is carried out—press button 5 "PROG".

Rewind

To rewind, press button 4 (rewind - "REW", forward "FF"). To stop rewinding, press the rewind button 4 again or press button 3 "TARE".

Track search

This function is intended to jump to any of the 9 tracks located before or after the current playback position.

To do this, press button 6 "APS" as many times as the number of tracks you need to skip (when skipping backward take into account the current track). After that, press the rewind button 4 (to go back - REW, forward - FF). To stop rewinding, press the rewind button again, or press button 3 "TARE".

Note: if the pause between tracks is less than 3 seconds or there are extraneous noises, this function may not operate correctly.

Repeat track

To play the current track repeatedly, press button 7 "RPT". To cancel repeat, press the button again.

Note: if the pause between tracks is less than 3 seconds or there are extraneous noises, this function may not operate correctly.

Skip silent sections

This function is intended for pe- Filling in gaps on the cassette. To enable, press button 8 "SKIP". To disable the function, press the button again.

Note: this function may operate incorrectly if:

- The pause between recordings is less than 15 seconds.
- There are extraneous noises between recordings.
- The start and end of a recording cannot be clearly determined.

Clock

Time is set by pressing the control buttons located on the display panel: Press the ":00" button to set the minutes. If you need to set from 0 to 29 minutes, press the V (M) button; if from 30 to 59 minutes, press the ▲ (H) button.

When "H" is pressed, the required hour of the day is set; minutes are set in the same way.

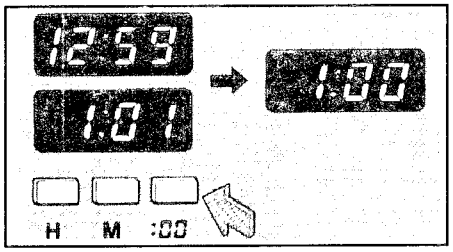

Additional informational display

The following information is shown on the auxiliary display:

- ambient temperature;
- navigation system readings;
- barometer.

Temperature of the ambient air

The vehicle is equipped with a system that allows the ambient air temperature to be determined. The display shows the ambient air temperature in °C with the label "OUT SIDE". Navigation system The navigation system allows you to determine the direction of vehicle travel.

The accuracy of the compass depends on your location (underground garages, tunnels, in the city, etc.). Compass calibration is performed as follows: Press the "COMPASS ADJUST" button and turn the vehicle 180° at a speed of less than 10 km/h in an open area (so nothing hinders the turn) in any direction.

After completing the check, read the compass readings.

Anti-lock braking system (ABS)

Warning: use tires of the same size, construction, and load capacity as the vehicle's original tires, because using tires of a different type may interfere with the normal operation of the anti-lock braking system (ABS).

of acceleration or braking on a slippery surface and provides stable vehicle handling.

2. The anti-lock braking system (ABS) engages when the vehicle speed exceeds 10 km/h and disengages when the vehicle speed falls below 5 km/h. 3. When driving the vehicle, observe the following precautions:

a) The operation of the ABS system may be felt as a slight vibration in the brake pedal. Do not pump the brake pedal to stop; simply press it more firmly. Pumping the brake pedal will increase the stopping distance.

b) Braking effectiveness depends on the tires' grip on the road surface. On slippery road surfaces, even when the ABS system is operating, the driver cannot always control the vehicle at high speed or while performing maneuvers.

c) Always maintain a safe distance from the vehicle ahead. Compared with vehicles without an ABS system, your vehicle's braking distance will be longer in the following situations.

- When driving on rough roads covered with gravel or snow. When driving on roads that have potholes or other variations in road surface height.

4. When the ignition is turned on, the ABS indicator on the instrument cluster lights up for three seconds. If there is a malfunction in the ABS system, the indicator stays on continuously.

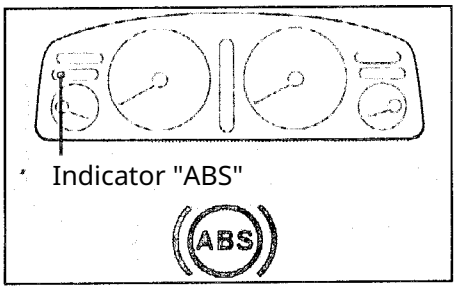

Operation

Driving a vehicle with an automatic transmission Note: The transmission type is indicated on the aluminum plate located next to the vehicle identification number. The gear selector for controlling the automatic transmission is installed on the center console beside the driver. The selector is connected by a cable to the valve block, and it is used to select the range of gears to be used. To prevent damage

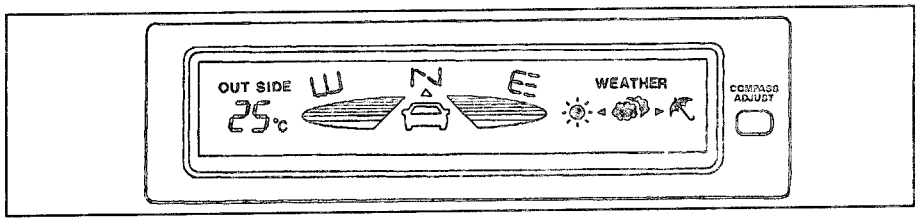

Additional information display.

When selecting the range incorrectly on the automatic transmission (for example, moving from "D" to "R" while moving forward), a lock on the selector is installed, which must be pressed to allow "dangerous" shifts. The lock helps prevent situations where, through carelessness, one of the prohibited driving ranges could be engaged.

The selector has six positions: "P", "N", "R", "D", "2" and "L".

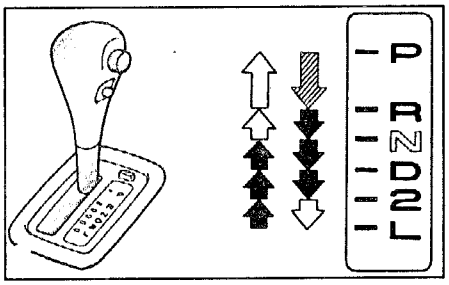

When shifting you must press the detent

When shifting to the detent pressing is not required

When shifting you must press the detent and the brake pedal

Position "P
" Selected for long-term parking of the vehicle. In this position all control elements in the gearbox are disengaged and its output shaft is locked; the vehicle cannot move. Moving the lever to this position is allowed only when the vehicle is completely stopped. Shifting the lever to "P" while driving will cause gearbox damage.

Position "R"
Reverse. Move the selector lever to
The range can be shifted into this position only when the vehicle is stationary. Shifting the lever into the "R" position while moving forward can cause damage to the gearbox and other transmission components. Position "N"

Matches the neutral position. In the gearbox all elements are switched off
The control, which ensures the absence of a rigid kinematic connection between its driving and driven shafts. The output-shaft lock mechanism is therefore disengaged, i.e., the vehicle can move freely.
It is not recommended to move the range selector lever to the "N" position while coasting (by inertia).
Never switch off the ignition when moving downhill. Such a practice is dangerous because you may lose control of the vehicle.
Position "D"
Main driving mode. It provides automatic shifting from first through fourth gear. Under normal driving conditions, it is recommended to use this mode. Position "2"

Movement is permitted only in first and second gears. It is recommended to be used, for example, on winding on mountain roads. Shifting into third and fourth gears is prohibited. In this range, the engine braking mode is used effectively. Position "L"

Movement is allowed only in first gear. This range allows the engine braking mode to be used to the fullest. It is recommended for driving on steep descents, ascents, and off-road. "OR" mode

The authorization to use the fourth, overdrive, gear is carried out using a special "O/D" button located on the selector.

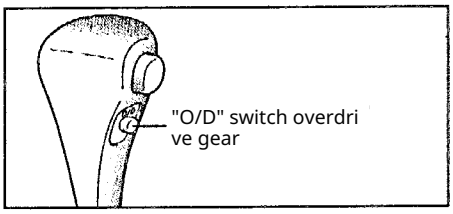

If it is in the depressed position and the range selector lever is set to "D", then shifting into the overdrive gear is permitted. Otherwise, engaging the fourth, overdrive, gear is prohibited. The state of the control system is indicated by the "O/D OFF" indicator. When overdrive use is permitted, the indicator is off; when it is prohibited, the indicator lights up. This mode is used when driving on good roads. Whenever possible do not use this mode in city driving — it excludes the overdrive gear from operation, especially during winter driving. Overdrive exclusion allows more effective use of engine braking. Do not engage O/D mode when the vehicle is fully loaded. If frequent shifts between 3 and 4 occur, which increase wear of automatic transmission components, turn off O/D.

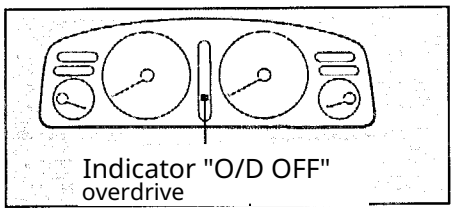

Attention: If the automatic transmission fluid overheats, the A/T OIL TEMP indicator lights up on the instrument cluster.

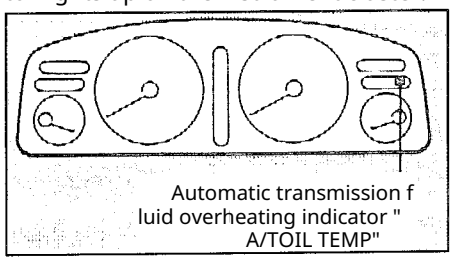

Special programs
The control system includes several programs: the "SPORT" program "POWER", the economical "NORMAL", and the winter "MANU".

The selection of the control program is carried out by the program selection switch the automatic transmission control, located as shown in the illustration.

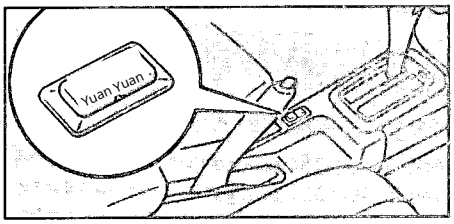

When a program is selected, the corresponding indicator lights up on the instrument cluster.

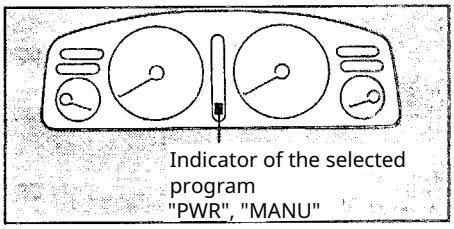

"Sport" program This program is configured for maximum use of the engine's power (switch "PWR"). Therefore, upshifts occur around the engine's maximum revolutions at which the engine develops maximum power. In this case the vehicle accelerates with significantly greater acceleration. When this program is selected, the "PWR" indicator lights up on the instrument cluster. "Economic" program The program is configured to ensure driving with minimal fuel consumption

fuel. In this case upshifts occur approximately when the engine reaches medium-range revolutions, which corresponds to a minimum on the fuel consumption characteristic. In this case driving has a smooth, calm nature.

The "MANU" ("winter") program
The program is intended to facilitate winter driving. If the "2" position is selected, the vehicle will start in second gear — this allows starting without wheel spin.

The "MANU" switch is used to enable this program. When this program is selected, the corresponding indicator lights up on the instrument cluster.

Features of the transmission of 4WD models When the differential is locked observe the following rules:

- with the inter-axle differential lock engaged the maximum vehicle speed is 60 km/h,
-
- travel time with the inter-axle differential locked no more than 1 hour.

Attention: to avoid damage to transmission components, for 4WD models towing by the loading method (lifting and partially raising only one of the vehicle's axles) is prohibited.

4WD vehicles have a permanent all-wheel drive, so-called "Full-time 4WD" (a system with an inter-axle differential). This allows optimal distribution of torque between the wheels, but when towing there may be a situation where the torque is transmitted only to the wheel with the least traction. The inter-axle differential lock is intended to prevent this situation. The "C.DIFF LOCK" indicator lights on the instrument cluster when the lock is operating.

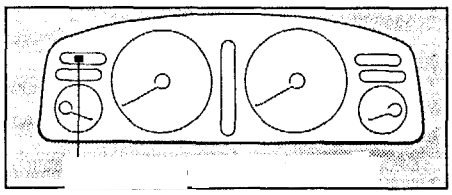

Automatic-transmission models are equipped with an automatic inter-axle differential locking system "C-DIFF AUTO". When the "C-DIFF AUTO" button is pressed, a signal is sent to the electronic control unit for the Differential Lock permitting locking and, under the required conditions, the control unit activates the hydraulic actuator located in the transfer case and "rigidly" locks the inter-axle differential. This leads to equal distribution of torque to the front and rear axles, which significantly improves cross-country capability.

These vehicles have poorer off-road capability compared to vehicles with manual differential-lock systems. This is because the viscous coupling does not provide 100% locking and the coupling engages with a slight time delay.

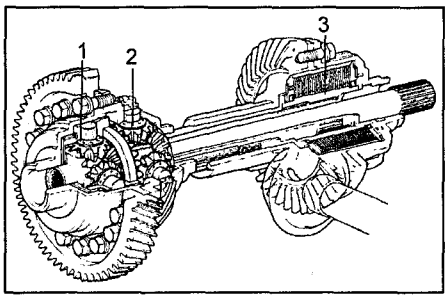

Full-drive diagram with viscous coupling. 1 — inter-wheel differential, 2 — inter-axle differential, 3 — viscous coupling. On models with a manual inter-axle differential lock system, the "C.DIFF.LOCK" switch is located on the instrument panel.

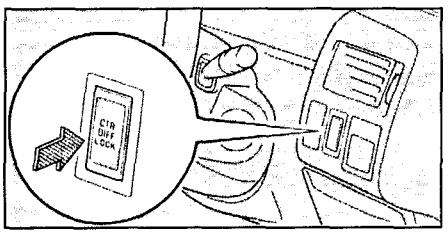

When the switch is pressed, the pneumatic driven actuator located on the transfer case "rigidly" locks the inter-axle differential.

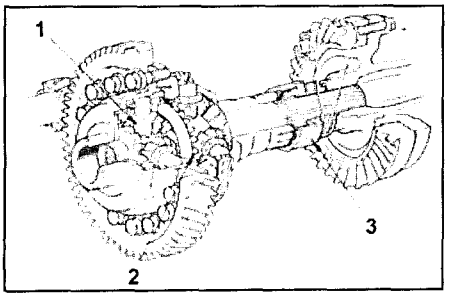

Full-drive diagram with mechanical locking. 1 — inter-wheel differential, 2 — inter-axle differential, 3 — inter-axle differential lock clutch.

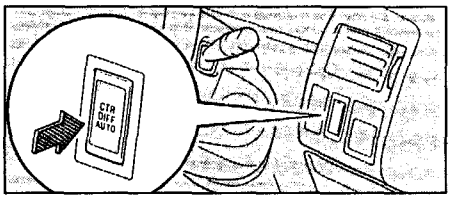

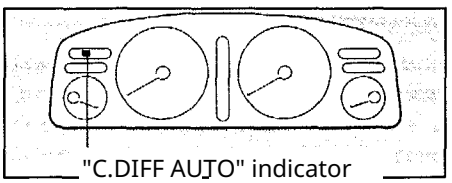

"C.DIFF AUTO" indicator

Driving tips in various conditions

General recommendations

Attention:

- Before starting to drive, make sure that the parking brake is fully released and that the corresponding indicator has gone out.

- Do not keep your foot on the brake pedal while driving. This can lead to dangerous overheating and excessive wear of the brake discs and pads.

- When driving down a long or steep slope, use engine braking. Remember that if you overuse the brakes, they can overheat and may not function properly.

- Be careful when accelerating or braking on slippery roads. Sudden acceleration or engine braking can cause the vehicle to skid or lose control.

- Avoid driving through water obstacles of great depth, as a large amount of water entering the engine compartment can cause damage to the engine or electrical components.

1. Always reduce speed in strong headwinds. This will allow you to control the vehicle much better.

2. Washing the vehicle or crossing water obstacles can cause the brakes to become "wet." To check, after making sure there is no traffic near you, lightly press the brake pedal. If you do not feel normal braking, the brakes are likely "wet." To dry them, drive cautiously while lightly pressing the brake pedal with the parking brake engaged. If the brakes still do not work reliably, consult a service center. 3. Slowly drive onto a curb and, if possible, do so at a right angle. 4. When parking on a slope, turn the front wheels so they rest against the slope to prevent the vehicle from rolling. Engage the parking brake and set the selector to "P" (for automatic transmissions) or the gear lever to first gear or reverse (for manual transmissions). If necessary, place chocks under the wheels. 5. Do not use the parking brake if there is a possibility it may freeze, because snow or water accumulated around the parking brake mechanism can freeze and make it impossible to release. When parking, set the selector to "P" (automatic transmission) or place the shift lever in first gear or reverse gear (manual transmission), and position wheel chocks under the rear wheels.

6. Do not allow ice and snow to accumulate in the wheel arches. Ice and snow that have built up in the wheel arches can impair vehicle handling. When operating in winter conditions, peri- Periodically check the wheel arches and remove accumulated ice and snow.

Towing the vehicle

Warning: It is strictly prohibited to tow 4WD vehicles by partial loading, i.e., by lifting one of the vehicle's axles.

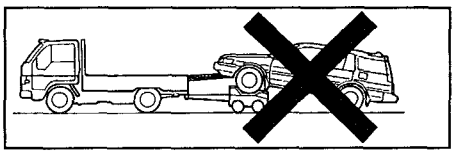

Warning: Towing vehicles with an automatic transmission is permitted at speeds not exceeding 30 km/h for distances not exceeding 50 km.

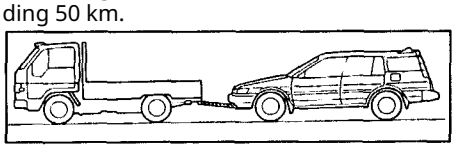

If towing over a longer distance is necessary, carry it out either by full loading or by partial loading with the rear axle raised.

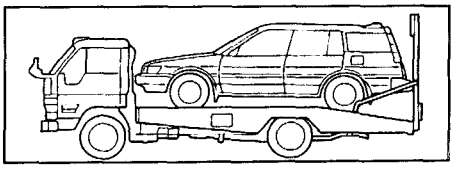

(2WD models) Exercise extreme caution when towing the vehicle. Avoid sudden st arts and sharp maneuvers that may place excessive strain on the tow rope or chain . Loops, the tow rope, or the chain may sn ap and cause serious injury or damage.

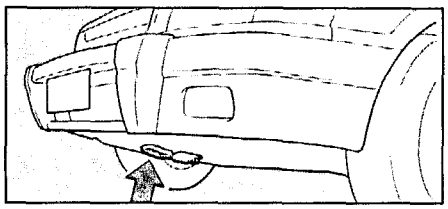

When towing the vehicle, perform the follow ing operations:
1. Release the parking brake. 2. S et the gearshift lever to neutral (manua l transmission) or the selector to "N" (a utomatic transmission).

3. The inter-axle differential must be u nlocked (the button not pressed, the c orresponding indicator not lit). 4. The ignition key must be in the "ACC" positi on (engine not running) or "O" (engine running). Note: if the engine is not running, the booster systems for the b rakes and steering will not operate, so the effort required on the controls will be considerably greater than usual.

4. Exercise caution while towing a st uck vehicle. Stay away from the vehi cles and the tow cable.

Engine Start

Turn the ignition key to the "ON" position . Without pressing the accelerator pedal, crank the engine by turning the ignition key to the "START" position. Release the i gnition key when the engine starts. Cauti on: Do not crank the engine for more than 15 seconds at a time. This ma y cause the starter and electrical connecti ons to overheat. If the engine does not st art within 15 seconds, wait about one mi nute before attempting again.

3. After the engine's elevated warm-up RPMs have automatically decreased a nd the engine has warmed up, the ve hicle is ready to drive. Note: If the wea ther is frosty, leave the engine to war m up for a few more minutes before st arting to drive. However, if necessary, you may begin driving immediately after the elevated warm-up engine RPM decreases.

If the engine does not start...
1. Before performing inspections, make sure there is a sufficient amount of fuel in the tank.
2. If the engine crankshaft does not rotate or rotates too slowly:
a) Check that the battery terminals ar e securely tightened and clean.

b) If the battery terminals are in good condition, turn on the interior lightin g. If the lighting is absent, dim, or go es out when cranking the engine with the starter, the battery is discharged. Start the vehicle using an auxiliary ba ttery or by push-starting (towing). If t he battery is too heavily discharged, t he engine may not start by towing. c) If the lighting is normal but the engin e does not start, the engine is faulty.

Attention: Do not attempt to start the e ngine by prolonged towing or pushing. The timing belt may jump several teeth and cause piston-to-valve contact. In ad dition, the catalytic converter may be da maged, overheat, and become a cause of ignition (fire). 3. If the engine cranksh aft rotates normally but the engine doe s not start:

a) Check the tightness of the connect ors (for example, the connections of t he spark plugs, the ignition coil, the d istributor).
b) If the connectors are in good condition, the spark plugs may be "flooded" due to r epeated cranking of the engine's cranksha ft.

Starting the engine (if the spark plugs are "flooded")
1. By pressing the accelerator pedal, t urn the engine crankshaft by moving t he ignition key to the "START" position for approximately 15 seconds. Do not pump the pedal; simply hold it down.

2. Release the ignition key and the acc elerator pedal. Then try to start the en gine without pressing the accelerator pedal.
3. If the engine does not start after turnin g the crankshaft for 15 seconds, release t he ignition key and wait a few minutes. If the engine still does not start: 4. Try to s tart the engine.

a) Unscrew the spark plugs and dry the w et electrodes.
6) Turn the ignition key to the "START " position for approximately 15 secon ds while keeping the accelerator ped al depressed.
c) Install the spark plugs.
5. Try to start the engine, but do not by pressing the accelerator pedal.
If the engine still does not start, the n it is faulty and requires adjustmen t or repair. Caution:
do not rotate the engine crankshaft for more than 15 seconds at a time. This may cau-
could lead to overheating of the starter and of the electrical circuit connections.

Starting the engine using an auxili ary battery Caution: the voltage of the auxiliary battery must be 12 V. D o not attempt to start the engine usi ng an auxiliary battery unless you a re sure its specifications meet the re quired parameters.

1. Turn off all unnecessary lighting fixtures and auxiliary equipment- ventilation, and make sure that the vehicles do not touch each other.
2. If necessary, remove all vent caps f rom the auxiliary and discharged batt eries. Lay a cloth over the open vent holes on the batteries (this helps redu ce the risk of explosion). 3. If the vehi cle's engine will not run with the auxil iary battery, start the e ngine and let it run for a few minutes-. While starting with the auxiliary batt ery, the engine should run at approxi mately 2000 rpm. 4. Connecting the c ables.

a) Make the cable connections in the se quence shown on in the figure.

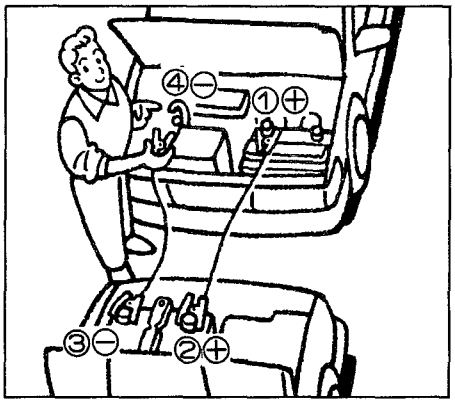

Note: To avoid serious injury when m aking connections, do not lean over t he battery and do not allow accident al contact of the cables or clamps wit h anything other than the correspon ding battery terminals or "ground".

b) Connect the clamp from the other e nd of the negative cable of the auxiliar y battery to a solid, stationary, unpaint ed metal part of the engine of the vehi cle with the discharged battery (the rec ommended connection point is shown in the illustration).

Attention: do not connect the cable nex t to any part that may move when turni ng the engine crankshaft. 5. Start the e ngine in the usual way and run it at 2 000 rpm for several minutes. After start ing, it should run for several minutes.
6. Carefully disconnect the cables, negat ive first, then positive.

7. Carefully remove the covers over the ba tteries, as they may contain sulfuric acid. If the vent caps were removed, reinstall them in their places.

Engine malfunctions while driving
Engine stopping while driving
1. Gradually reduce speed. Move the vehicle to a safe location.
2. Turn on the hazard warning lights.
3. Try to restart the engine.

Note: With the engine not running, the brake booster and power steering will n ot function, so steering and the braking system will require greater effort from the driver than usual.

Engine overheating

Note: if the engine coolant temperature gaug e indicates overheating, you experience a loss of power, or you hear a light metallic knockin g noise, the engine has likely overheated.

1. Move the vehicle to a safe location. Set th e selector to "P" (automatic transmission) or place the gearshift in neutral (manual trans mission) and engage the parking brake. Tur n off the air conditioner if it is in use. 2. If co olant or steam is escaping from under the hood, stop the engine. Before opening t he hood, wait until the boiling subsides. Atte ntion:

- If the coolant is not spurting or splashing o ut, leave the engine running.

- To avoid thermal burns, keep the hoo d closed until steam stops escaping. Esc aping steam or coolant indicates very hi gh pressure.

3. Make sure the electric fan is operating. Visually check for obvious leaks from the radiator, hoses, and under the vehicle. N ote: water dripping from the air c onditioner is normal when it is running f or cooling. Attention: be careful—when t he engine is running, keep hands an d clothing away from the fan and drive b elts.

4. If there is a coolant leak, stop the engine im mediately.

5. If there are no leaks, check the expansi on (overflow) tank. If it is empty, add cool ant while the engine is running. Fill it to a bout halfway. Note: do not attempt to re move the radiator filler cap when the e ngine and radiator are hot. Severe burns can result. 6. After the coolant temperatu re returns to normal, check the coolant le vel in the expansion tank again. If ne cessary, top it up to half. A large loss of c oolant indicates a leak in the engine cooli ng system.

Wheel replacement

1. If a wheel needs to be replaced while driving, gradually reduce speed and move the vehicle to a safe location.

2. Stop the vehicle on level ground with firm sur face.
3. Turn off the engine and turn on the haz ard warning lights.
4. Securely set the parking brake and move the gear shift lever— shift the transmission into reverse (manu al gearbox) or move the selector to "P" (a utomatic gearbox). Note: if necessary, lock the wheel diagonally opposite to the one that will be replaced. 5. Remove the spare wheel by taking off the cover and unscrewing the retainer.

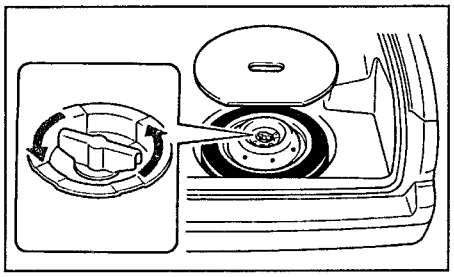

6. Replace the wheel.
a) Remove the decorative cap (if installed).
b) Loosen the nuts securing the wheel to be replaced by one full turn. c) Position the jack next to the re-

Replace with the spare wheel in the position temporarily occ upied in the illustration.

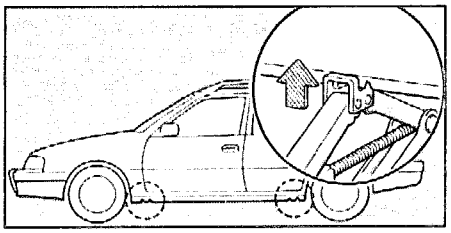

Note:
- Ensure that the jack is correctly positi oned. Lifting the vehicle with a jack that is incorrectly positioned may cause dam age to the vehicle or cause it to slip off t he jack.

- Never be under a vehicle if the vehi cle is supported only by a jack. - Use the jack only to lift the vehicle whil e preparing to

change the wheels.
• Do not lift the vehicle if anyone is insid e.

g) While turning the jack handle, lift the vehi cle, loosen the wheel mounting nuts, and re move the wheel.

Note: lift the vehicle only to a heigh t sufficient for removing or replaci ng the wheel.

d) Before mounting the wheel, remove c orrosion from the mounting surface usin g a wire brush or a similar tool. Mountin g the wheel without good metal-to-meta l contact on the mounting surface may le ad to loosening of the wheel nuts and ev en cause the wheel to detach while driving. Therefore, after the first 1,600 km of drivin g, check the tightness of the nuts. When replacing tires, use only tires of identical size a nd construction that are recommended for

your vehicle.

ation.

e) Install the spare wheel and tighten t he fastening nuts by hand. Pay special attention to the nuts that are tapere d for centering, making sure the taper faces inward.

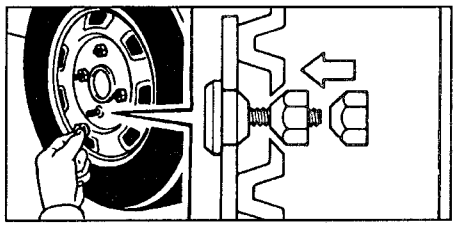

g) Lower the vehicle and tighten the whe el lug nuts in the sequence shown in the illustration. When tightening the nuts, d o not use a cheater bar or step on the wr ench.

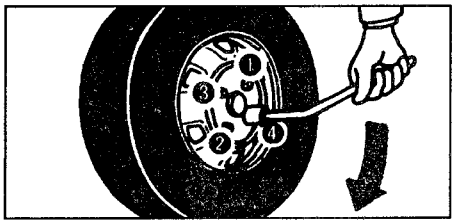

7. Check the air pressure in the installed tire . Note: do not forget t o install

Put the valve cap back in place on the tire, as dirt and moisture can enter the valve, which may lead to an air leak.
8. Before starting to drive, make sure that all tools, the jack, and the spare wheel are securely stored in their designated locations to reduce the risk of injur y during a collision or sudden braking.

Recommendations for choosing tires

When selecting tires, pay attention to the mar kings. The geometric dimensions, load capacit y, and maximum speed must strictly conform t o the manufacturer's recommendations. The b ead diameter of the chosen tire must match t he bead diameter of the wheel. Tires come in several types

(road, all-purpose (all-season-ные), winter, enhanced off-road capab ility. The tire type is chosen based on op erating conditions.

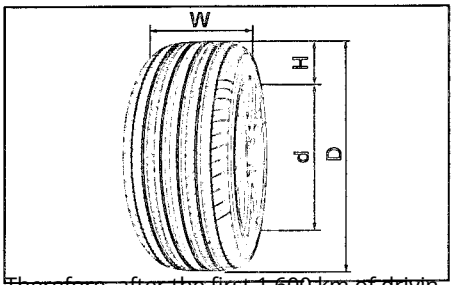

for your vehicle and with equal or great er load-carrying capacity. Using tires of any other size or type may seriously

affect handling, comfort, the accuracy of t he speedometer/odometer readings, grou nd clearance, fuel economy, the distance b etween the body and the tire, or the comp atibility with traction chains. Warning: Do not mix radial and bias-ply tires. This c an cause dangerous vehicle behavior leadi ng to a loss of control.

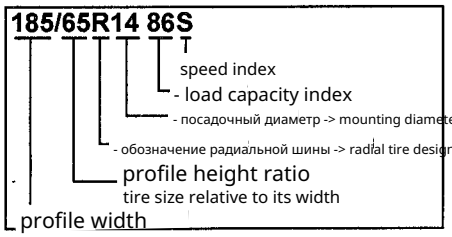

The marking may contain one of the follo wing designations:

185 is the nominal section width of the tire, expressed in millimeters. This di mension is selected based on the vehic le manufacturer's recommendations.

65 is the ratio of the tire section height to its width, expressed as a percentag e (%).

$$= \frac{H}{W} \times 100\%$$

If this designation is absent, the ratio i s 0.80...0.82. This dimension is s elected based on the vehicle manufact urer's recommendations.

manufacturer.

R denotes a radial tire; B denotes a bias (diagonal) tire. Radial and bias tires diff er in the arrangement of the cord plies. R adial tires have lower rolling resistance a nd a longer service life compared with bia s tires.

14 is the tire rim diameter, expresse d in inches. This dimension is selecte d based on the vehicle manufacturer' s recommendations.

86 is the load index. It is selected based on the vehicle manufacturer's recomme ndations. § is the tire speed rating . It is selected based on the vehicle man ufacturer's recommendations.

Checking tire pressure

and tire condition

1. Regularly inspect the tires for any d amage. Check the tire pressure every t wo weeks or, at minimum, once a mon th. Do not forget to check the pres-

tire in the spare tire.

Tire pressure (when cold):

185/65 R14 86S,
175/65R14 82S..... 210 kPa
185/60 R14 82H ..... 220 kPa

Recommended by the manufacturer TOYOTA tire pressure for the modification of your vehicle can be viewed rearrange on the plate located on the door pillar.

Note: When transporting heavy loads, the pressure in the rear tires should be increased by approximately 0.5 kPa.

Table of tire load index values. Index Load, kg I

ndex			Load, kg	Index	Load, kg
61	257	81	462	101	825
62	265	82	475	102	850
63	272	83	487	103	875
64	280	84	500	104	900
65	290	85	515	105	925
66	300	86	530	106	950
67	307	87	545	107	975
68	315	88	560	108	1000
69	325	89	580	109	1030
70	335	90	600	110	1060
71	345	91	615	111	1090
72	355	92	630	112	1120
73	365	93	650	113	1150
74	375	94	670	114	1180
75	387	95	690	115	1215
76	400	96	710	116	1250
77	412	97	730	117	1285
78	425	98	750	118	1320
79	437	99	775	119	1360
80	450	100	800	120	1400

Table of tire speed ratings.

Speed rating		Maximum speed, km/h
L		120
P		150
Q		160
R		170
S	SR	180
T		190

Speed index		Maximum speed, km/h
U		200
H	HR	210
V		240
	ZR	more than 240
W		270
Y		300

Note:

- The lower the tread height, the greater the risk of tire slipping. The effectiveness of tires for driving on snow is significantly reduced if the tread wears down to a height less than 4 mm.
- Incorrect tire pressure can shorten its service life, and your vehicle's handling becomes less safe.
- Underinflation leads to excessive tire wear, an increased likelihood of puncturing overheated tires, poor handling, and higher fuel consumption.
- If the tire pressure is very low, the wheel may be deformed and/or the tire may have separated.
- Overinflation of the tire leads to reduced comfort, handling issues with the vehicle, and increased wear of the central tread area of the tire.

2. Pressure should be checked only when the tires are cold. If the vehicle has been parked for at least three hours, the gauge readings will be accurate.

Attention:

- Always use a pressure gauge. The appearance of the tire can be misleading.
- Do not forget to replace the tire valve cap, b ecause dirt and moisture can enter the valve, which may lead to air leakage.

Tire replacement

1. When replacing tires, use only tires of the same size and construction as o riginally installed, and with the same or greater load rating. Do not use tires wit h an altered tread pattern. load-carrying capacity. Using a tire of any other size or type may seriously affect handling, comfort, the accuracy of the speedometer/odometer readings, clearance, the distance between the body and the tire, or the anti-slip chain.

Warning: Do not mix radial and bias-ply t ires. This can cause dangerous vehicle be havior leading to loss of control. 2. It is re commended to replace all four tires or, a t a minimum, both front o r both rear tires at the same time.

menno.

3. After a tire repair, the wheel must be b alanced. 4. Every 5,000 km, r otate the tires according to the pattern sh own in the figure:

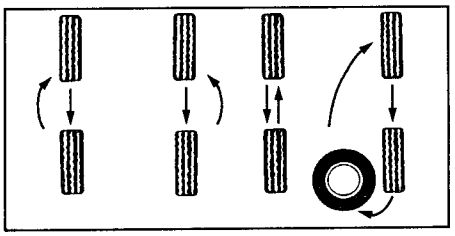

When using tires with a directional tread pa ttern.

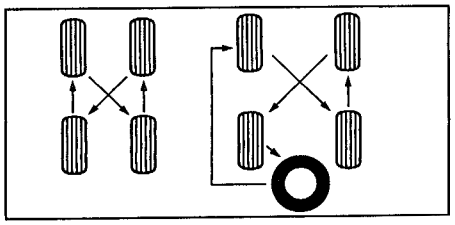

Operating Features

aluminum wheels Attention: to av oid damaging the protective lacquer la yer, do not allow tire service personnel to clean the outer surface of the wheel with a wire brush and to remove adhesi ve balancing weights with a screwdriver . 1. If wheels have been rotated, replace d, or repaired, check the tightness of t he lug nuts after the first 1,600 km.

2. Use the wheel mounting nuts and th e TOYOTA wrench specifically designed for aluminum wheels.

3. When balancing the wheels, use the specialized weigh ts for aluminum rims, as well as a plastic or rubber hammer; a nd use the neutralizer and exhaus t system.

4. Periodically inspect the aluminum whe els for any damage (cracks and chips). If any damage is found, replace them imme diately.

wheel.

Wheel Disc Replacement

1. When replacing wheel rims, ensure th at the selected rim matches the followin g parameters: the mounting diameter (D), rim width (H), offset (ET), bolt or stud hole pattern diameter (PCD), and center bore diameter (DIA).

2. Incorrect

selection of discs and the tire may adversely affect handling, wheel a nd bearing service li fe, cooling of the bra ke mechanism, accu racy of the speedom eter/odometer readi ngs, braking distanc e, headlight directi on, bumper height, ground clearance

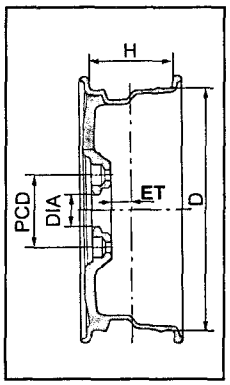

and the distance between the tire and the body. Depending on the type of tires, the fol lowing wheels listed in the table "Correspon dence of tire sizes with wheel parameters" a re installed. As an example, the possible ma rking is given:

5.5JJx14H4 ET45 PCD100 DIA54

In wheel markings, the first numbers "5. 5" indicate the rim width (H), expressed either in millimeters or in inches. The let ters "JJ" denote the rim profile. The follo wing number "14" indicates the wheel's rim seat diameter (D) in inches, which must correspond to the mounting diam eter of the tire to be fitted. The number "45" after the letters ET denotes the wh eel offset (ET) in millimeters. The followi ng designations also appear in marking s: "H" or "HH2"

indicates the presence of one or two circumf erential humps on the rim, the numbers after the designation "DIA" - diameter of the central hole, "PCD" - dia- meter of the circle on which the holes for fastening bolts or studs are located.

Brake pad wear indicator s

Disc brake pads are equipped with wear indicators. When The thickness of the pads becomes mini mal, and when braking the wear indicato r touches the brake disc and produces a n unpleasant squealing sound.

Catalytic

1. The catalytic converter is a device f or reducing the toxicity of exhaust ga ses. When operating a vehicle equipp ed with a converter, observe the follo wing precautions:

the following precautions:

a) During and after engine oper ation, the exhaust pipe is heated to a high temperature. To avoid fire, do not park the vehicle over easily flammable materials such as leav es, paper, dry grass, etc.

b) Use only unleaded gasoline.

c) Do not drive at very low speed- not fuel in the tank.

g) Do not allow the engine to idle f or more than 20 minutes. d) D o not start the vehicle's engine by towing.

2. Maintain the engine in good working c ondition. Do not allow it to be faulty- issues in the ignition and power supply system could lead to overheating of the catalytic converter.

3. When operating the vehicle, observe the following precautions:

a) Avoid inhaling engine exhaust gases; thi s can lead to loss of consciousness or even death, as the gases contain carbon monoxi de (a colorless, odorless gas).

6) Periodically inspect the exhaust syste m for holes or loose fastenings. Immedi ately check the system if there is any un usual noise in the exhaust sound

cotton or contact with used (exhausted) oil gas entering the passenger compartment.

c) Do not run the engine in a closed area (garage) longer than necessary to drive in or out.

d) Do not remain for a long time in a parked vehicle with the engine running.

Inspection and replacement of fuses and fusible links

If the headlights or other electrical components do not work, check the fuses and fusible links. If any of the components are blown, they must be replaced.

Fusible links and fuses are designed to melt before the vehicle's wiring is dam aged if an overload occurs in the electri cal circuits from the battery. Note: Befo re replacing fusible links, determine th e cause of the electrical overload and perform the necessary repairs.

Warning: it is prohibited to use wire in place of fusible links, even for temporary installati on, as this can cause damage in the electrical system and may lead to a fire.

1. For replacing the fuse or

Turn off the ignition when replacing the fuse insert.

2. Open the mounting blocks and determi- determine which component has burned o ut. Chapter "Body Electrical" also shows p ossible locations of the fuse/relay boxes i n the passenger compartment and in the engine bay. Note: the placement of fuses in different equipment variants may differ somewhat from that shown in the illustra tions.

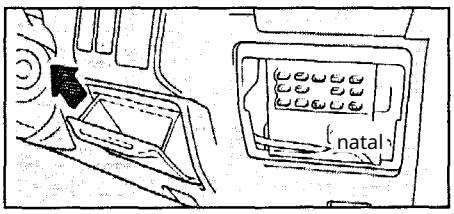

Location of the mounting block of the instrument panel.

Table. Correspondence of tire sizes to wheel rim parameters.

Recommended tires and rims.

Tire type	Disk	Offset, mm	PCD	DIA
185/60R14 82H5.5JJ45 (39)			100	54
175/65R14 82S5.5JJ45 (39)			100	54
185/65R14 86S5.5JJ45 (39)			100	54

Permitted tires and wheels for installation.

Wheel / Tire type	Offset, mm			PCD	DIA
	5.5JJ	6JJ	6.5JJ	100	54
175/65R14	45~32	40~35	38~35*	100	54
185/65R14	45~32	40~35	38~35*	100	54
185/55R15		40~35	38~35*	100	54
195/50R15		40~35	38~35*	100	54
195/45R16		40~35	38~35*	100	54

* - After installing the front wheels, be sure to check that in the extreme positio ns the wheels do not contact suspension or body components.

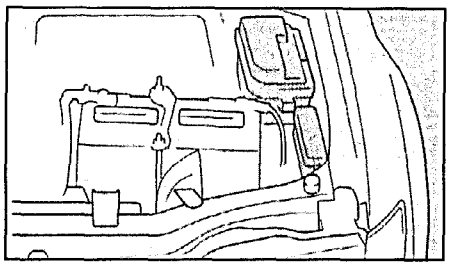

Location of mounting no. 2 and the f block use block.

3. If you are not sure whether the fuse in question has blown, replace the suspect f use with another fuse whose condition y ou are sure of to check. Note: To remove and install Type "A" fuses, use a special p uller such as tweezers.

Type	Good	Blown
A (small currents, 5 - 20 A)		
B (medium currents, 30 - 50 A)	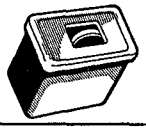	
C (high currents, 50 - 100 A)	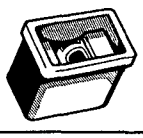	

4. Install only a fusible fuse with the rated current in amperes specified on the cover of the fuse block.

5. If there is no spare fuse, in critical situation s you may remove fuses from the "RADIO", "A /C" or "MIR- HTR" positions, which are not ess ential for normal vehicle operation, and use t hem if their rating matches the required valu e. 6. If you do not have a fuse with the rated v alue, you should use a fuse with a lower ratin g as close as possible to the rated value.

Note: it is recommended to keep a set of spa re fuses in the vehicle.

7. If the new fusible fuse blows immediately, t his indicates a fault in the electrical system.

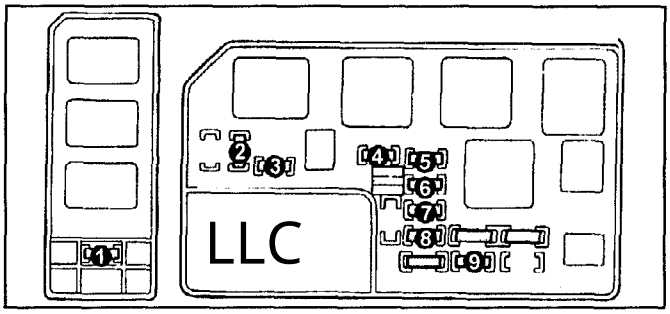

Possible option for fuse and relay box No.2 and fuse bl ock (left side of the engine compartment).

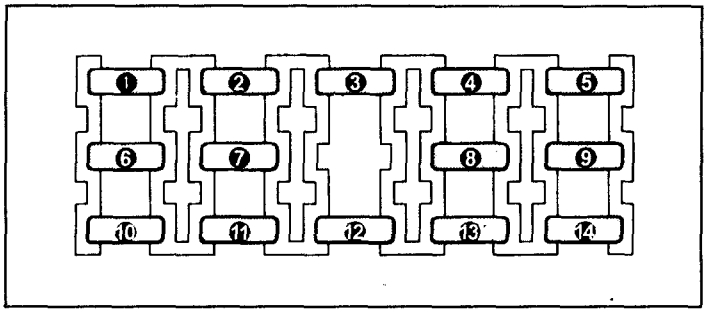

Possible option for the instrument panel r elay and fuse box.

Instrument panel relay and fuse box.

1	FOG (fog lights)	15A
2	STOP (stop lights, shift lock, ABS, engine management system and automatic transmission)	15A
3	ELECTRONIC IG (air conditioning system electric fan, shift lock, ABS, electronic automatic transmission cont rol system)	10A
4	STARTER (starter, ignition system, engine management system and automatic transmission)	5A
5	CIC (shift lock, airbags, power mirror drive, clock, audio system, warning system for lights left on and key lef t in ignition, cigarette lighter, additional indicator block)	15A
6	ELECTRONIC B (airbags, instrument cluster)	5A
7	GAUGE (engine and automatic transmission control system, charging system, ABS, 4WD control, power window drive, instrument cluster, seat belt reminder system, wiper de-icer, warning system for lights left on and key left in ignition, rear hatch window heater, air conditioning system, reverse lamp) TURN (turn signals and hazard wa rning lights)	10A
8		17.5A
9	IGNITION (engine and automatic transmission control system, airbags, instrument cluster)	17.5A
10	TAIL (engine control system, clock, fog lights, warning system for lights left on and key left in ignition, parkin g lights, illumination)	15A
11	WIPER (windshield wipers and washers)	20A
12	DEFOG (rear hatch window heater) (models produced until April 1997) DEICER (wiper de-icer) (models produced from April 1997)	30A
13	IDLE-UP (engine control system, instrument cluster, rear hatch glass heater)	10A
14	DOOR (door locks)	30A

Fuse and relay block No. 2 and fuse link block (left side of engine compartment).

1	COND FAN (air conditioner condenser electric fan)	30A
2	HEAD (LH) (left headlight)	10A
3	HEAD (RH) (right headlight)	10A
4	AM2 (starting and ignition system)	15A
5	HAZARD (turn signals and hazard warning lights)	10A
6	EFI (engine control system and automatic transmission)	15A
7	DOME (central locking, instrument cluster, clock, audio system, warning for lights left on and key left in i gnition, interior lighting, auxiliary indicator block)	15A
8	ALT-S (charging system)	5A
9	HORN (horn)	10A

Maintenance and general inspection and adjustment procedures

Service intervals

If you primarily operate the vehicle under one or more of the special conditions listed below, more frequent maintenance for certain items of the service schedule is required.

1. Road conditions.
   a) Operation on bumpy, muddy, or slushy roads.
   b) Operation on dusty roads.
   c) Operation on roads treated with salt for de-icing.
2. Driving conditions.
   a) Towing a trailer or using a roof rack. b) Repeated short trips of less than 10 km when the outside temperature is below freezing. c) Excessive idling and/or prolonged driving at low speed. d) Regular high-speed driving (80% or more of the vehicle's maximum speed for more than 2 hours).

Choosing engine oil

Engine oil and filter

Precautions when working with oils

1. Prolonged and frequently repeated contact with engine oil causes the removal of the skin's natural lipid layer and leads to dryness, irritation, and dermatitis. In addition, used engine oils contain potentially hazardous components that may cause skin cancer.

2. After working with oil, thoroughly wash your hands with soap or another cleaning agent. After cleaning the skin, apply a special cream to restore the skin's natural lipid layer.

3. Do not use gasoline, kerosene, diesel fuel, or solvent to clean the skin.

1. Use oil meeting API classifications SG, SH, SJ.
2. Select viscosity (SAE) according to the temperature-range chart that corresponds to the vehicle operating conditions until the next oil change.

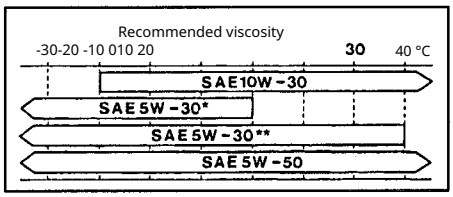

* - 4A-FE, 4A-GE, ** - 7A-FE.

Check the level

Engine oil

1. Park the vehicle on a level horizontal surface. After switching off the engine, wait a few minutes to allow the oil to drain into the sump.

Maintenance service interval chart.

Service items	Interval (mileage or time in months, whichever comes first) ×1000 km 10 20 30 40 50 60 70 80 months	Recommendations
Timing belt	30 40 50 60 70 80 replace every 100,000 km	-
Valve clearances	- P - P - P - P 24	-
Accessory drive belts	- P - P - 3 - P 24	-
Motor oil	3 3 3 3 3 3 3 3 12	Note 2
Oil filter	3 3 3 3 3 3 3 3 12	Note 2
Hoses and connections of the cooling and heating systems	- - - P - - - P 24	Note 1
Coolant	- - - 3 - - - 3 24	-
Exhaust system front pipe and mounting	- P - P - P - P 12	-
Spark plugs (standard type spark plugs)	P 3 P 3 P 3 P 3 12 / 24	-
Spark plugs (platinum spark plugs)	- - - - - - - 3 72	-
Battery	P P P P П P П P 12	-
Fuel filter	- - - 3 - - - 3 48	-
Air filter	- П - 3 - P - 3 24/48	Note 2,3
Fuel filler cap, fuel lines.	- - - P - - - P 24	Note 1
Oxygen sensor	replace every 100,000 km	
Engine crankcase ventilation system	P P - P - P - P 12	-
Clutch pedal	P - - - - - - - -	-
Clutch hydraulic fluid	P P P P P P P П 6	-
Brake pedal and parking brake	P P — P P P P P P 6	-
Brake shoes and drums	- P - P - P - P 12	Note 2
Brake pads and discs	P P P P P П P P P 6	Note 2
Brake fluid	P P P 3 P P 3 6 / 24	-
Brake system pipes and hoses	- P - P - P - P 12	Note 2
Power steering fluid	P P P P Ko П P P 6	-
Steering	- P - P - П - P 12	Note 2
Ball joints and drive shaft boots	- P - P - П - P 12	Note 2
Manual transmission and transfer case oil	- - - P - - - 324/48	Note 2
Automatic transmission fluid	- Ko - P - 3 - P12/36	Note 2
Automatic transmission working fluid filter	- - - - - 3 - - 36	Note 2
Rear axle differential oil (4WD)	- P - 3 - P - 3 12 / 48	-
Front and rear suspension	- P - P - P - P 12	Note 2
Chassis and body bolts and nuts	- M3 - MZ - M3 - M3 12	Note 2
Tire condition and tire pressure	P P — P P P P P 6	-
All lighting devices and signals	P P P P P P П 6	-
Windshield wipers and washers	P P P P P P P 6	-
Air conditioning system refrigerant	- P - P - P - P 12	-

Note: P - inspection and/or adjustment (repair or replacement if necessary); 3 - replacement; C - lubrication; MZ - tighten to the specified torque.

1. After 80,000 km (or 48 months) inspect every 20,000 km (or 12 months).
2. When operating under severe conditions, perform maintenance twice as often.
3. When operating on dusty roads, check every 2,500 km (or 3 months).

2. Remove the oil dipstick and wipe it with a cloth.
3. Reinsert the dipstick all the way in. 4. Remove the dipstick and assess the oil level in the engine oil pan. If the oil level is at or slightly above the low mark on the dipstick, add the same type of engine oil that was originally used in the engine.

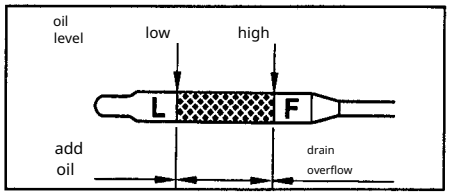

5. Add oil if necessary. a) Remove the oil filler cap.

b) Add the required amount of engine oil. The approximate amount of oil needed to raise the level between the low and high marks on the dipstick is 1.0 L.

Note:
- Avoid overfilling the oil, otherwise the engine may be damaged.
- After adding oil, always check the oil level on the dipstick. b) Install the oil filler cap.

of the filler neck.

Engine oil and filter replacement

Warning: when operating under severe conditions, replace every 5,000 km (or 6 months).
1. Park the vehicle on a level, horizontal surface.
2. Warm up the engine for a few minutes until it reaches normal operating temperature, then turn off the engine.

3. Drain the old engine oil. a) Remove the oil filler cap.

b) Unscrew the drain plug and drain the oil into a container.
4. Replace the oil filter.
a) Using a special tool, remove the oil filter.

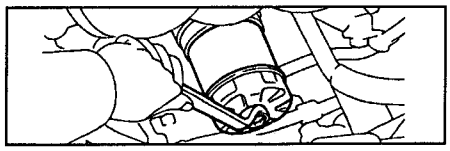

6) Check and clean the mounting surface for the oil filter on the engine block. b) Apply a small amount of new engine oil to the gasket surface of the new oil filter.

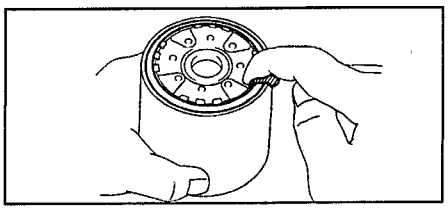

g) Screw the new filter in by hand until the gasket fits snugly against the mating surface.

d) Using a special tool, turn the filter an additional 3/4 turn.

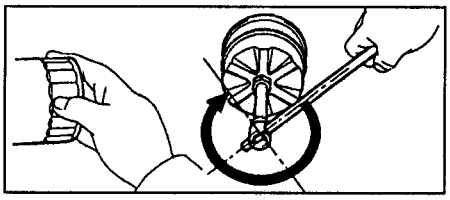

3. Pour in new engine oil. a) Clean the drain plug, install a new gasket if necessary, and tighten the drain plug. Tightening torque

..... 25 N·m

b) Pour in new engine oil.

Oil capacity:
4A-FE, 4A-GE:
without replacing the filter.. ..... 2.8 L
with filter replacement ... . 3.0 L
7A-FE:
without replacing the filter. ..... 3.5 L
with filter replacement ... . 3.7 L
c) Install the oil filler neck cap.

4. Start the engine and check

for leaks.
5. Check the engine oil level.

Coolant inspection and replacement

1. Check the coolant level in the expansion tank. The coolant level on a cold engine should be between the "LOW" and "FULL" marks on the side of the expansion tank. If the level is low, check for leaks and add coolant up to the "FULL" mark (with a warm engine) and the "LOW" mark (with a cold engine).

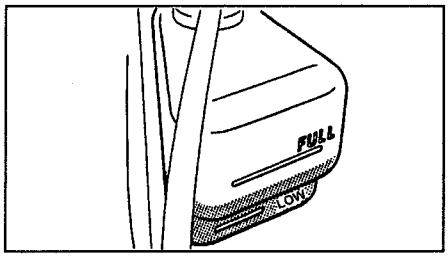

2. Check the condition of the coolant.

a) Remove the radiator cap. Caution: To avoid burns, do not remove the radiator cap on a hot engine, as the fluid and steam are under pressure.

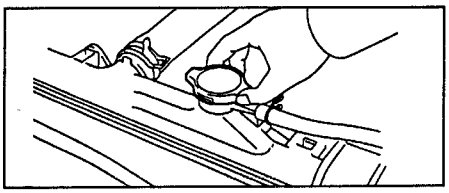

b) There should not be excessive rust deposits around the valves radiator caps or the seating areas of the radiator filler neck.
The coolant must not contain oil and should be clear.
If the coolant is dirty, clean the cooling system passages and replace the fluid.

c) Install the radiator cap.
3. Replace the coolant.
a) Remove the radiator cap.
Note: be careful when removing the cap from a hot engine.
b) Drain the coolant by unscrewing the drain plugs of the radiator and engine.
c) Apply sealant to two or three threads of the drain plugs and screw them in.

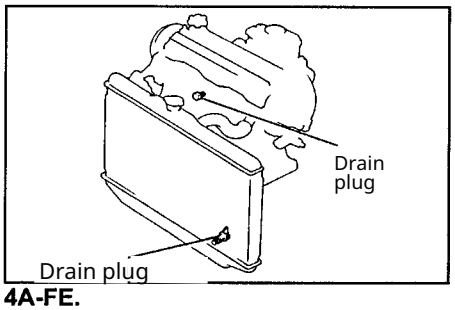

4A-FE.

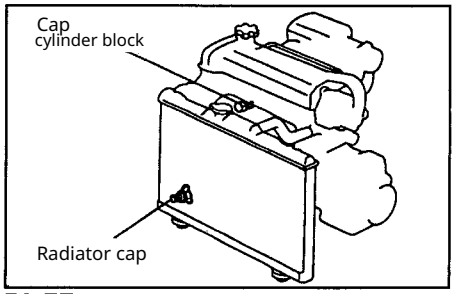

7A-FE.

g) Slowly pour the coolant into the cooling system in an amount corresponding to the filling capacities. Note:

- Use a good brand of coolant based on ethylene glycol and mix it according to the manufacturer's instructions.

- It is recommended to use a coolant that contains more than 50% ethylene glycol but no more than 70%. Do not use alcohol-based antifreeze.
-

- Coolant must be mixed with demineralized water or distilled water.

Filling capacities:
4A-FE:
2WD ..... 5.4 L
4WD ..... 6.1 L
4A-GE ..... 6.0 L
7A-FE:
models with manual transmission ..... 5.6 L
models with automatic transmission ..... 6.3 L

h) Install the radiator cap. e) Warm up the engine and check it for leaks.

g) Check the coolant level and top up if necessary
bridges.

Inspection and Cleaning of the Air Filter

1. Remove the air filter.
2. Inspect the air filter and ensure that it is not damaged and does not have oil stains. If necessary, replace the air filter.

3. Blow out completely with compressed air - Belt inspection
Blow the upper part of the filter element, the
n the lower part.

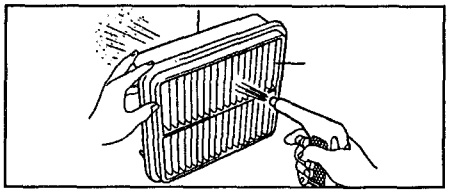

4. Install the air filter in
place.

Checking the condition of the battery

1. When inspecting the battery, check for: the absence of rust on the battery bracket, the - security of the battery terminal connections, absence of corrosion and damage to the terminals, and absence of damage or leakage of the battery case.
2. Check the battery.
a) Using a hydrometer, check the electrolyte specific gravity in each cell of the battery.
Normal specific gravity
electrolyte .....1.25 - 1.29 at 20°C of operating.

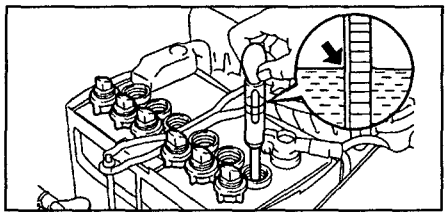

If necessary, add distilled water. If after ch arging the battery the electrolyte specific g ravity does not meet the technical

If it does not meet the technical conditions, replace the battery.

6) Inspection is carried out after the veh icle has finished moving and no later th an 20 minutes after the engine is stopp ed.
Turn the ignition to "ON" and switch the electrical consumers (headlight s, fan, rear fog lamps) on for 60 seco nds to remove the surface charge.

Turn the ignition to "OFF" and the el - ectrical consumers off, measure the v oltage between the negative (−) and positive (+) terminals of the battery. R ated voltage (at 2
0°C)..
..... 12.5 - 12.9 V If the voltage is below the nominal value, ch arge the battery.

3. Using a tester, check the condition of the f uses by verifying that there is continuity (a s hort circuit) across their terminals.

a) Check the fastening strength
terminals, absence of corrosion.
b) Ensure the integrity of the fuse link a nd fuses.

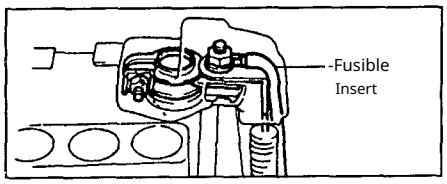

drive of auxiliary units

1. Inspect the drive belts for wear and damage. If a defect is found, replace the belt.

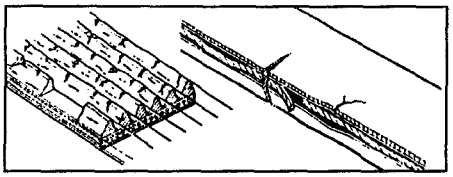

Note: Do not allow the rubber to d - elaminate from the cord on the inne r (rib) or outer surfaces of the belt, e xposure or damage to the cord, sep aration of the rib from the rubber b ase, presence of cracks, delaminatio n or wear on the belt sidewalls and on the side surfaces of the belt ribs. Replace the belt if necessary.

2. Check and adjust the tension of the drive belts for auxiliary ag-
a) Apply a force of 98 N (10 kg) at the specified points and measure
the belt deflection.

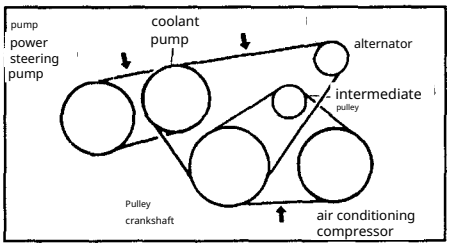

4A-FE, 7A-FE.

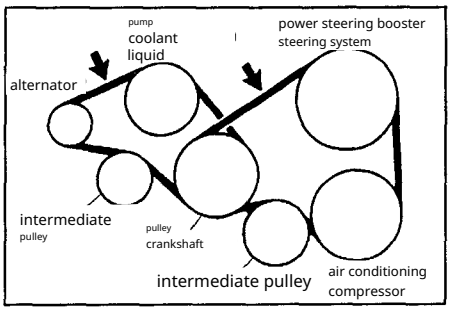

4A-GE.

Check that the belt does not slip off—
contacts the tensioner pulley.
If necessary, replace the
tensioner.
Note:
- The term "used in service" refers to a belt that has been in operation for more than 5 minutes.

- After installing the belt, check that it is seated correctly on the pulleys. Check by hand at the lower pulleys for any loose grooves on the pulley.

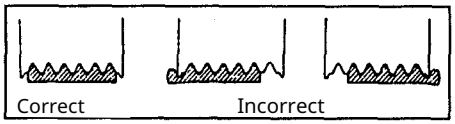

- After installing the belt, start the engi ne and let it run for 5 minutes, then che ck the belt tension again. 2. (4A-FE, 7A-F E) Adjust the alternator belt tension (if n ecessary).

if necessary.
a) Loosen the mounting bolts "A" and "B" shown in the illustration.
6) Using the adjustment bolt "C", adju st the belt tension.
b) After completing the adjustment, tighte n the mounting bolts "A" and "B". Ti ghtening torque:
bolt "A". ..... 60 N·m
bolt "B" ..... 19 N·m

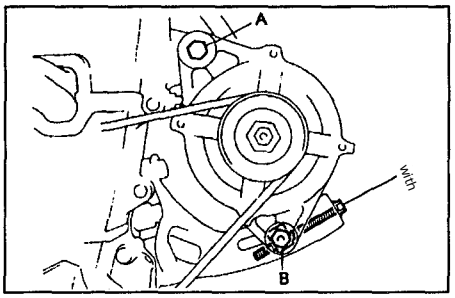

3. (4A-FE, 7A-FE) Adjust the drive-belt tensi on of the power-steering pump if necessa ry.
a) Loosen the mounting bolts "A" and "B" shown in the illustration.
6) Adjust the drive-belt tension and tigh ten mounting bolts "B" and "A".

Tightening torque:
bolt "A". ..... 40 Н·м
bolt "B". ..... 40 Н·м

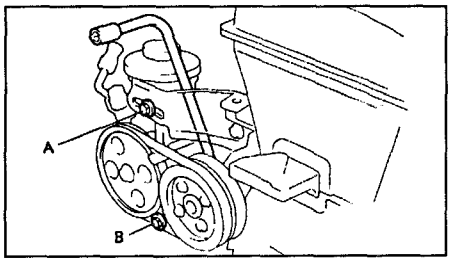

4. (4A-FE, 7A-FE) Adjusting the tension of the air conditioning compressor drive belt (if necessary).
a) Loosen the nut on the air
conditioning compressor pulley "A".

Table. Checking the tension of accessory drive belts.

Engine and driven accessory	Belt deflection, mm	
	NEW	previously in operation
4A-FE, 7A-FE (alternator)	7 - 9	11,5 - 13,5
4A-FE, 7A-FE (power steering pump) control)	5 - 6	6 - 8
4A-FE, 7A-FE (air conditioning compressor)	6 - 7	8.5-9.5
4A-CE (alternator)	3,5 - 4,5	6-7
4A-CE (power steering pump)	6,5 - 7,5	9,5 - 11,0

b) Adjust the drive belt tension with bo lt "B".
Tightening torque. .....40 Н·м

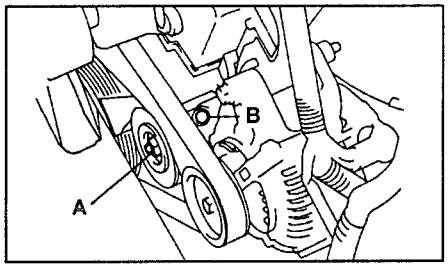

5. (4A-GE) Alternator drive belt tension adjustment (if necessary).

a) Remove the right-hand engine splash s hield.
6) Loosen locknut "A". b) Adjust t he drive belt tension with bolt "B" an d tighten the locknut.

Tightening torque. .....48 Н·м

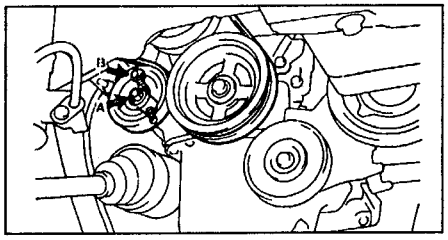

6. (4A-GE) Adjustment tension power steering pump drive belt and air conditioner compressor (where applicable).
a) Remove the right-hand engine splash shi eld.
b) Loosen the lock nut "A".
c) Adjust the belt tension using bolt "B" ahd tighten the lock nut.
Tightening torque... .....40 Н·м

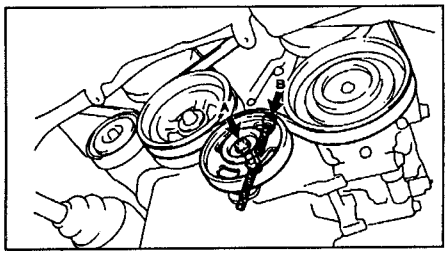

Timing belt drive component inspection

1. Inspect the timing drive belt:
- Do not bend or twist the timing drive belt.
- Do not allow the toothed belt to come into contact with oil or water.
- Do not stretch the timing drive belt when installing or removing the fastening bolt of the camshaft timing pulley.

2. Check the timing drive belt for the following defects:
a) Check the correct installa- tion of the timing drive belt.
- Check the timing belt cover gaskets fo r damage and correct installation.

b) If the belt teeth are damaged or cra cked, check that the camshaft and the coolant pump do not seize.

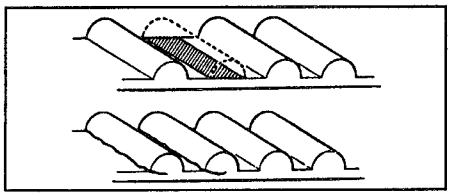

c) If significant wear is observed on th e non-working side of the belt, check for nicks on the tensioner pulley side.

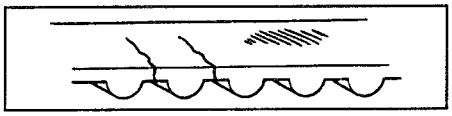

d) If wear or damage is found only on one side of the belt, inspect the belt guide and the correct alignment of the pulleys.

e) If there is significant wear on the bel t teeth, inspect the timing belt cover fo r damage. If necessary, replace the tim ing belt.

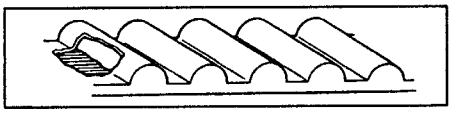

3. Check the tensioner pulley sur face and that it rotates smoothly . Replace it if necessary.

Inspection of high-voltage le ads Note: if removal of the high -voltage leads is necessary, refer to the “Ignition System” chapter. 1. Disconnec t the high-voltage leads from the spark plugs, handling them only by the rubb er boots. Mishandling the leads can ca use internal wire breakage.

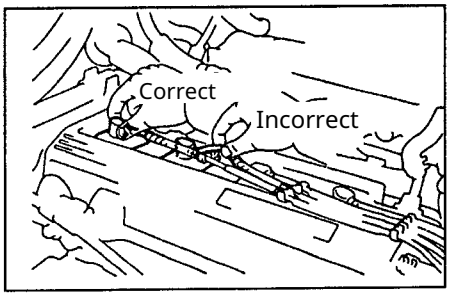

2. Inspect the boots for signs of electrica l arcing, cracks, or conductive tracks. Re place the high-voltage leads if necessary .

3. Using an ohmmeter, check the resistance of each high-voltage lead.

Maximum resistance
.....25 kΩ per lead

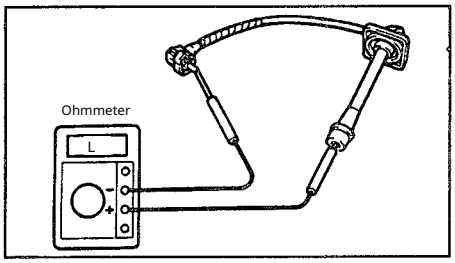

If the resistance exceeds the specified value, check the wire terminals or repla ce the wires (or) the distributor cap (un ified ignition assembly).

And

Inspection of spark plugs ignition

Attention: Engines 4A-FE and 7A-FE use s tandard-type spark plugs, while the 4A-G E engine uses spark plugs with a platinu m electrode coating. Standard type spar k plugs • If necessary, the gap can be adjusted by bending the side electrode.

- Spark plugs can be cleaned with a wire brush or in a sandblasting machi ne.

Spark plugs with a platinum electrode coa ting
- Never use a wire brush to clean spark plugs of this type.
- Never attempt to adjust the gap on a used spark plug. Editor’s note: Toyota r ecommends replacing

spark plugs with a platinum electrode coa ting every 100,000 km of vehicle mileage. However, considering vehicle usage and f uel quality in Russia, we recommend repl acing them more frequently.

ignition (4A-FE, 7A-FE) Insp ection of standard spark plugs 1. Di sconnect the high-voltage leads from t he spark plugs. 2. Using a 16 mm spark plug wrench, unscrew remove the spark plugs.

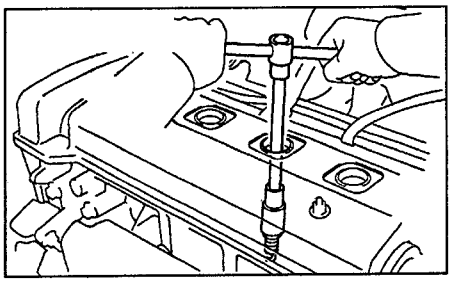

3. Clean the spark plugs using a sandblast er or a wire brush. Visually inspect the con dition 4. Chec k the spark plugs for elec trode wear, th read or/and insulator damage. Replace if necessary

the spark plugs.
Recommended spark plugs:
ND. K16R-U11
NGK BKR5EYA11

5. Check the gap between the electrodes.
Standard gap
Maximum gap ..... 1.1 mm
..... 1.3 mm

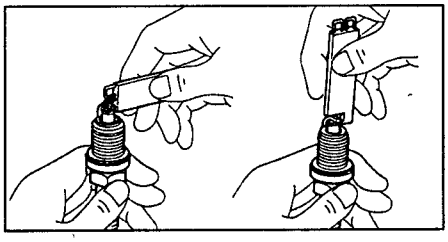

If necessary, the gap can be adjusted by bending the side electrode.

6. Screw in the spark plugs.
Tightening torque.. ..... 18 N·m
7. Connect high-voltage
wires to the spark plugs.

Checking spark plugs with platinum-coated electrodes (4A-GE)

1. Disconnect the high-voltage wires from the spark plugs.
2. Check the spark plug electrodes for ignition-gania.

If a megohmmeter is available
If a megohmmeter is available, measure the insulation resistance as shown in the illustration.
Rated
resistance ..... not less than 10 MΩ

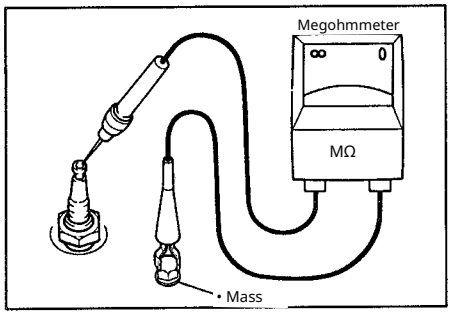

If the resistance is lower than the allowable value, clean the spark plug.

If a megohmmeter is not available a) Quickly increase the engine speed five times to 4000 rpm.

b) Unscrew the spark plugs.
Visually inspect the condition of the spark plug.
If the electrodes are dry, the inspection can be concluded.
If the electrodes are wet, it is necessary to proceed to the next step.
3. Remove the spark plugs. 4. Visually check the condition of the spark plugs for electrode wear, thread or/and insulator damage. If necessary,

replace the spark plugs.

Recommended spark plugs:
ND PK20R11
NGK..... BKR6EP11

5. Check the gap between the electrodes.
Nominal clearance ..... 1.0 - 1.1 mm
Maximum clearance ..... 1.3 mm
6. Clean the spark plugs. If the electrodes show traces of deposits of moist carbon residue, dry them and then remove the deposits with an appropriate solvent. If the electrodes

If they have traces of oil, first remove it with gasoline. Then clean the plugs using a spark plug cleaner by supplying air at a pressure not exceeding 588 kPa (6 bar) for no more than 20 seconds. 7. Screw in the spark plugs. Tightening torque
..... 18 N·m
8. Connect high-voltage leads
wires to the spark plugs.

Inspection and adjustment of the ignition timing advance angle

1. Warm up the engine to normal operating temperature.
2. Connect the tachometer. Connect the tachometer tester probe to the wiring "IG" (-) of the diagnostic connector.

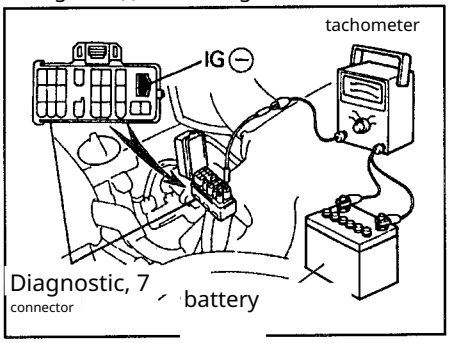

Note:
- Never allow contact with the tachometer "ground" terminal, because this can cause damage to the ignition module and/or the ignition coil.
- Some tachometers are incompatible with this ignition system, so check the compatibility of your instrument before

use.

3. Check and adjust the ignition timing angle.
a) Use a jumper to connect the "TE1" and "E1" terminals of the diagnostic connector.
Diagnostic conne

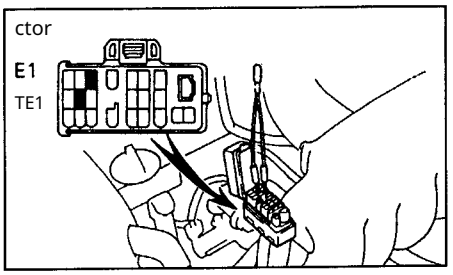

b) Check the engine operation at idle.

c) Connect the stroboscope and check the ignition timing.

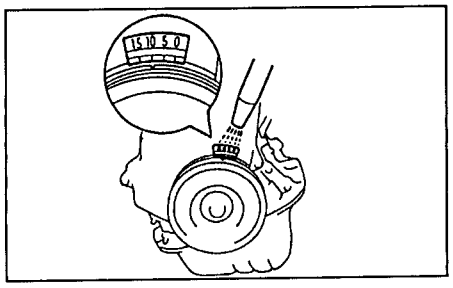

Ignition timing advance at idle (with terminals "TE1" and "E1" shorted). 8–12° before TDC
.....
g) If necessary, adjust the ignition timing by rotating the distributor housing, loosening its mounting bolts.

h) Tighten the bolts and recheck the ignition timing. i) Remove the jumper from the diagnostic connector.

4. Recheck the ignition timing.

Ignition timing at idle:

4A-FE, 7A-FE.. ..... 5–15° BTDC
4A-FE (from 1997 2.) ..... 10–20° BTDC
4A-GE ..... more than 15° BTDC

5. Remove the tachometer and stroboscope.

Checking idle speed Check the idle speed under standard conditions:

a) Engine warmed up to normal operating temperature.
b) Air cleaner installed. c) All intake system tubes and hoses connected.

r) All optional equipment—
ignition is off.
d) All vacuum lines are connected.

e) The wiring connectors of the injection system are connected.
f) The ignition timing is set correctly.

3) The transmission gear lever is in the neutral position or the automatic transmission selector is in the "N" position.

Idle speed:
4A-FE (manual transmission):
until 1997 ..... 650 ± 50 rpm
after 1997 ..... 580 ± 50 rpm
4A-FE (automatic transmission) ..... 700 ± 50 rpm
4A-GE (automatic transmission) ..... 850 ± 50 rpm
7A-FE (manual transmission) ..... 520 ± 50 rpm
7A-FE (automatic transmission) ..... 700 ± 50 rpm

Checking the end-of-compression pressure

Note: If there is insufficient power, increased oil and/or fuel consumption, measure the end-of-compression pressure. 1. Check the end-of-compression pressure in the cylinders.

a) Insert the compression gauge into the open-spark plug thread.
b) Fully open the throttle valve.
c) While cranking the engine with the starter, measure the compression pressure. Note: Always use a fully charged battery to obtain an engine speed of 250 rpm or higher.

g) Repeat steps (a) through (c) for each cylinder.
Note: measurements should be taken in as short a time as possible.

Compression end pressure:
nominal.. ..... 13.5 kg/cm²
minimum ..... 10.0 kg/cm²
Differences in pressure between cylinders ..... not more than 1.0 kg/cm²

d) If the compression pressure is low, po ur a small amount of engine oil into the c ylinder through the spark plug hole and r epeat steps (a) through (c) for the cylinde rs with low compression pressure.

- If adding oil increases the compression pressure, it is possible that the piston rings and/or the cylinder wall are worn or damaged.
- If the pressure remains low, then may cause the valve to stick, or has a me- one hundred its loose seating in the saddle, or there is a leak through the cylinder head gasket.

Checking the level of working fluid

of the hydraulic drive for the clutch and brake system

1. The working fluid level should be between the "MAX" and "MIN" marks, approximately 10 mm (brake system) or 5 mm (clutch) below the maximum level.

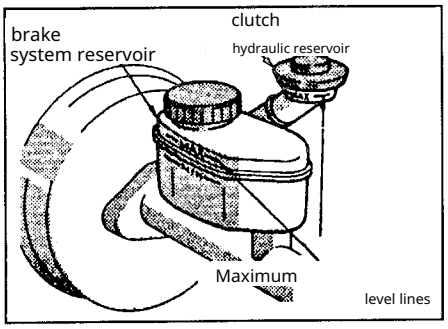

2. If the level is below the "MIN" mar k, add the working fluid of the same type that was previously filled. T ype of working fluid: ..... SAE J1703 or FMVSS 116 DOT3 or DOT4

Checking and replacing the oil in the manua l transmission and transfer case

1. Park the vehicle on a lev el, horizontal surface.

2. Unscrew the fill plug. Make sure th at the oil level in the transmission ho using is below the cut edge of the fill plug opening. If necessary, add oil to the housing. 3. To drain the oil, u nscrew both the fill and drain plugs. The transmission should be warmed up. (Be careful not to burn yourself w ith hot oil). After draining the oil, scre w in and tighten the drain plug. Note : the transmission type is sta mped on the aluminum plate attache d to the firewall in the "TRANS/AXLE" line.

Oil grade according to API:

C50, C56, C160. ..... GL-3
E55F, E59F GL-5

Recommended viscosity ..... *SAE 75W-90*

Filling volume (transmission + transfer case):

E55F+E2AV, E59F+EF2AV..... 4.5 L
C50, C56
C160..... ..... 1.9 L
..... 2.1 L

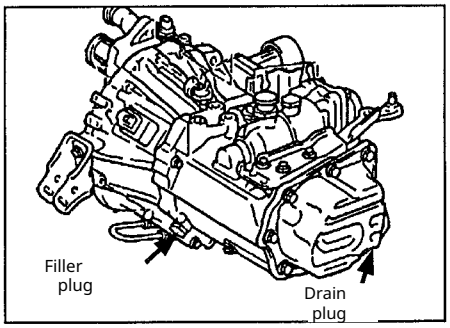

C50, C56.

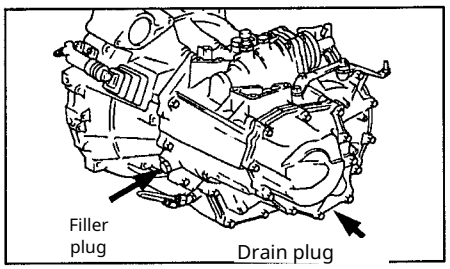

E57F, E59F.

4. After installing the filler plug, check t he transmission for absence of oil leaks or damage.

Checking the transmission working fluid

Note: the vehicle must be driven to reac h the normal operating temperature of 70–80°C for the working fluid. 1. Park th e vehicle on a level, horizonta l surface and engage the parking brake.

2. With the engine idling, move the selector through each range from " P" to "L", holding for 2–3 seconds, t hen return it to the "P" position.

3. Check the fluid level with the engine idli ng. Remove the dipstick and wipe it dry.

4. Fully insert the dipstick into the t ube. 5. Remove the dipstick. The w orking fluid level should be betwee n the "HOT" marks (warmed). If the level is below this range, add worki ng fluid. Working fl uid: Except A241 H. ..... DEXRON III or equivalent Tun T

A241H.....

Note: for more detailed information about Type T working fluid, see the " Automatic Transmission Fluid Replac ement" section. Note: do not overfill above the specified level.

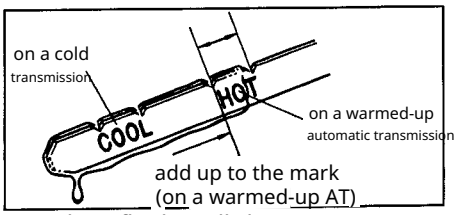

6. If the working fluid smells bur- nally or is black in color, re- place it.

Transmission filter replacement Wa rning: the filter must be replaced (or cleaned, if possible) whenever the hy draulic fluid is changed.

Note: after replacing the filter, add trans mission fluid to the AT. Then start the en gine, warm it up to operating temperatu re, move the selector through each rang e, pausing 2–3 seconds in each, then set the selector to "P" and check the fluid lev el.

1. Clean the external surfaces of the transmission housing.

2. Unscrew the drain plug and drain the flu id into a suitable container. Torque for plu g on installation: 17 N·m .....

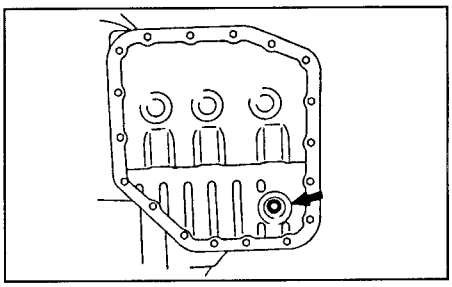

3. Unscrew the oil pan mounting bolts. Rem ove the oil pan and the fill tube, and clean t he mating surfaces of the oil pan and the tr ansmission housing. Tightening tor que during installa tion. Caution: ..... 5 N·m

- Some amount of fluid always remains in the pan.
- Do not damage the filler tube and the sealing ring.
- Clean the magnets installed in the pan.
- When installing, make sure that the magnets do not contact the tubes.

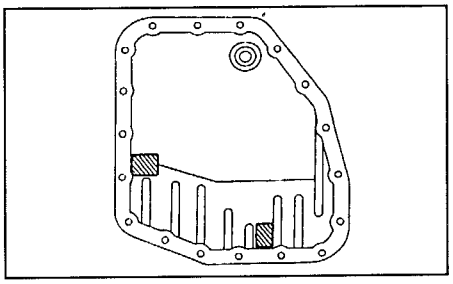

A245E.

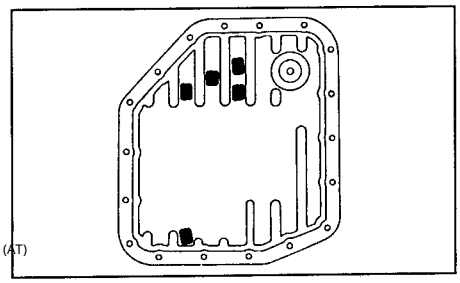

A241H.

5. Remove the oil tube bracket and the filter.

Bolt tightening torque..... 10 N·m

Note: Numbers on the illustrations indicate bolt lengths (in mm).

2. Pull out the dipstick and wipe it clean.

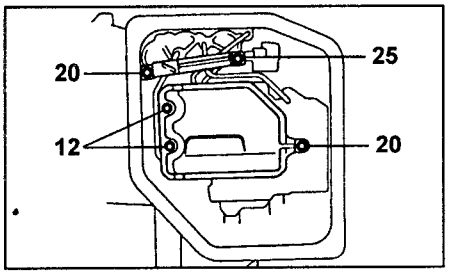

Replacement of working

fluid in the automatic transmission

1. Unscrew the drain plug and drain th e working fluid. 2. Install a new g asket and screw in the drain plug. 3. Fil l fresh working fluid through the fill er neck up to the lower mark of the "C OOL" range. Working fluid: Except A24 1H.

..... DEXRON III or equivalent Tun T

A241H.....

Note: Toyota automatic transmission workin g fluid "Type T" is designed to provide partial lockup of the torque converter:

The system that provides partial lockup of the t orque converter precisely determines the timin gs of engagement—

Rotate the transformer of all three modes in accordance with the hydraulic op eration. 2. Install the drain plug of the opening. With the vehicle driving para

meters, this provides more economic al fuel consumption. 3. Pour fresh oil throug h the dipstick tube. Editorial note: the only working fluid that is analogous to T oyota "Type T" and available on our market is Castrol GL-5 SAE 75W-90.

TRANSMAX Z. This is a synthetic oil and its pric e is relatively high.

Only in extreme necessity (at your discretion), you may use DEXRON II I or an equivalent

valent. Any serious cau-

no obstacles preventing this, we do not known.

Volume of filling fluid (v for a "dry" gearbox:

A241H.. .....8.2 L

hat the oil level in the crankcase is below the edge of the filler opening. If

4. Start the engine and let it idle

move the selector through all positions

positions from "P" to "L" and back to the "P " position.

5. While the engine is idling, check the flui d level. If necessary, add fluid to the "COO L" mark on the dipstick.

6. Check the fluid level at a normal opera ting temperature of 70–80°C and top up if necessary. Note: Do not overfill ab ove the specified level.

Checking the oil level in the transfer case

(Automatic Transmission)

1. Park the vehicle on a level horizontal surface and engage the parking brake .

3. Fully insert the dipstick into the tu be. 4. Remove the dipstick: the oil level s hould be between the "LOW" and "HIGH " marks. If the level is below this range, add oil. Note: Do not overfill above the specified level.

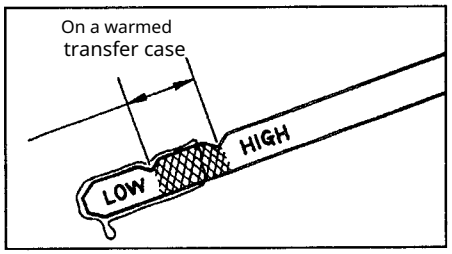

Replacing the oil in the transfer case (automatic transmission)

1. Unscrew the drain plug and drain th e oil.

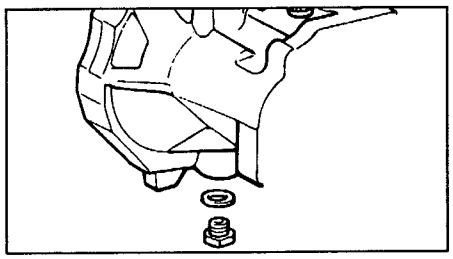

Recommended oil:

API oil classification.....

recommended oil ....

Oil fill volume: 0.8 L .....

6. Check the oil level and top up if necessary.

Note: do not overfill above the specified level.

Checking the oil level in the rear axle gear

1. Park the vehicle on a level horizontal surface.

2. Unscrew the filler plug. Make sure t

necessary, add oil while rotating and

oil in the crankcase.

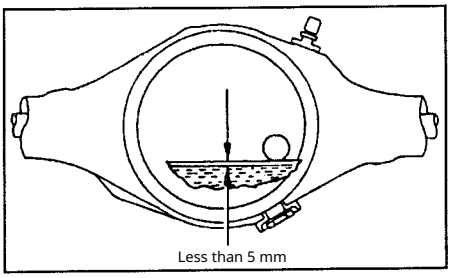

Warning: be careful, immediately after driv ing the oil in the crankcase may be hot. Oil quality according to

API..... GL-5 Recommended oil viscosity a ccording to SAE..SAE 85W-9

0 .SAE 85W-90 Filling volume..... 0.9 L .....

Checking the power steering flu id level 1. Park the vehicle on a le vel surface.

2. With the engine OFF check the fluid level and add if necessary.

Working

fluid..... ATF DEXRON® II or III

Note: the fluid level must be between "MAX" and "MIN" on the reservoir or dipstick.

3. Warm up the working fluid.

a) Start the engine and set the engine s peed to 1000 rpm. b) Turn the ste ering wheel several times from lock to l ock to raise the fluid temperature to 40 - 80°C.

4. Check for absence of foaming or emulsi fication of the fluid. If foaming or emulsifi cation is present, purge the power steerin g system. If purging does not solve the pr oblem, check the system for leaks. 5. Chec k for increase

level

fluids.

a) Measure the fluid level with the engi ne running.

b) Turn off the engine, wait a few minutes, an d measure the fluid level.

Maximum rise in fluid level.

..... *5 мм*

If the fluid level rise is more than 5 mm, bleed the system.

6. Check the power steering fluid l evel.

Power steering flui d replacement

1. Raise the front of the vehicle with a jack and support the vehicle on stands.

2. Disconnect the return hose of the working fluid from the expansion tan k and drain the fluid into a contain er. 3. With the engine idling, turn the steering wheel from lock to lock while draining the working fluid. 4. Turn of f the engine.

5. Install the plug on the return hose fitting.

6. Fill the expansion tank with fresh fluid.

7. Start the engine and set the engine spe ed to 1000 rpm.

After 1 or 2 seconds the working fluid will be gin to flow out of the return hose. At that mo ment, turn off the engine.

Note: make sure a small amount of fluid re mains in the expansion tank. 8. Repeat ste ps “6” and “7” four t o five times to remove all the air from the working fluid.

9. Reconnect the return hose to the expa nsion tank.

10. Bleed the power steering system.

Engines 4A-FE and 7A-FE

Inspection and adjustment

thermal clearances in

valves

Note: Inspection and adjustment of valv e clearances must be carried out on a col d engine. 1. Disconnect the nega tive terminal from the battery. 2. Discon nect the wiring harness.

3. Disconnect the crankcase ventilation system hoses.
4. Disconnect the high-tension

leads.
5. Remove the cylinder head cover.

6. Set the piston of the 1st cylinder to TDC on the compression stroke.

a) Turn the crankshaft pulley clockwise an d align the groove on the pulley with the " O" mark on cover No.1 of the camshaft dr ive belt.

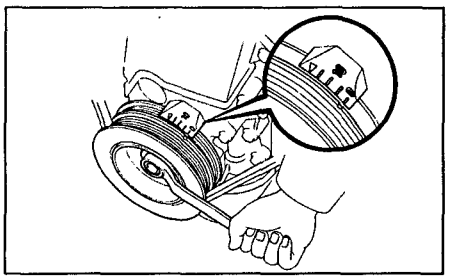

b) make sure that the hole on the camshaft drive pulley aligns with the mark on the bearing cover

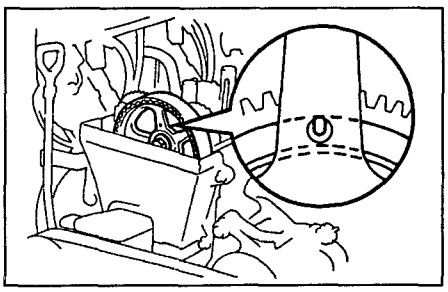

If this condition is not met, turn the crank shaft clockwise by one revolution (360°) a nd align the groove on the pulley with the corresponding mark again.

7. Check the valve clearance in the valves m arked in the figure:

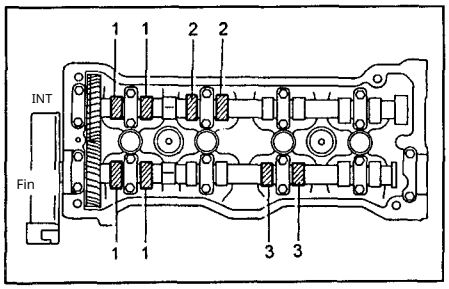

a) Using a feeler gauge, measure the clearance between the valve lifter and the heel of the cam shaft lobe.

shaft.

b) Record the values of any clearances t hat fall outside the specified limits. The se values will be used to select the requ ired size of the adjustment shim. Nomi nal valve clearance (on a cold en gine): intake 0.15–0.25 mm exhaust 0.25–0.35 mm

.....

.....

8. Rotate the crankshaft one full revolution (360°) and again align the

groove on the pulley with the corresponding mark as described in item 6,

and check the clearances of the valves indicated in the illustration by repeating

procedure 7.

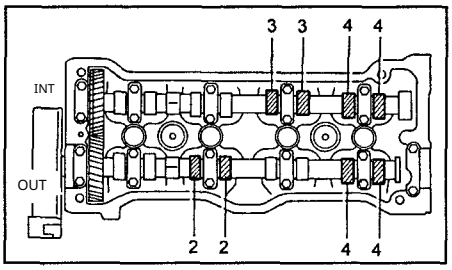

9. Adjust the thermal clearance in valves:

Notes:

- In these engines, to adjust the valve lash it is necessary to remove the camshaft-

of the drive shafts.

- Because the axial clearance of the cam shaft is very small, when removing the s haft it should be held in a horizontal pos ition. Otherwise, damage to the seating of the camshaft thrust washer in the cyli nder head may occur, which can cause t he camshaft to seize or break. The same requirements must be observed when i nstalling camshafts.

- The methods for adjusting the clearan ce of the intake and exhaust valves diffe r somewhat from each other.

9.1. Adjust the valve clearances

in the intake valves.

9.1.1. Remove the intake valve camshaft.

a) Turn the crankshaft pulley so that the hole in the auxiliary gear (by which the a uxiliary gear is mounted on the drive gea r of the camshaft) is positioned at the to p. This allows the cams of the 1st and 3r d cylinders to press equally on the lifters of the respective valves.

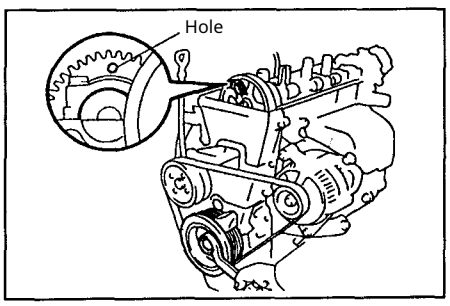

b) Unscrew the two bolts and remove the

cover of the 1st auxiliary camshaft beari auxiliary camshaft.

c) Attach ng.

the camshaft gear to the drive gear using the locating bolt.

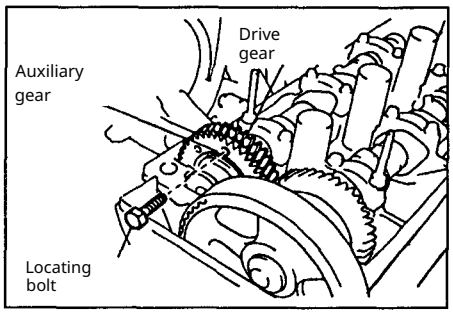

Recommended mounting bolt dimensions: diameter 6 mm, thread pitch 1.0 mm, lengt h 16–20 mm. Note: when removing the camshaft, ensure that the torsional load tra nsmitted to the idler gear by the spring is re leased by the above operation.

c) Gradually loosen and remove the 8 beari ng cap bolts of the camshaft in several pas ses in the sequence shown in the figure. T hen remove the bearing caps and the cam shaft.

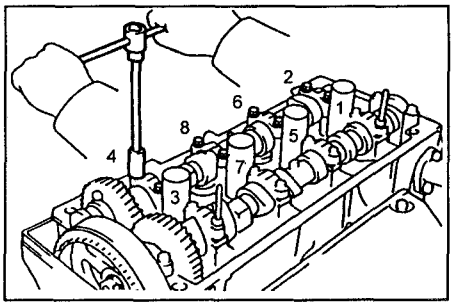

Note:

- If the camshaft does not come off after performing the specified operations, reins tall bearing cap No. 3 and tighten it with t wo bolts.

- Then sequentially loosen and unscrew the bolts, simultaneously trying to pull t he camshaft out by the gear.

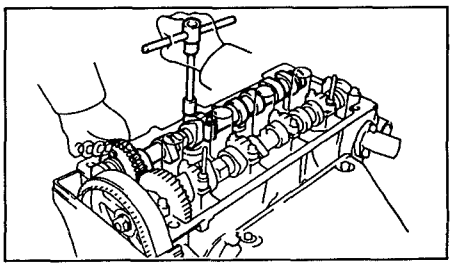

- Do not attempt to remove the camsha ft by applying excessive force or using a dditional levers and tools.

9.1.2. Remove the adjustment shim usin g a small screwdriver. 9.1.3. Deter mine the size (thickness) of the adjustm ent shim that provides the clearance in a ccordance with the technical specificatio ns.

a) Measure the thickness of the remo ved shim with a micrometer.

b) Using the formula, determine the thi ckness of the new adjustment shim tha t will provide the required thermal clea rance in the valves: Fo r the intake valves ..... N = T + (A - 0.20) mm

N - thickness of the new shi m T - thickness of the removed (worn) shim

A - the measured clearance in the given clu- sir

c) Select the adjustment washer whose thickness most closely matches the cal culated value

to the value.

Note: The shim washers come in 16 sizes (thickness values) ranging from 2.55 mm t o 3.30 mm in 0.05 mm increments.

9.1.4. Install a new adjustment shim on th e valve lifter. 9.1.5. Install the intake camshaft.

a) Turn the crankshaft pulley and positi on the exhaust camshaft so that its loca ting dowel is above the cut edge of the cylinder block head.

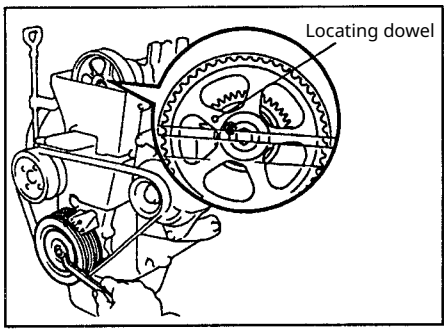

b) Apply a grease-type lubricant to the thrust s urfaces of the camshaft.

c) Mesh the intake camshaft gear with the exhaust camshaft gear, aligning the timin g marks on both gears.

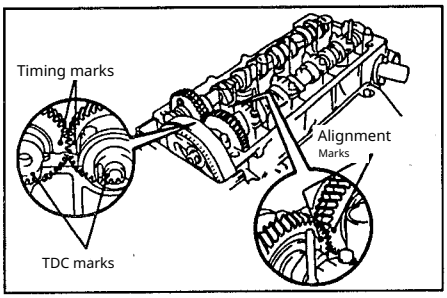

Note: it is necessary to distinguish the alignm ent marks from the TDC marks and not to use the latter in this case.

g) After that, rotate the camshaft into th e bearing caps while maintaining gear e ngagement.

Note: this camshaft position allows the cam lobes of cylinders 1 and 3 to evenl y press the lifters of the corresponding valves.

d) Reinstall the four camshaft bearing caps.

e) Apply a thin film of engine oil to the t hreads and under the heads of the bolts that secure the camshaft bearing caps.

f) Install and gradually tighten the eight b earing cap bolts in several passes followin g the specified sequence. Tightening torq ue..... 13 N·m

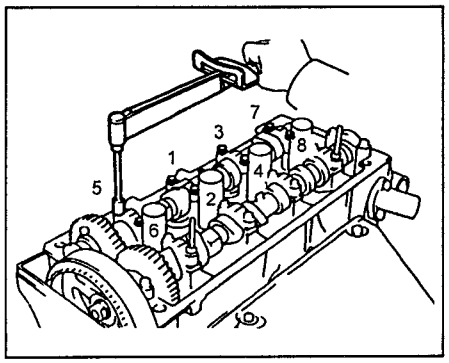

3) Remove the mounting bolt. h) I nstall the cap of the 1st bearing with th e mark ("arrow") facing forward.

Note: if the cap of the 1st bearing does no t fit into place, move the camshaft backwa rd using a screwdriver.

k) Apply a thin layer of engine oil to the thr eads and under the heads of the bolts of t he camshaft bearing caps.

l) Install and evenly tighten the 2 bolts o f the front bearing cap in several passes. Tightening torque .... 13 N·m 9.1.6. Check the valve clear ..... ances.

9.2. Adjust the valve clearances in the e xhaust valves. 9.2.1. Remove the adjustme nt shims. a) Rotate the crankshaft so that the lobe of the adjusta ble valve cam is oriented upward.

b) Position the valve lifter recess facing the front of the vehicle.

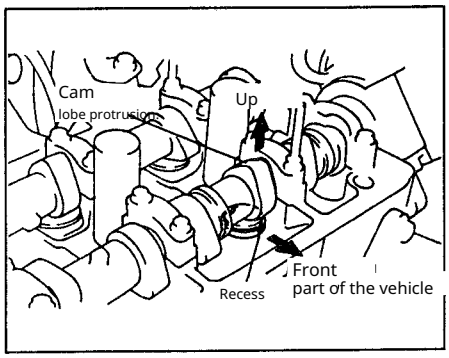

c) Using tool (A), press the pusher and place tool (B) between the camshaft and the pusher. After that, remove tool (A).

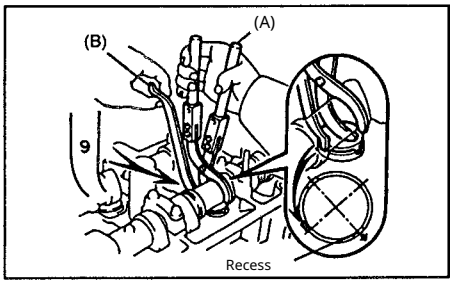

Note:

- Insert tool (B) at a slight angle from th e side marked with the number "9", as s hown in the illustration. The recess shou ld then be in the position shown in the il lustration.

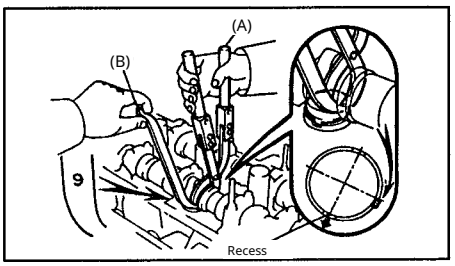

- The tool (B) should not be inserted too d eeply so as not to pinch the adjustment wa sher. To prevent jamming, insert the tool s moothly from the camshaft side of the inta ke valves, as shown in the illustration.

- The cam profile makes it difficult to fit t ool (B) under the 3rd cam from the intake camshaft side. To remove this adjustment shim, tool (B) should be positioned from the exhaust valve side.

g) Remove the adjustment shim using a small screwdriver and a magnetic rod.

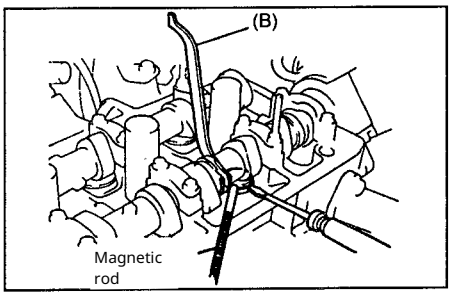

9.2.2. Determine the size (thickness) of the adjustment shim that ensures the clearance in accordance with the technical specifications.

a) Measure the thickness of the remo ved shim with a micrometer.

6) Using the formula, determine the thickness of the new adjustment shim that will provide the required thermal clearance in the valves:

For exhaust valves ..... N = T + (A - 0.30) mm.

N - thickness of the new shim

I - thickness of the removed (worn) shim

A - the measured clearance in the given clu- panel.

c) Select the adjustment washer whose thickness most closely matches the calculated value

to the value.

Note: Adjustment shims are available in 16 sizes (thickness values) from 2.55 mm to 3.30 mm in 0.05 mm increments.

9.2.3. Install the new adjustment washer.

a) Install the washer onto the valve lifter.

valve.

b) Using tool (A), press down on the lifter and remove tool (B).

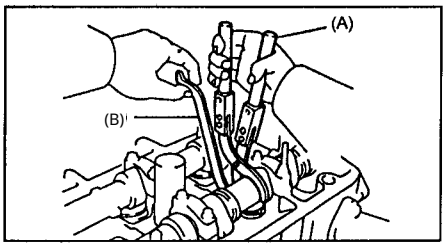

9.2.4. Check the thermal clearance in the cla-

panakh.

10. Install the cylinder head cover.

a) Remove the old sealant.

b) Apply a layer of fresh sealant to the areas shown in the illustration.

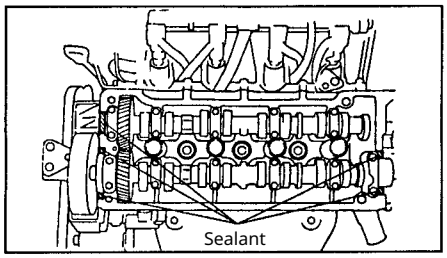

c) Install the gasket under the cylinder head cover.

d) Install the cylinder head cover and secure it with the 4 nuts placed on the sealing washers. Tightening torque for the nuts: 6 N·m .....

11. Connect high-voltage

the wires.

12. Connect the hoses of the crankcase ventilation system.

ventilation of the crankcase.

13. Connect the wiring harness.

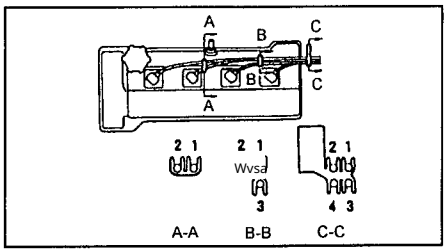

14. Connect the negative

terminal to the battery.

Timing belt

Removing the timing belt

1. Disconnect the negative terminal from the battery.

2. Remove the right-side engine shield

gatela.

3. Loosen the bolt of the coolant pump pulley.

4. Remove the alternator drive belt.

a) Loosen the tensioning bolt.

b) Loosen the adjustment bolt 8. Remove the wiring harness protector and disconnect the harness, then remove the belt.

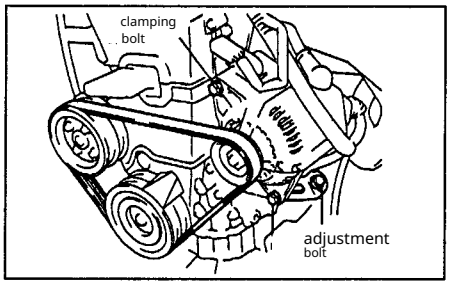

5. (7A-FE) Remove the air conditioning compressor drive belt.

6. Remove the washer reservoir.

7. Remove the power steering pump drive belt. a) Unscrew the tensioning bolt.

b) Unscrew the adjusting bolt and remove the belt.

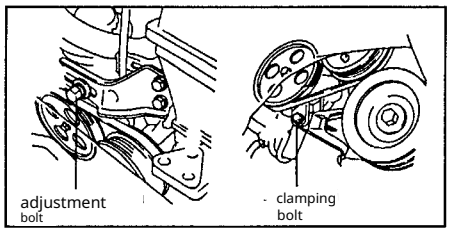

9. Disconnect the high-tension (high-voltage) wires.

10. Disconnect the crankcase ventilation system hoses.

11. Remove the cylinder head cover.

12. Remove timing belt cover No. 3.

13. (7A-FE) Remove the air conditioning compressor by disconnecting the electromagnetic clutch connector, the hose, and unscrewing the four mounting bolts.

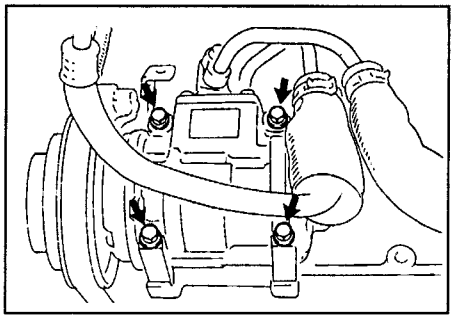

14. (7A-FE) Remove the compressor bracket by loosening 4 mounting bolts.

mounting.

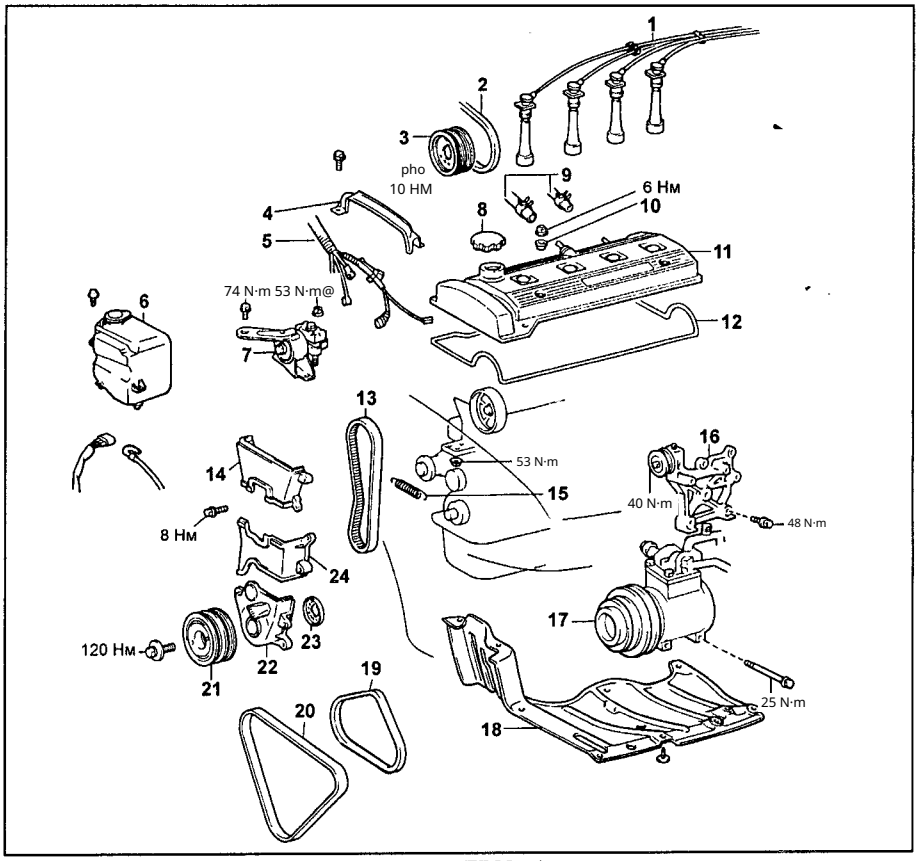

Removal and installation of the timing drive belt. 1 - high-voltage wires, steering control, wiring harness protection, wiring harness, 6 - washer reservoir, 7 - right engine mount, oil filler cap, 9 - crankcase ventilation hoses, 10 - sealing washer, 11 - cylinder head cover, 12 - gasket, 13 - timing drive belt, 14 - timing belt cover No. 3, 15 - tensioner pulley spring, 16 - air conditioning compressor bracket, 17 - air conditioning compressor, 18 - right engine shield, 19 - air conditioning compressor drive belt, 20 - alternator drive belt, 21 - crankshaft pulley, 22 - timing belt cover No. 1, 23 - timing belt guide, 24 - timing belt cover No. 2.

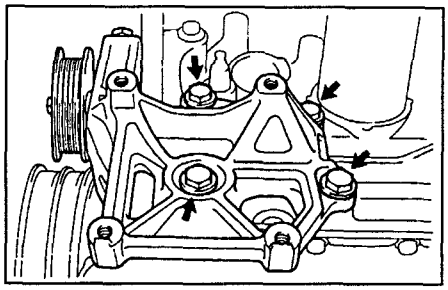

15. Unscrew the four bolts and rem ove the coolant pump pulley.
16. Remove the timing belt cover
TIMING BELT COVER No. 2.
17. Set the piston of the first cylinder t o TDC of the compression stroke.
a) Rotate the crankshaft pulley and align the groove on the pulley with the "0" ma rk on timing belt cover No. 1.

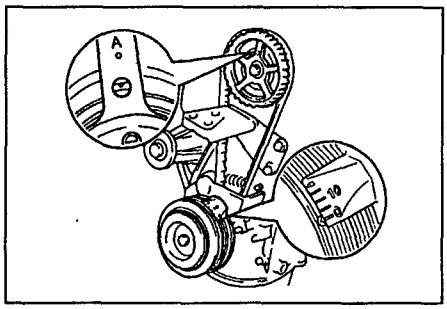

b) Ensure that the hole in the camshaft dr ive pulley aligns with the mark on its bear ing cover.

If not, rotate the crankshaft one full tur n (360°). 18. Remove the crankshaft pul ley.
a) Using a suitable tool, loosen the r etaining bolt of the pulley.
pulley.

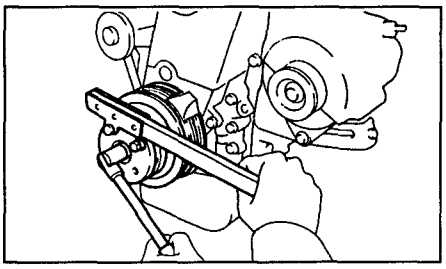

b) Using a puller, remove (press off) the crankshaft pulley.

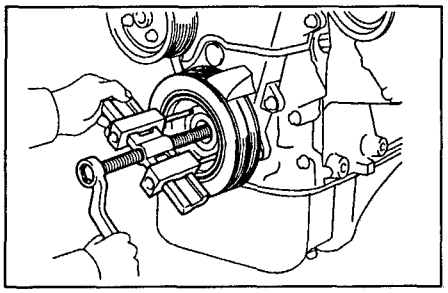

19. Remove timing belt cover No. 1.

20. Remove the timing belt guide.

21. Disconnect the right engine mount by unscrewing 3 bolts and 3 nuts.
—leniya.

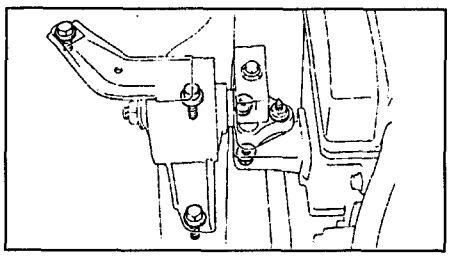

22. Remove the timing belt. Note: If t he belt is intended to be reused, draw an arrow indicating the belt's direction of tra vel (the direction of the engine crankshaft rotation) and mark the belt and pulleys a s shown in the illustrations.

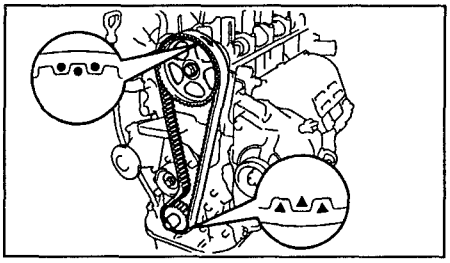

a) Loosen the bolt securing the tensi oner pulley, move it until it stops to t he left, and then temporarily secure i t in that position with the same mou nting bolt.

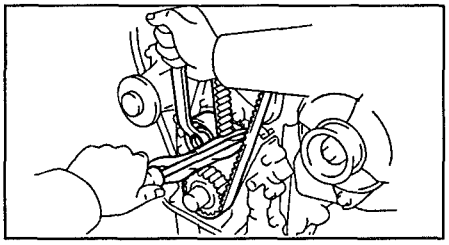

b) Remove the timing belt. 23. Rem ove the tensioner pulley and the tension s pring by fully unscrewing the tensioner p ulley mounting bolt.

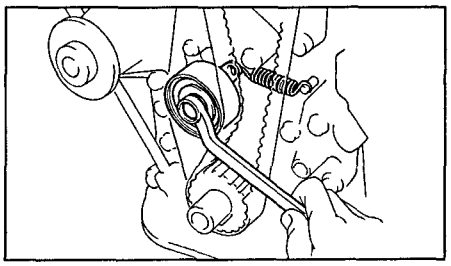

24. If necessary, remove the toothed cra nkshaft pulley. If difficulties arise, use tw o screwdrivers. Note: to prevent dam age to the cylinder block components, pl ace a rag as shown in the illustration.

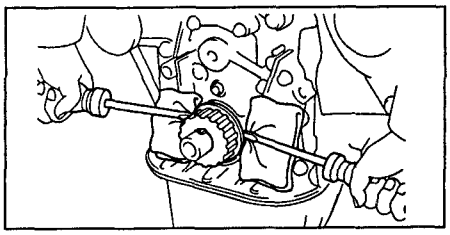

25. If necessary, remove the camshaft ti ming gear. Hold the camshaft to prevent it from turning by placing an adjustable wrench on its hexagonal section, then loo sen the retaining bolt

and remove the gear.

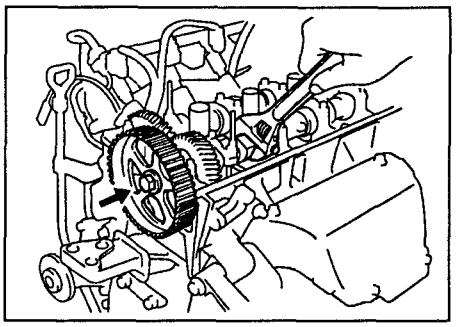

Note: when performing this operation, do not damage the cylinder head with an adj ustable wrench. Installat ion of the timing belt

Note: do not allow water or oil to get on t he toothed camshaft and crankshaft pull eys and keep them

clean.

1. Install the camshaft toothed pulley (if i t was removed). a) Align the locating dowel on the camshaft nose with the g roove on the toothed pulley and fit the pulley onto the camshaft.

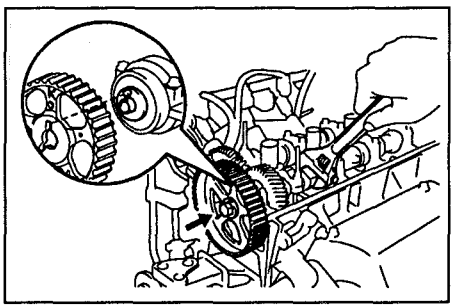

b) Temporarily install the mounting bolt-
removal of the pulley.
c) While holding the camshaft by its hexagon al section with an adjustable wrench, tighten the camshaft pulley retaining bolt.

Tightening torque.. ..... 59 N·m
2. Install the crankshaft timing gear (if it was removed).
a) Align the key on the crankshaft with t he keyway of the timing gear.

b) Push the gear onto the crankshaft snout until it seats, with the rolled edge turned in ward.

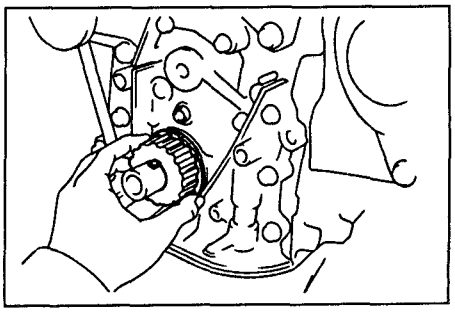

3. Temporarily install roller-spring tensioner.

a) Secure the roller with a bolt, but do not tighten—reviving him.

b) Install the spring.

c) Pull the roller fully to the left and tighten the bolt.

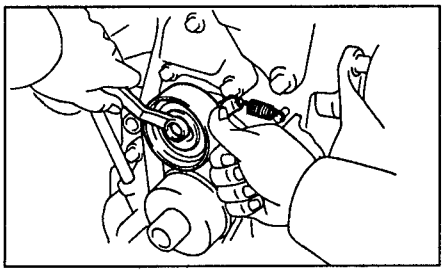

4. Install the timing belt. a) Set the cranksh aft and camshaft(s) to the positions shown i n the illustration and align the timing marks .

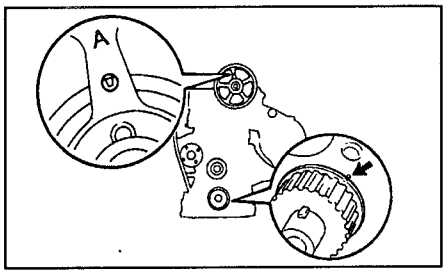

b) Install the timing belt, following the marks and ensuring the required tensi on on the section between the toothed pulleys of the crankshaft and the cam shaft. Note: in case of re-use-

align the belt usage to-

note the previously applied marks on the pulley s and the belt and observe the direction of belt rotation.

c) Slowly release the bolt securing the te nsioner roller.

g) Tighten the pulley mounting bolt ка-натяжителя.

5. Install the timing belt guide

for the timing drive.

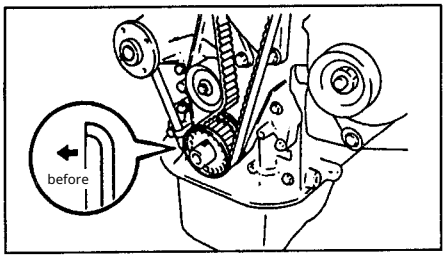

6. Install the right engine mount by threading i n 3 bolts and 3 nuts of the mounting. 7. Inst all the crankshaft pulley. a) Align the key on t he crankshaft with the keyway of the pulley and fit the pulley onto the shaft.

b) Using a suitable tool, thread in and tig hten the crankshaft pulley retaining bolt. 8. Install the water pump pulley.

9. (7A-FE) Install the air conditioning co mpressor bracket by threading in 4 mou nting bolts.

10. (7A-FE) Install the compressor

of the air conditioner, by tightening 4 mounting bolts— 9. Remove the oil dipstick from the guide.
—leniya.

11. Install the timing belt cover

Timing №3.

12. Install the cylinder head cover.

a) Remove the old sealant.

b) Apply a layer of fresh sealant

to the areas shown in the illustration.

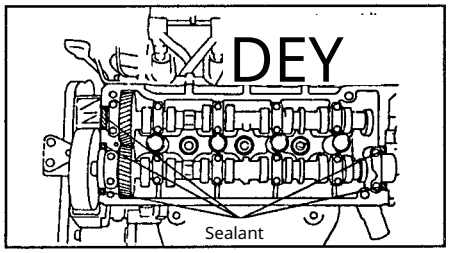

c) Install the gasket under the cylinder h ead cover.

g) Install the cylinder head cover, securi ng it with the four nuts fitted onto the s ealing washers. 13. Connect the cran kcase ventilation system hoses.

14. Connect the high-voltage (spark) wires.

15. Connect the wiring harness and install the wiring-harness protection.

16. Install the power steering pump drive be lt. 17. (7A-FE) Install the air conditioning c ompressor drive belt.

18. Install the alternator drive belt.

19. Tighten the coolant pump pulley mou nting bolts. 20. Install the right-ha nd engine undercover.

21. Connect the cable to the negative ter minal of the battery.

Cylinder Head Cylinder Head Remo val

1. Disconnect the cable from the neg ative terminal of the battery.

2. Drain the coolant. 3. Remove t he timing belt (see the "Timing Belt" section). 4. (With automatic tra nsmission) Disconnect the cable

throttle valve control. 5. Disconnect the accelerator cable. 6. Disconnect the inje ctor connectors. 7. Remove the power st eering pump from the adjustment bar by u nscrewing 3 mounting bolts

—leniya.

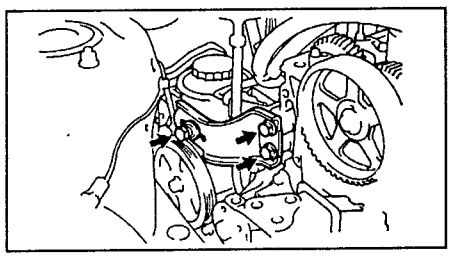

8. Disconnect the following hoses: the br - ake booster vacuum hose,

- the vacuum hose of the absolute pressure sensor in the intake manifold,

- power steering system bypass air hoses

the guide.

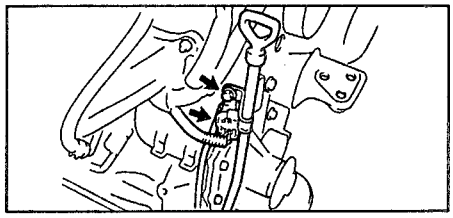

10. Remove manifold bracket No. 2. 1 1. Remove the wiring harness cover. 12 . Remove the coolant inlet pipe.

a) Unscrew the two nuts and disconnec t the coolant temperature gauge sens or connector. b) Disconnect the coolant hose and remove the intake pi pe from the cylinder head. 13. Disconn ect the electrical wiring connect ors.

14. Disconnect the fuel hoses.

15. Disconnect the radiator hoses.

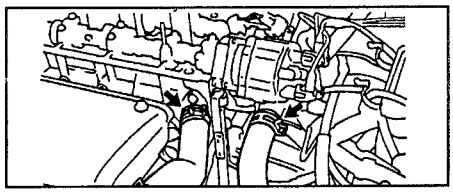

16. Remove the combined ignition assembly gania.

17. Disconnect the heater hose. 18. Dis connect the exhaust system inlet pipe.

19. Remove the alternator.

20. Remove the manifold support bracket.

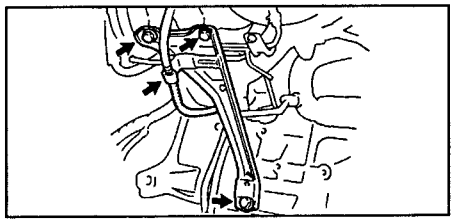

21. Remove the camshafts

intake and exhaust valves.

Note: because the axial clearance The play of the camshaft is very smal l, so to prevent seizing and/or damag e to the shaft during its re- moveme nt it is necessary to hold the shaft in the horizontal position; for this it is ne cessary to follow the disassembly procedure described below. A. Remove the intake v alve camshaft.

a) Rotate the intake valve camshaft so that the locating hole of the idler gear is in the position shown in the illustration.

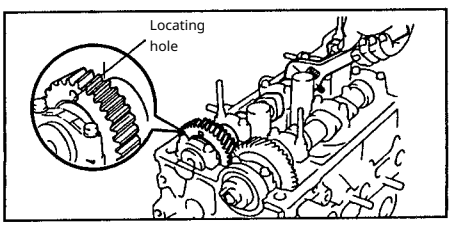

In this case the lobes of the intake camshaft press evenly on the valve tappets of cylinder s 1 and 3.

b) Unscrew 2 bolts and remove the c over of the No. 1 camshaft bearing - auxiliary camshaft.

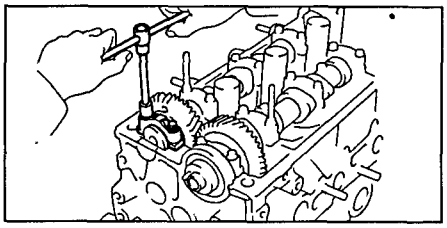

c) Secure the auxiliary intake camshaft g ear with the locating bolt from the drive gear. Recommended locating bolt: M6× 1, length 16–20 mm.

.....

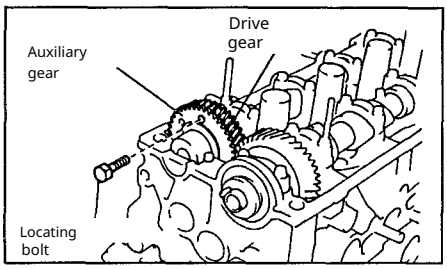

Note: When removing the camshaft, ensure that this operation relieves the torsional loa d on the auxiliary gear's leaf spring.

g) Evenly loosen the bolts of the intake va lve camshaft bearing caps in several pass es in the order shown in the illustration, a nd remove the bolts.

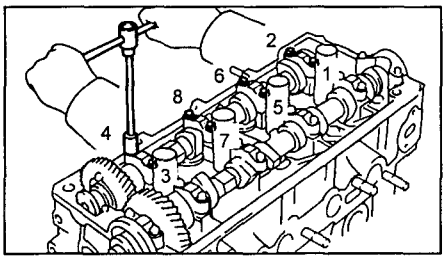

d) Remove the intake valve camshaft beari ng caps and then remove the camshaft its elf. Note:

- Do not apply excessive force and d o not attempt to use a screwdriver or a ny other object as a lever.

- If the camshaft does not come out, ins tall the cap of the 3rd bearing, tighten it, then loosen the bolts while simultaneous ly pulling the shaft out by the gear.

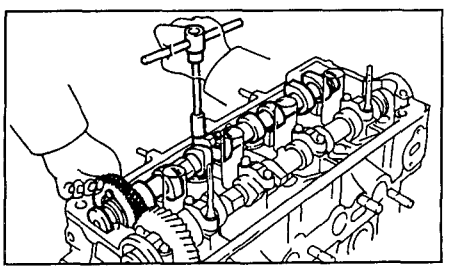

B. Remove the exhaust camshaft.

a) Using a crescent wrench, turn the e xhaust camshaft so that the locating p in is in the position shown in the illustr ation.

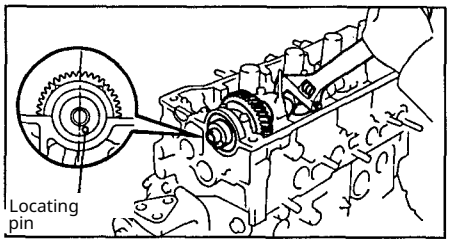

In this case the cams of the exhaust cams haft press evenly on the valve lifters of cyl inders 1 and 3. b) Unscrew the 2 bolts an d remove the cover of the No. 1 ca mshaft bearing

auxiliary camshaft.

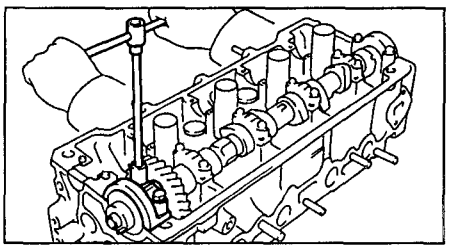

b) Evenly loosen the bolts of the exhaust val ve camshaft bearing caps in several passes in the order shown in the illustration, and r emove the bolts.

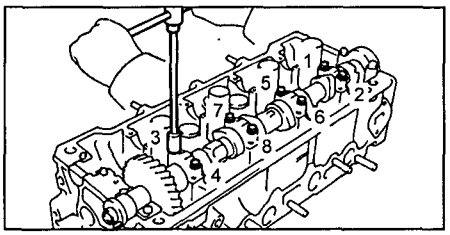

g) Remove the exhaust valve camshaft b earing caps and then remove the camsh aft itself. Note:

- Do not apply excessive force and do not attempt to use a screwdriver or any other object as a lever.

- If the camshaft does not come out, inst all the cap of the 3rd bearing, tighten it, t hen loosen the bolts while simultaneousl y pulling the shaft out by the gear. Disass emble the intake valve camshaft.

22.

a) Clamp the camshaft by its hexagonal section in a vise. Note: be careful not to damage the camshaft.

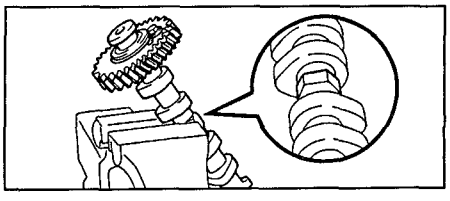

b) Insert the service bolts (A) and (B) into t he service holes of the camshaft auxiliary gear

of the camshaft.

c) Using a screwdriver, turn the camshaft auxiliary gear clockwise and remove the service bolt (C).

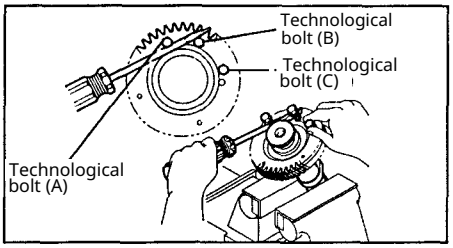

Attention: do not damage the camshaft.

c) Remove the retaining ring.

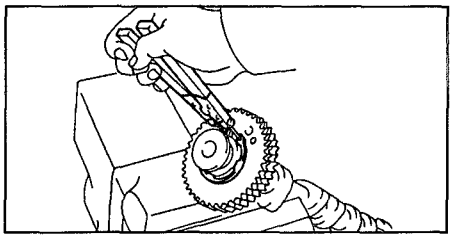

d) Remove: the spring washer (1), the i ntake camshaft auxiliary gear (2), and t he gear spring (3).

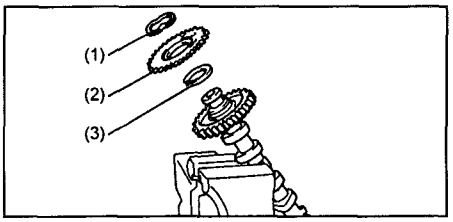

23. Remove the cylinder head. a) Using a s uitable tool, gradually loosen and turn o ut the cylinder head bolts in several pas ses in the sequence shown in the illustr ation, then remove the 10 washers.

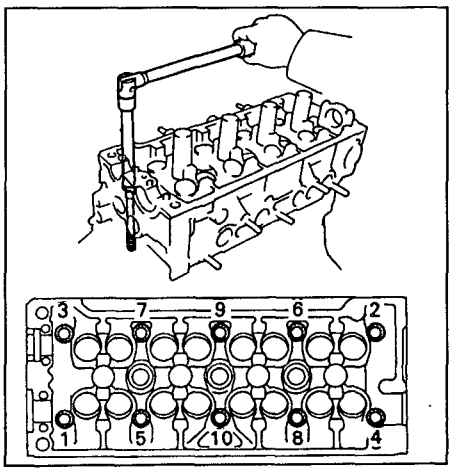

Attention: warping or cracking of the cylin der head can result from not following the correct sequence when loosening the cyli nder head retaining bolts.

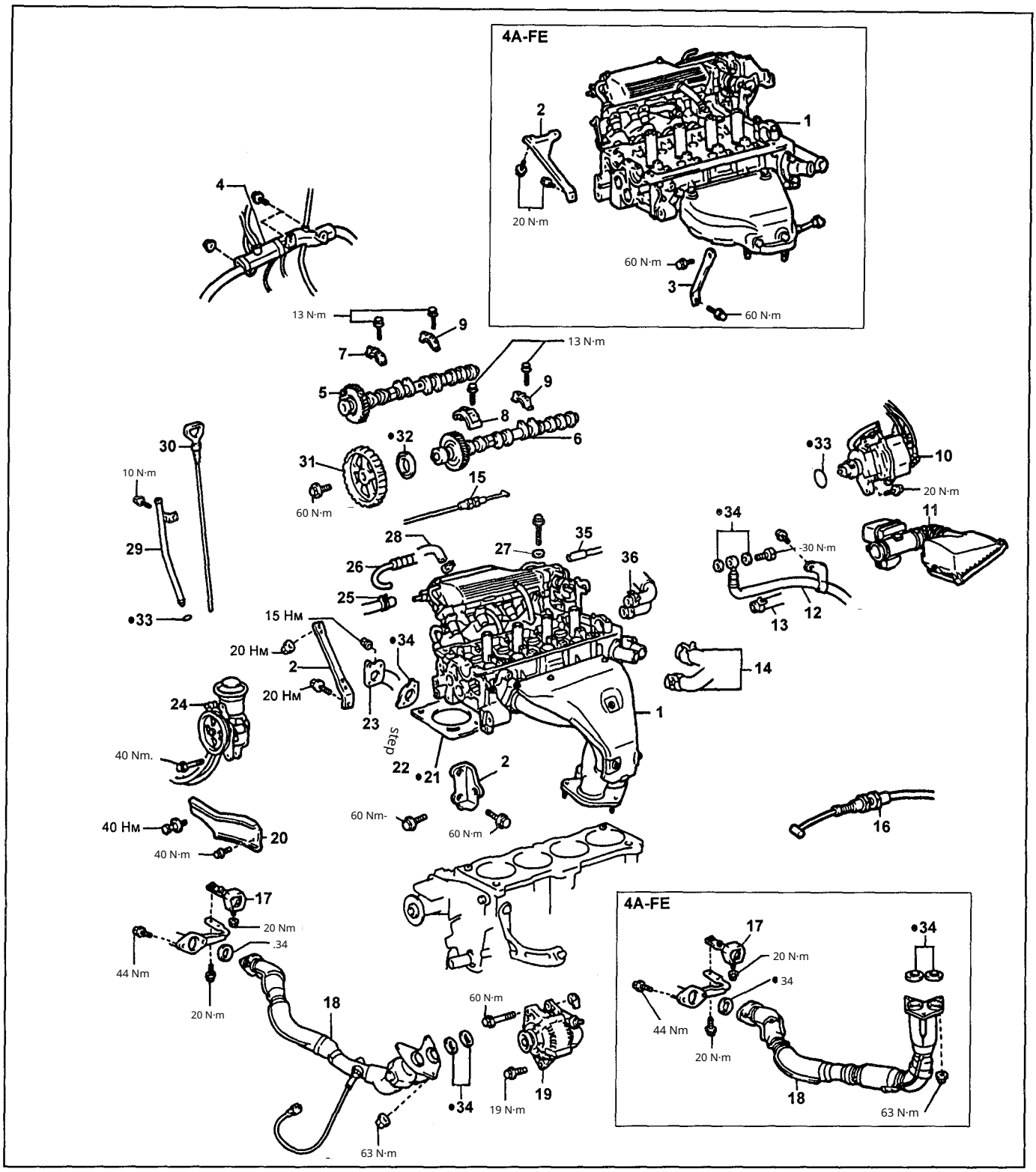

Removal and installation of the cylinder head (4A-FE, 7A-FE). 1 - cylinder head with intake manifold, 2 - manifold stay No. 2, 3 - manifold stay, 4 - wiring harness protector, 5 - camshaft No. 1 (intake valves), 6 - camshaft No. 2 (exhaust valves), 7 - camshaft bearing cap No. 1, 8 - camshaft bearing cap No. 2, 9 - camshaft bearing cap No. 3, 10 - ignition assembly, 11 - air cleaner cover with duct, 12 - fuel inlet hose, 13 - fuel return hose, 14 - radiator hose, 15 - accelerator cable, 16 - throttle control cable, 17 - exhaust pipe bracket No. 1, 18 - exhaust manifold, 19 - alternator, 20 - adjusting plate, 21 - cylinder head gasket, 22 - power steering bypass hose, 23 - coolant inlet pipe, 24 - power steering pump, 25 - brake booster vacuum hose, 26 - intake manifold absolute pressure sensor vacuum hose, 27 - washer, 28 - power steering bypass hose, 29 -oil dipstick guide, 30 - oil dipstick, 31 - camshaft timing pulley, 32 - oil seal, 33 - O-ring, 34 - gasket, 35 - evaporative emission system vacuum hose, 36 - heater hose.

b) Lift the cylinder head off the locating pins and place it on the workbench, supporting it with wooden blocks beneath. Attention: if the cylinder head is difficult to remove, you may use a screwdriver by inserting it into the gas joint as shown in the illustration. However, take care not to damage the surfaces of the head and block, nor the cylinder head gasket.

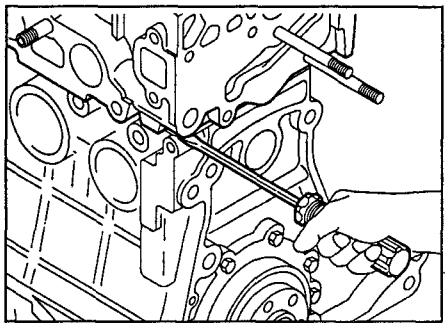

Installation of the cylinder head

1. Install the cylinder head.
a) Install a new cylinder head gasket, taking into account the position of the dowels on the block. b) Lower the cylinder head onto the gasket.

Note: Before installation, apply a thin layer of engine oil to the bolt threads and under the bolt heads.

c) Using a suitable tool, install and gradually tighten the 10 cylinder head retaining bolts in several passes (at least 3), following the sequence shown in the illustration. Tightening torque..

.....29 Н·м

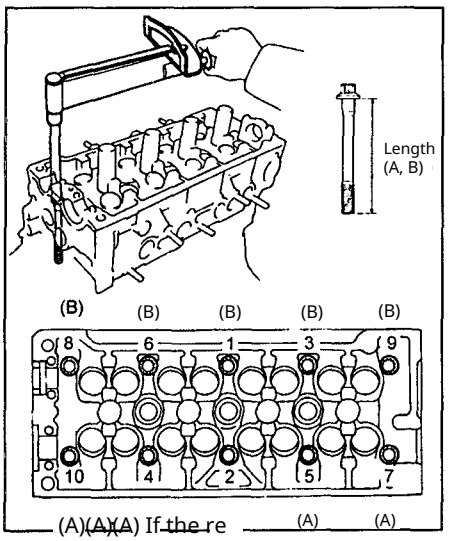

(A)(A)(A) If the required torque is not reached when tightening the bolt, replace the bolt. Note: the head mounting bolts have different lengths: 90 mm (A) and 108 mm (B). When installing, be careful not to mix them up.

(A) (A)

g) Mark the edge of the bolt facing the front of the engine (the side opposite the power take-off) with paint, as shown in the figure.

d) Tighten all bolts in the sequence indicated above by turning them an additional 90°.
e) Again tighten all bolts in the sequence indicated above by another 90°.

f) Ensure that all bolt marks are oriented 180° from their original position.

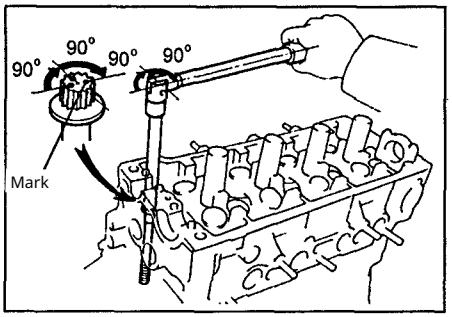

2. Assemble the intake valve camshaft.

a) Secure the camshaft in a vise by clamping it on the hexagonal section.

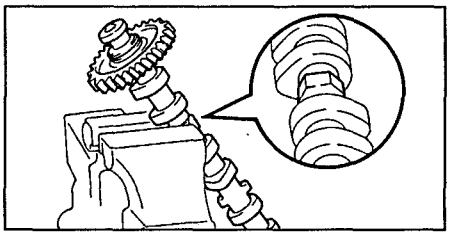

Note: be careful not to damage the camshaft.

b) Install the following parts: (1) the camshaft gear spring,

(2) an idler gear,
(3) a wave washer.

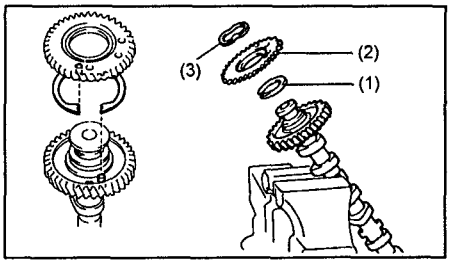

c) Use pliers to install the retaining ring.

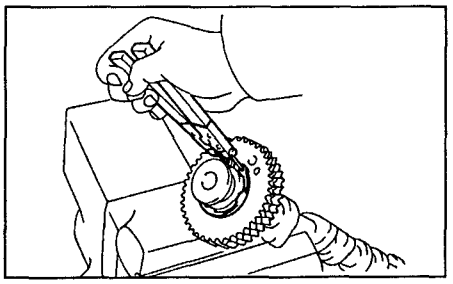

g) Insert the service bolts (A) and (B) into the locating hole of the auxiliary camshaft gear.

d) Using a screwdriver, turn the auxiliary camshaft gear clockwise.

Align the arrow and match the holes of the driven camshaft gear and the idler gear, then install the service bolt (C).

Note: be careful not to damage the camshaft.

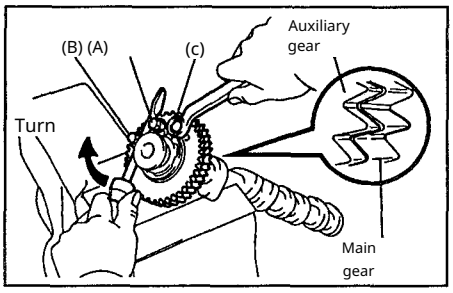

3. Install the intake and exhaust camshafts. Note: When installing the camshafts, it must be considered that the axial clearance is very small, so the shafts must be laid into the bearing seats strictly horizontally, without skewing, to avoid jamming and/or damaging the shafts.

A. Install the exhaust camshaft.

a) Apply a grease lubricant to the end faces of the camshaft.

b) Place the exhaust camshaft into the cylinder head so that the locating pin is positioned slightly to the right of the camshaft's vertical axis, as shown in the illustration. In this position, the lobes for cylinders 1 and 3 press equally on the tappets of the respective valves.

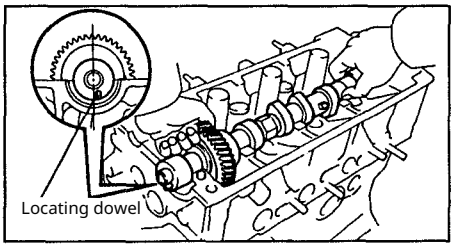

c) Remove any remaining old sealant. g) Apply sealant to cover No. 1 of the camshaft bearing as shown in the illustration.

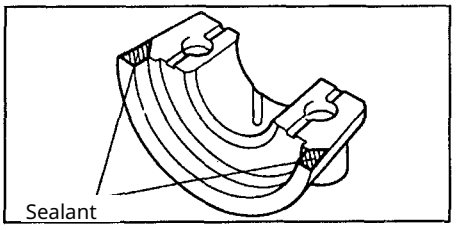

d) Install the camshaft bearing caps on the corresponding journals according to the numbers stamped on them, as shown in the figure; the arrows on the bearing caps must point toward the front of the engine (toward the crankshaft pulley).

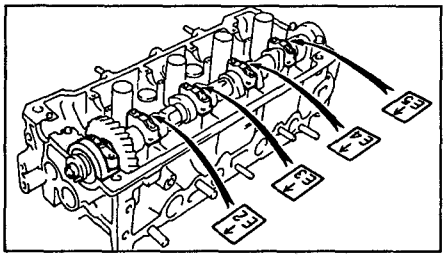

e) Apply engine oil to the threads and th e back side of the bolt heads. f) Install a nd tighten the bearing cap bolts evenly i n several passes in the sequence shown in the figure. Tightening torque.

..... 13 N·m

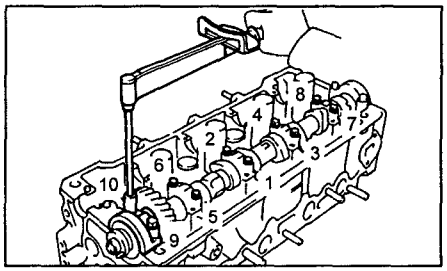

3) Apply grease to the working edge of the oil seal.

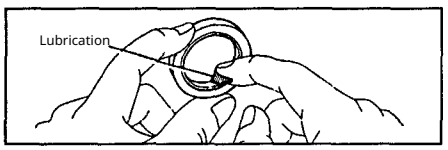

j) Using a suitable driver, press in the camshaft oil seal.

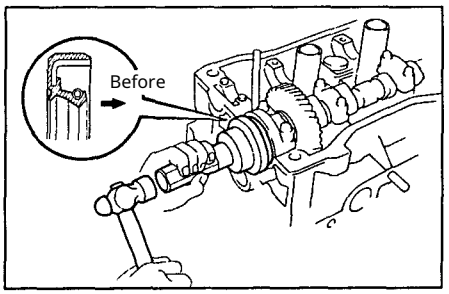

Note:

- The seal should be installed as shown in t he illustration. The seal is pressed i
- nto the head bore until it seats fully. B. In stall the

intake camshaft.

a) Insert the service pin of the exhaust c amshaft so that it is positioned slightly a bove the edge of the cylinder head, as s hown in the illustration.

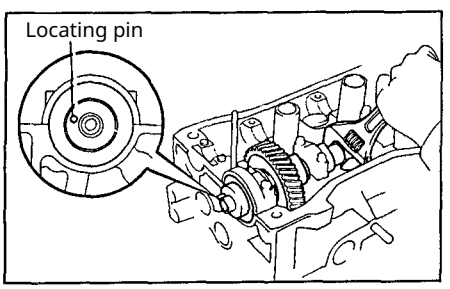

b) Apply grease to the thrust (end) faces of the camshaft.

c) Mesh the intake and exhaust camshaft g ears by aligning the timing marks on those gears with each other. Note: the camshaft gears also have "timing marks" or TDC mar ks; do not c
onfuse them with the alignment marks.

alignment marks.

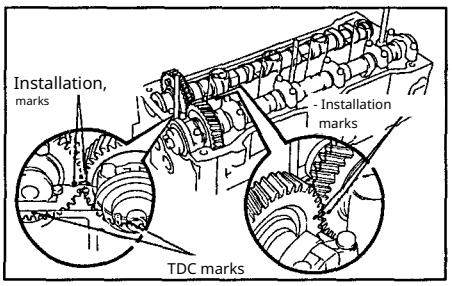

g) While keeping the gears engaged, p lace the intake camshaft into the beari ng seats. In this position, the cams of the 1st and 3rd cylinders evenly press on the tappets of the corresponding v alves, which facilitates the installation of the camshaft.

d) Install the camshaft bearing caps onto t he corresponding journals according to th e stamped numbers on them, as shown in the illustration; the arrows on the bearing caps should point toward the front of the engine (toward the side opposite the pow er take-off).

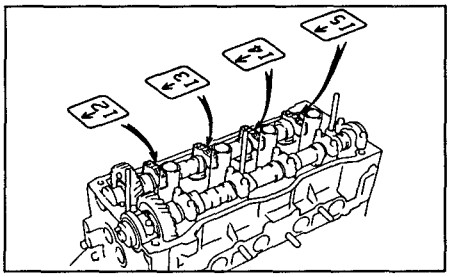

e) Apply engine oil to the threads and t he back side of the bolts on the camsha ft bearing cap covers.

f) Evenly tighten the bearing cap mounting b olts in several passes in the sequence shown in the illustration. Tightening torque

..... 13 Н·м

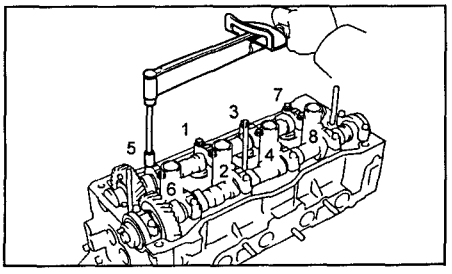

3) Remove the service bolt that connects th e auxiliary and main sprockets of the intak e camshaft.

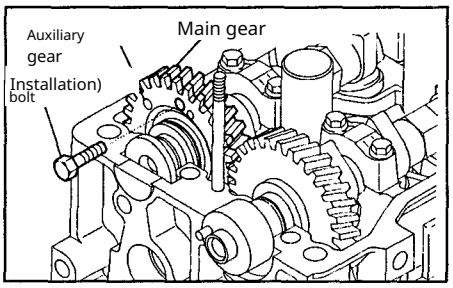

i) Install the cover of the 1st camshaft bearing for the intake valves with the a rrow pointing forward (toward the timi ng drive).

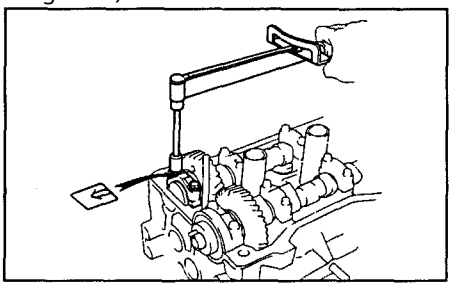

Attention: if the No. 1 bearing cap does not fit into place, move the camshaft f orward and backward along its axis wit h a screwdriver.

k) Tighten the bearing cap bolts evenly in sev eral passes. Tightening torque...

..... 13 N·m

l) Turn the exhaust camshaft clockwise by its hex portion by one revolution (from T DC to BDC) so that the locating pin is in t he position shown in the illustration.

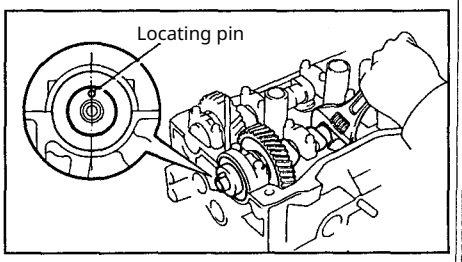

m) Ensure that the timing marks of the int ake and exhaust camshaft sprockets are a t the extreme top position and that the T DC timing marks ("timing marks") align w ith each other, as shown in the illustratio n.

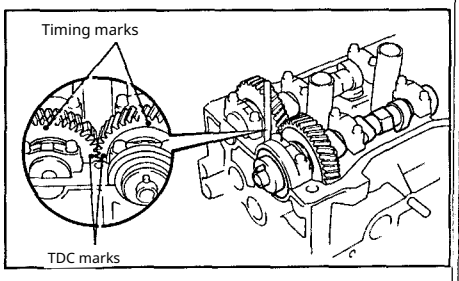

4. Inspect and adjust the valve clearance s (see the section "Inspection and Adjust ment of Valve Lash").

Caution: From this point, the installation of the cylinder head is performed in the r everse order of removal.

Engine Block

Operations Before Disassembly

1. (Models with a manual transmission)
a) Remove the clutch pressure plate and clutch disc.
6) Remove the flywheel by unscrewing the 6 bolts.

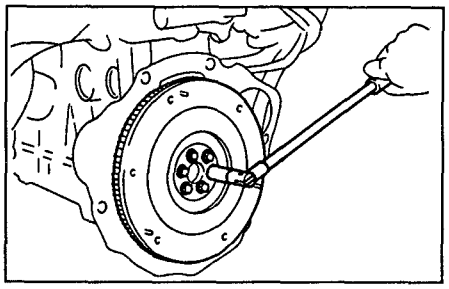

Note: before removing the flywheel or the to rque converter drive plate, mark their positio ns to avoid disrupting the balance when reins talling them.

(Models with automatic transmission)
Remove the torque converter drive plat e together with the front and rear space r bushings by loosening the 6 bolts.

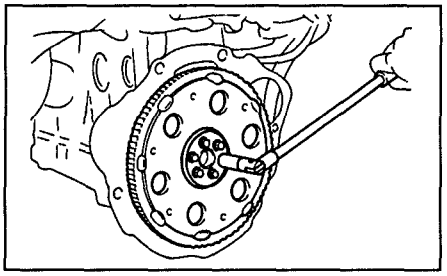

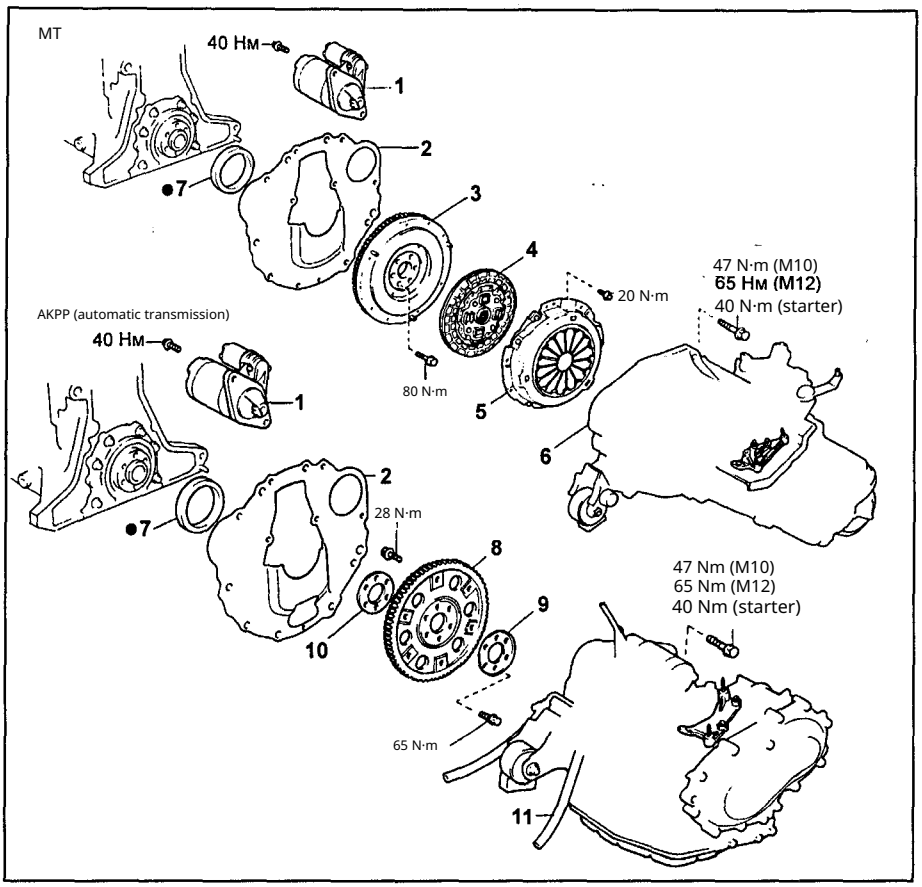

Removal and installation of the flywheel and torque converter drive plate (A-series e ngines). 1 - starter, 2 - rear plate of the cylinder block, 3 - assembled flywheel, 4 - clu tch disc, 5 - clutch cover, 6 - manual transmission, 7 - oil seal, 8 - torque converter dri ve plate, 9 - rear spacer sleeve, 10 - front spacer sleeve, 11 - automatic transmission.

2. Remove the rear plate of the block. 8. Remove the right engine mount of the cy linders by unscrewing 2 bolts. unscrewing 3 bolts.

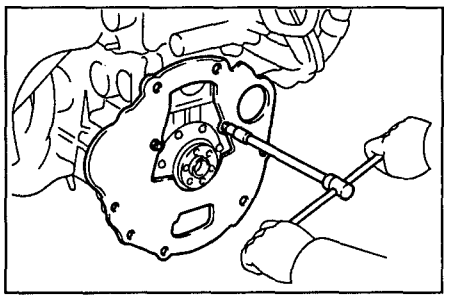

9. Remove the coolant pump (see the \ "Cooling system\" chapter). 10. Remo ve the oil filter. 11. Remove th e drain plug for draining coolant from the cylinder block. 12. Using a suitabl e tool, remove the oil pressure

sensor.

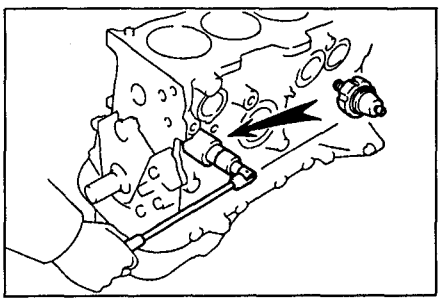

3. Mount the engine on a stand (machine) f or disassembly.
4. Remove the air conditioning compres sor. 5. Remove the timing belt and the ti ming drive toothed pulleys (see the \"Ti ming belt\" section).
6. Remove the cylinder head (see the \" Cylinder head\" section).
7. Remove the alternator and the tensioning bracket, remove the knock sensor by un screwing 2 bolts.

13. Using a suitable tool,

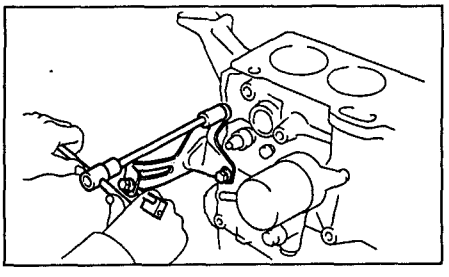

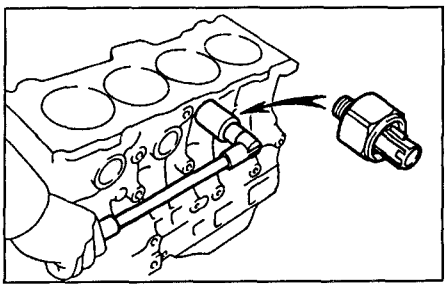

14. Remove the oil pan and the oil picku p with the mesh filter (see the "Lubricati on System" chapter). 15.
Remove the oil pump (see the "Lubricati on System" chapter).

Final assembly

1. Install the oil pump (see the "Lubric ation System" chapter).
2. Install the oil pan and the oil pickup with the mesh filter (see the "Lubricati on System" chapter).
3. Install the knock sensor using a suitable to ol.
4. Install the oil pressure sensor. 5. Install the coolant drain plug.

6. Install the oil filter. 7. Install the c oolant pump (see the "Cooling System" ch apter).

8. Install the right engine mount and secure it with 3 bolts Tightening torque.....51 N·m .....
9. Install the alternator. 10 . Install the cylinder head (see the "Cylin der Head Installation" section).

11. Install the timing belt and pulleys (s ee the "Timing Belt Drive" section).

12. Install the distributor or the combined ig nition unit. 13. Install the air conditioning c ompressor.

14. Remove the engine from the assembly stand.

15. Install the rear engine plate and secur e it with 2 bolts. Tightening torque.....6 N·m 16. (Manual transmission models)

Install the flywheel and gradually tighten t he flywheel mounting bolts in multiple pas ses in the sequence shown in the illustratio n.

Tightening torque. .....80 Н·м

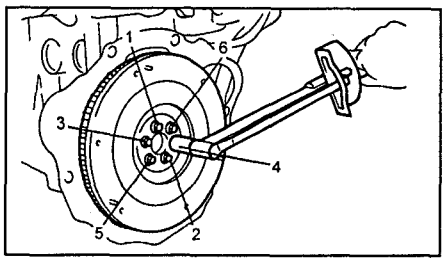

17. (Automatic transmission models)

Install the front plate of the torque conver ter.

a) Install the front spacer bushing on the crankshaft, ensuring that the side of the bushing with the chamfer faces toward the shaft, as shown in the illustration.

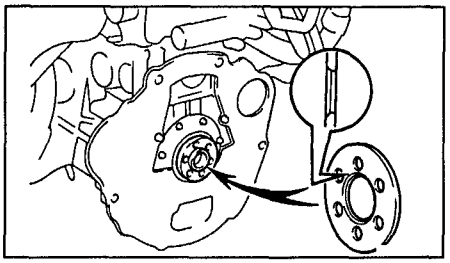

b) Install the drive plate and the rear spa cer bushing onto the crankshaft.

c) Screw in and tighten the fastening bolts evenly, in several passes, following the spe cified sequence.

Tightening torque. .....65 Н·м

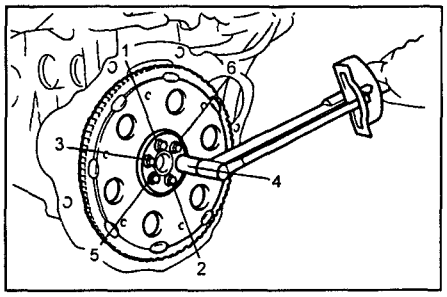

18. (Manual transmission models)

Install the clutch disc and pressure plate. N ote: if necessary, inspect the clutch assembl y before installation.

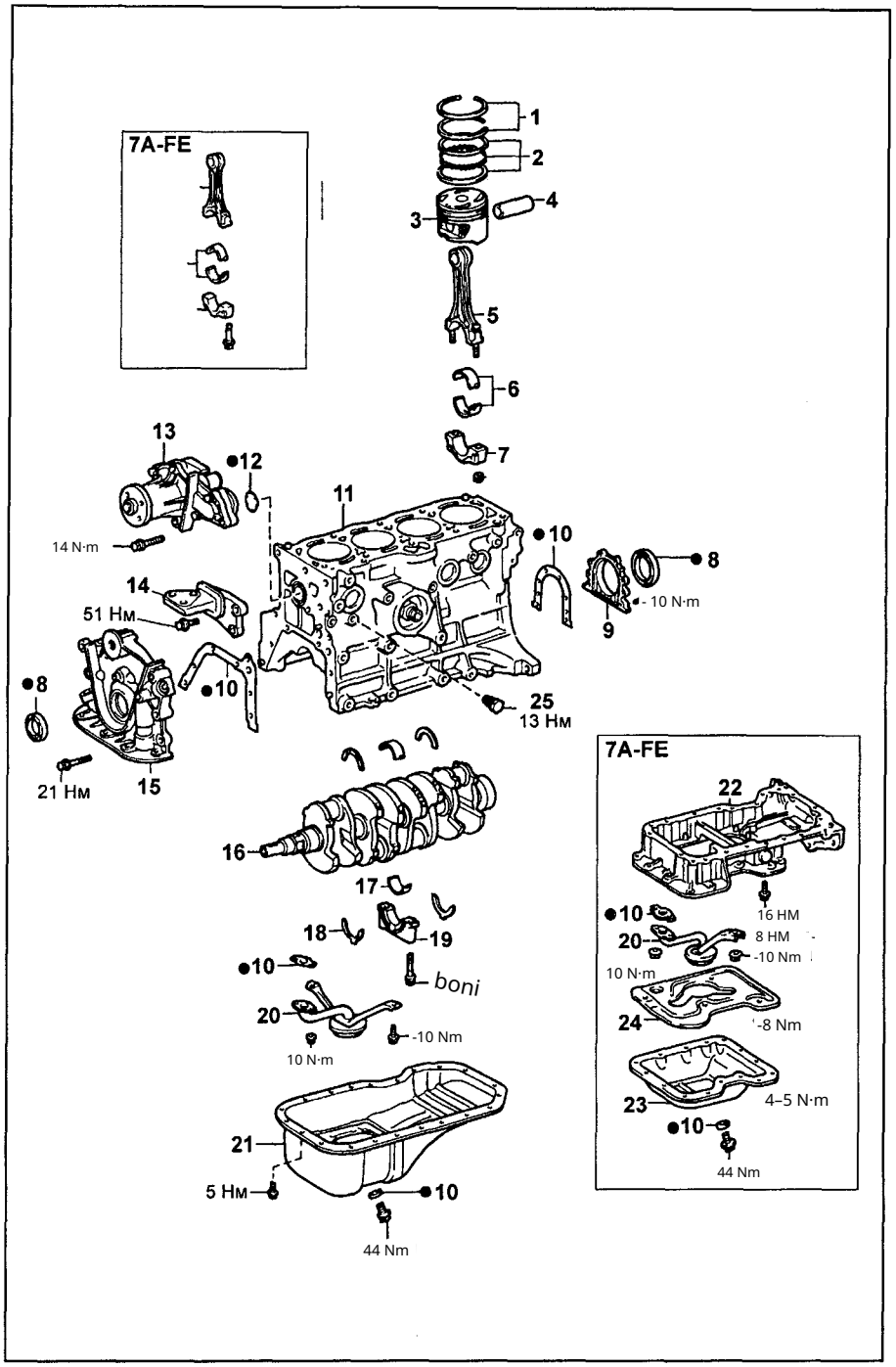

Engine block (4A-FE, 7A-FE). 1 compression rings, 2 oil control ring, 3 - pist on, 4 - pisto n pin, 5 - connecting rod, 6 - connecting rod bearing shells, 7 - connecting rod cap, 8 - oil seal, 9 - rear oil seal retainer, 10 gasket, 11 engine block, 12 - O-ring, 13 - coolant pump, 14 - right engine mount, 15 - oil pump, 16 - crankshaft, 17 - main bearing shells of the cr ankshaft, 18 - thrust half-ring, 19 - main bearing cap, 20 oil pickup, 21 oil pan, 22 - upper part of the oil pan, 23 - lower part of the oil pan, 24 - oil baffle, 25 - coolant drain plug.

Engine 4A-GE

Checking and adjusting valve clearances

Warning: checking and adjusting valve clearances should be performed when the engine is started on a cold engine.

1. Set the piston of the 1st cylinder to the TDC position on the compression stroke.
   a) Remove the oil filler cap necklines.
   b) Ensure that the mark on the intake camshaft is visible valves.

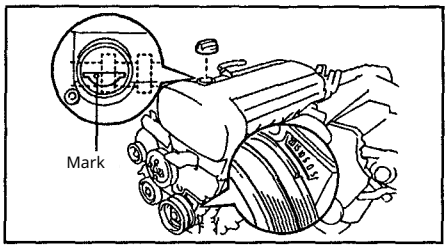

2. Remove timing belt cover No. 3 by unscrewing the 4 mounting bolts. 3. Remove cylinder head cover No. 2.

4. Disconnect the high-tension leads.

5. Remove the cylinder head cover after first removing the reservoir wiper washer.

6. Check the valve clearance in the valves marked in the figure.

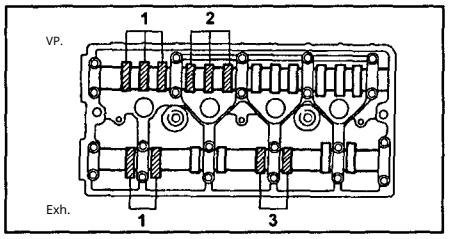

a) Using a feeler gauge, measure the clearance between the valve lifter and the camshaft lobe heel.
b) Record the values of any clearances that fall outside the specified limits indicated in the technical specifications; these values will be used to select an adjustment shim of the required size.

Nominal cold valve clearance: Intake 0.19–0.29 mm Exhaust 0.39–0.49 mm

7. Rotate ..... the crankshaft one revol ..... ution (360°) and again align the groove on the pulley with the corresponding mark as described in item 1, and check the clearances of the valves indicated in the illustration by repeating the procedure in item 6.

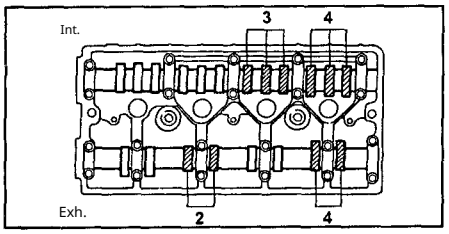

7. Adjust the thermal clearance in in the valves.

Note: on this engine removal of the camshafts and the valve lifters is required to adjust the valve clearance.

of the valve lifters.

7.1. Remove the timing belt (see the "Timing Belt" section). Rotate the camshafts and do not

7.2. With the timing belt removed, do not turn the crankshaft to avoid piston-to- valve contact. Before removihg the camshafts, turn the crankshaft 45° counterclockwise (see illustration).

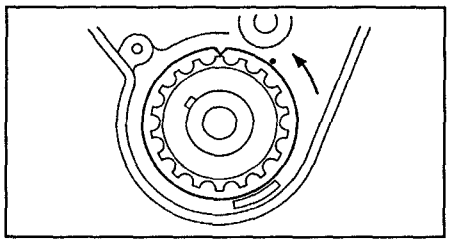

Before installing the timing belt, first align the marks on the camshaft pulleys and the cylinder head cover, then turn the crankshaft 45° clockwise until the marks align.

7.3. Adjust the valve clearances on the intake valves.

a) While holding the intake camshaft by the hexagonal section, loosen the bolt securing the timing pulley.

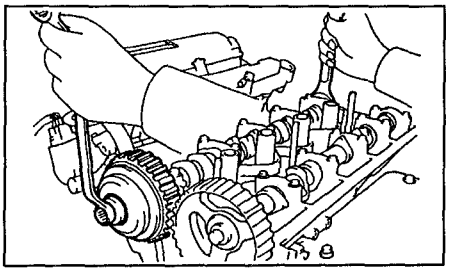

b) Remove the toothed pulley (together with the VVT mechanism assembly).
c) Remove the sealing ring. d) Unscrew the bolts securing the bearing caps and remove the caps. e) Remove the intake valve camshaft.

f) Remove the valve lifters and the adjusting shims. Adjusting shim

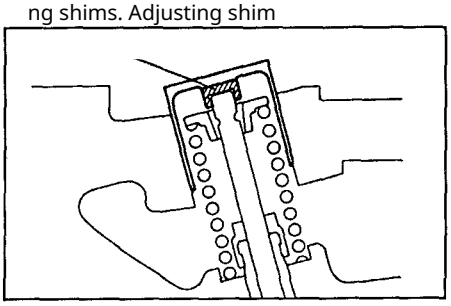

g) Using a dial indicator, measure the thickness of the adjusting shim.

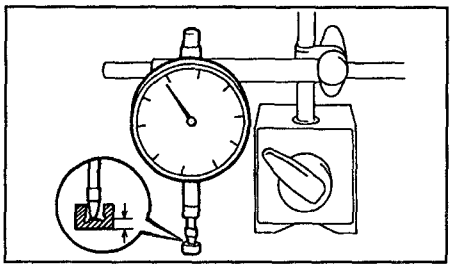

3) Calculate the thickness of the required shim: Thickness of new shim = Thickness of removed shim + (Measured clearance - Specified clearance) Note: adjustment shims (40 pieces) are manufactured in the following thickness values:

from 2.30 to 2.10 mm with a step of 0.02 mm from 2.10 to 1.90 mm with a step of 0.01 mm from 1.90 to 1.70 mm with a step of 0.02 mm i) Install the selected adjustment shims and valve lifters.

k) Apply engine oil to the bearing journals and the camshaft lobes.

l) Install the camshaft.

m) Install the bearing caps, starting with the first one, in accordance with the marks (see illustration).

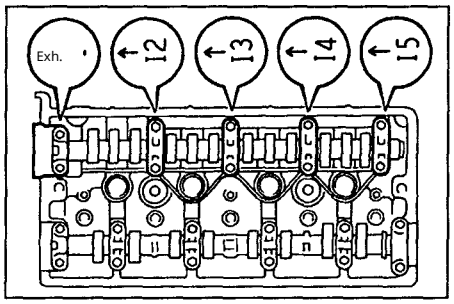

h) Evenly tighten the bolts securing the bearing caps (except the first one) in 3–4 passes (in the order 13-14-12-15).

Tightening torque.. ..... 18 N·m

j) Remove the front cover and clean the contact surfaces of the cover and the cylinder head with solvent—

—

k) Apply grease to the working edge of the oil seal and install the seal on the camshaft. Note:

- Install the seal with correct orientation.
- Press the seal in fully into the cylinder head bore.

l) Apply sealant to the contact surface of the front cover as shown in the illustration.

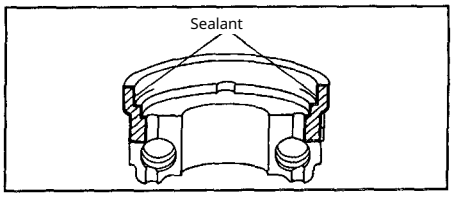

Install the front cover and tighten the mounting bolts in 3–4 passes motion.

Tightening torque.. .....18 H·M

Note:

- Install the front cover no later than five minutes after applying the sealant; otherw ise the sealant must be removed and fresh sealant applied.

- Do not start the engine for two hours a fter installing the cover.

c) Apply engine oil to the new sealing rin g and install the ring into the distributor groove of the camshaft.

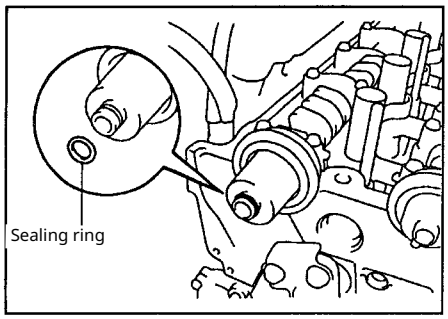

Carefully, so as not to damage the seali ng ring, install the toothed pulley (with the VVT mechanism assembled), alignin g the camshaft dowel pin with the hole i n the pulley.

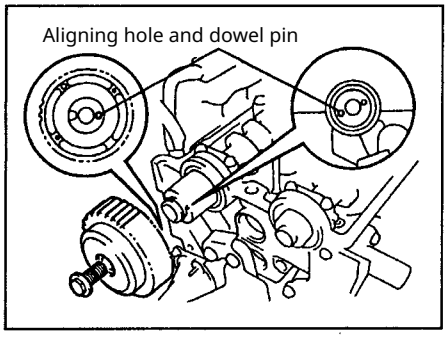

g) While holding the intake camshaft by t he hexagonal section, tighten the bolt sec uring the timing pulley. Tightening torqu e....

.....60 N·m

7.4. Adjustment of the valve clearances in the exhaust valves is performed in a similar manner, taking into account the following:

- Before unscrewing the bolt securing t he timing pulley, remove the distributo r.

- Hold the exhaust valve camshaft by the h exagonal section shown in the illustration.

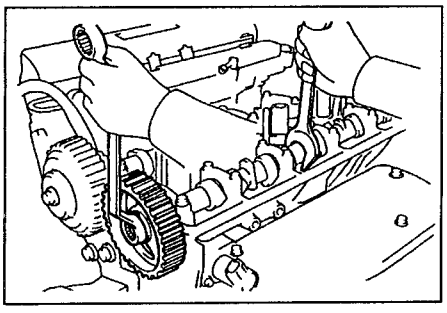

- Install the bearing caps and the timing belt starting from the first one according to the markings (se e illustration). Tighten the cap mou nting bolts in the order E3 - E4 - E2 - E5.

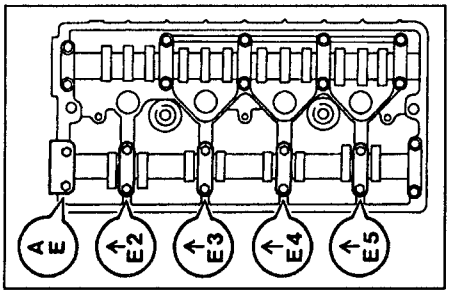

- Apply sealant to the mating surface of the front cover as shown above.

- After tightening the toothed p ulley mounting bolt, install the i gnition distributor and secure it.

7.5. Check the valve clearance. panakh.

7.6. Install the timing belt.

8. Install the cylinder head cover.

a) Clean the contact surface of the cylind er head and the cover. b) Apply sealant as shown in the illustration.

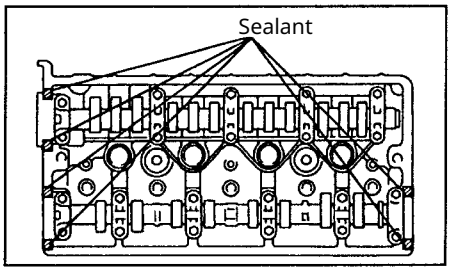

c) Install the cylinder head cover, washers and tighten the cap nuts.

Tightening torque 8 N·m·····

Note:

- Install the cover no later than five minutes af ter applying the sealant; otherwise the sealant must be removed and fresh sealant applied.

- Do not start the engine for two hours aft er installing the cover.

- Correctly orient the washers during installation (see illustration).

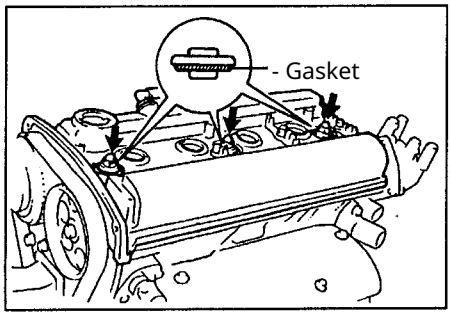

g) Connect the high-voltage wires to the spark plugs.

d) Install timing belt cover No. 3.

e) Install the washer fluid reservoir.

Attention: With the timing belt removed do not rotate the camshafts and cranksh aft to avoid collision between pistons an d valves. Before removing the camshafts , rotate the crankshaft 45° counterclockw ise (see illustration).

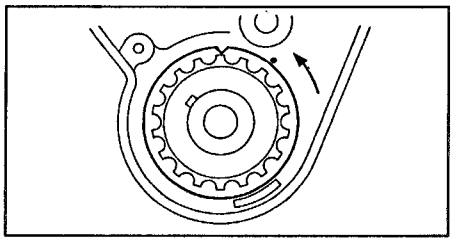

Before installing the timing belt, first align the marks on the camshaft pulleys and the cylinder head cover and then rotate the crankshaft 45° cloc kwise until the marks align. Removing the timing belt

1. Disconnect the cable from the negative te rminal of the battery.

2. Remove the washer reservoir. 3 . Remove the power steering fluid reservoir.

4. Remove the right-side engine splash shiel d gatela.

5. Set the piston of the first cylinder to TDC of the compression stroke.

Remove the oil filler cap and make sure yo u can see the notch on the camshaft.

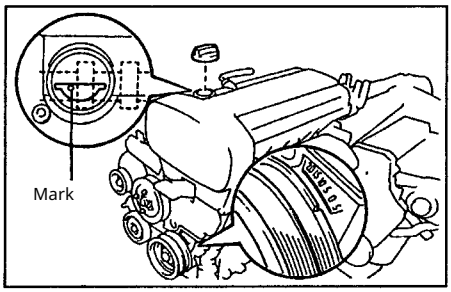

6. Remove the drive belt for the power steering pump and the air conditioner compressor.

7. Loosen the bolts securing the coolant pump pulley.

8. Remove the alternator drive belt. 9. Rem ove the coolant pump drive belt.

10. Remove the intermediate pulley pulley (or the alternator drive belt).

11. Remove the crankshaft pulley. a) Usi ng an appropriate tool, loosen the retaini ng bolt pulley.

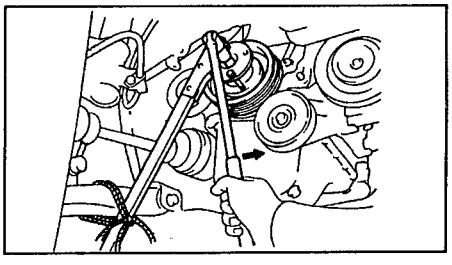

b) Using a puller, remove (press off) the crankshaft pulley.

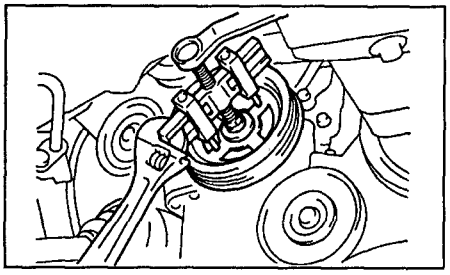

12. Remove the right engine mount. 13. Remove timing belt cover No. 3.

14. Remove timing belt drive cover No. 2.

15. Remove timing belt drive cover No. 1.

16. Remove the timing belt cover.

17. Remove the timing belt drive tensioner by unscrewing the two bolts.

18. Remove the timing belt. Attention: If the belt is to be reused, draw an arrow indicating the belt's running direction (toward the rotation of the engine crankshaft) and make marks on the belt and pulleys as shown in the illustration.

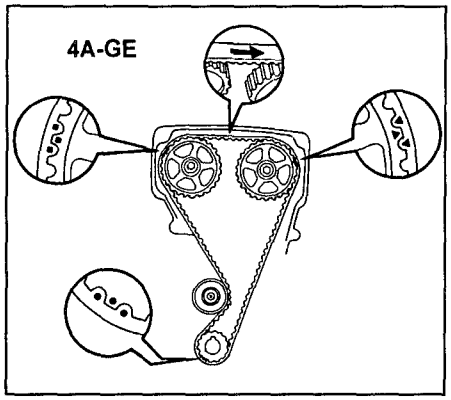

a) Unscrew the nuts (bolts) and remove the timing belt tensioner. b) Remove the timing belt. Attention: With the timing belt removed, do not rotate the camshafts or the crankshaft to avoid piston-to-valve contact. 19. Remove cover No. 2 of the cylinder head.

20. If necessary, remove the crankshaft timing pulley. If difficulties arise, use two screwdrivers. Warning: to prevent damage to the cylinder block components, place cloth underneath as shown in the illustration.

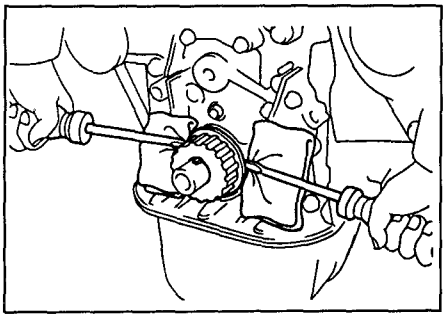

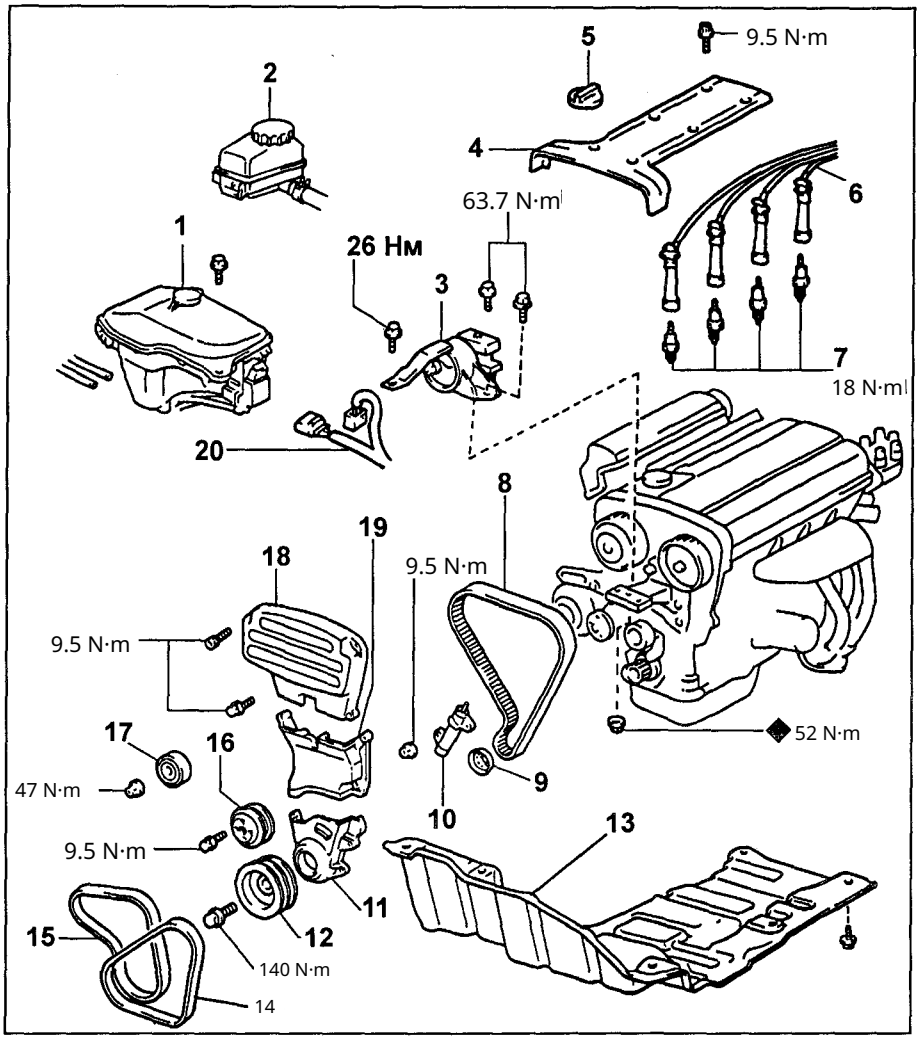

Removal and installation of the timing belt (4A-GE). 1 - washer reservoir, 2 - power steering reservoir, 3 - right engine mount, 4 - cylinder head cover No. 2, 5 - oil filler cap cover, 6 - high-voltage wires, 7 - spark plugs, 8 - timing belt, 9 - timing belt guide, 10 - timing belt tensioner, 11 - timing belt cover No. 1, 12 - crankshaft pulley, 13 - right engine shield section, 14 - air conditioning compressor and power steering pump drive belt, 15 - alternator and water pump drive belt, 16 - water pump pulley, 17 - alternator and water pump drive belt tensioner pulley, 18 - timing belt cover No. 3, 19 - timing belt cover No. 2, 20 - washer pump connectors.

Timing belt installation Note: do not allow water or oil to get on the timing pulleys of the camshaft and crankshaft and keep them clean clean.

1. Install the crankshaft timing pulley (if it was removed).
a) Align the key on the crankshaft with the keyway of the timing gear.

6) Fit the pulley onto the crankshaft snout fully, with the flange facing inward.

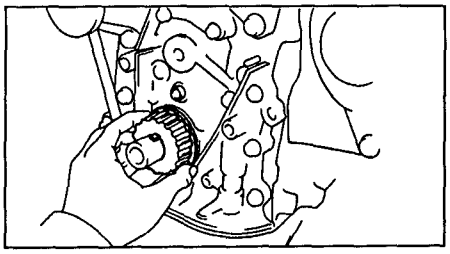

2. Install the timing belt. a) Ensure the alignment of the marks on the cylinder head cover and the camshaft pulleys.

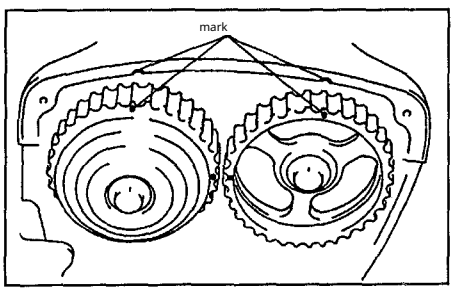

b) Ensure the alignment of the marks on the crankshaft timing pulley and on the oil pump housing. Caution: if reusing the belt, align the marks previously made on the pulleys and the belt, and observe the belt's direction of rotation.

c) Install the timing belt. d) Ensure th at 12 belt teeth are located between t he marks on the camshaft pulleys. e) Using a vise or press, compress the tensioner until the holes in the ro d and the cylinder walls align. Compre ss gradually; the load on the rod must not exceed 9.8 kN (1000 kg). Note: if t he hole in the rod and the cylinder are not aligned, rotate the r od during pressing to align the holes.

f) Using a hex socket wrench, lock t he rod in place. g) Install the tensioner and secure it with nuts (b olts) (M3, 9.5 N·m).

3) Remove the socket wrench that secures t he locking pin.

i) Ensure there is tension in the worki ng branch of the timing belt.

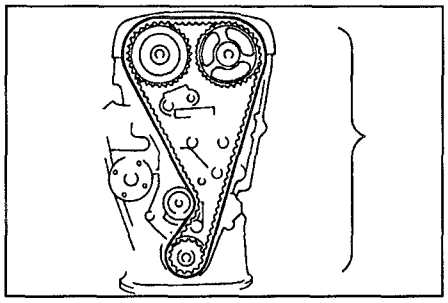

3. Check the correct installation of the timing belt (valve timing).

a) Slowly turn the crankshaft cloc kwise 2 revolutions from TDC to TDC, first installing the timing ge ar retaining bolt crankshaft pulley.

b) make sure that the timing marks on each pulley align with the corresponding marks.

4. Install the timing belt guide with the fla nged edge facing outward, as shown in t he illustration.

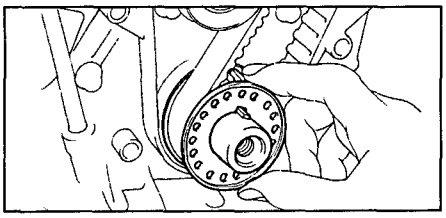

5. Install timing belt protective covers No. 1, No. 2, and No. 3. Disconnect all wiring co nnectors and remove the wiring harness.

Note: The lengths of the bolts for timing belt protective covers No. 1, No. 2, and No. 3 differ; their values in mm are shown in the illustrations.

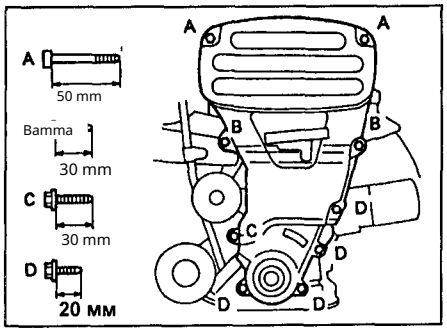

6. Install the right engine mount. 7. Install the crankshaft pulley. a) Align the key on the cra nkshaft with the pulley groove and slide the pulley onto the shaft.

b) Using a suitable tool, screw in and t ighten the crankshaft pulley mounting bolt. 8. Install the spark plugs an d connect the high-tension wires.

. Remove the intake camshaft and the intake camshaft bearing support. 9. Install the coolant pump pulley.

10. Install the generator drive belt.

11. Install the power steering pump and air conditioner compressor drive belt. 1 2. Install the right side of the engin e protection.

13. Install the power steering fluid reservoir

14. Install the washer fluid reservoir. 15. Connect the wire to the battery ter minal. "-"

Cylinder head

cylinders

Removal of the cylinder head

cylinder block

1. Relieve the fuel pressure in the fuel rail.

2. Remove the timing belt (see the "Ti ming Belt" section). 3. Remove the coolant pump.

4. Disconnect the accelerator cable. 5. (Automatic transmission) Disconnect the thr ottle valve control cable. 6. Remove the air duct.

7. Disconnect the radiator inlet hose.

8. Disconnect the radiator outlet h ose.

9. Disconnect the heater hoses.

10. Disconnect the fuel supply hose.

11. Disconnect the fuel return hose.

12. Disconnect the vacuum hose to the brake booster.

13. Remove the intake air chamber.
(a) Unscrew the five bolts and remove the intake chamber cover.
(b) Disconnect the hoses.
(c) Disconnect the air pipes and remove the intake air chamber.

14. Unscrew the mounting nuts of the guard

15. Remove the intake chamber supports.

16. Remove the cylinder head cover.

17. With the timing belt removed, do n ot rotate the camshafts or the crankshaf t to avoid piston-to-valve contact. Befor e removing the camshafts, rotate the cr ank- shaft 45° counterclockwise (see illu stration).

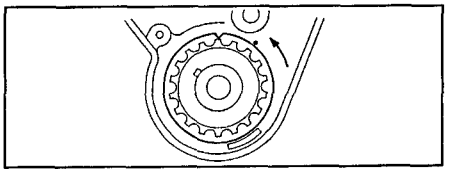

18. Holding the camshafts by their hexag onal part, unscrew the mounting bolts of the toothed pulleys and remove the toot hed pulleys of the exhaust camshafts and intake camshafts with the VVT mechanis m assembly. 19. Remove the timing belt cover No. 4.

20. Remove the right engine mount, tension 21

22. Disconnect the exhaust system's intake pipe.

23. Remove the cylinder head. a) Using a special tool, unscrew the cylinder h ead mounting bolts in the order sho wn in the illustration (first loosen the m in 2–3 passes).

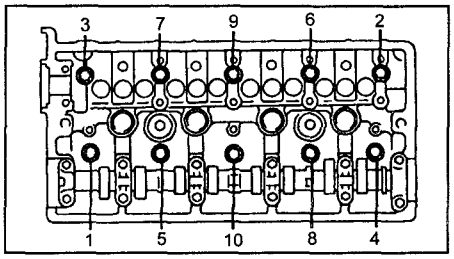

6) Remove the cylinder head assembly and the gasket.

24. Remove the exhaust camshaft.

25. Remove the intake and exhaust manifolds.

Installation of the cylind er head

1. Before installation, measure th e length of the cylinder head bolt s.

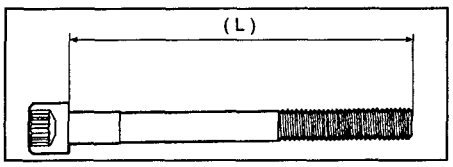

The maximum allowable length.....116.5 mm.....
If the bolt length exceeds the maximum allowable value, replace it.

2. Install the cylinder head. a) Install a new gasket. b) Install the cylinder head.

c) Apply a thin layer of engine oil to the threads and under the bolt heads.

d) Pre-tighten the mounting bolts in the sequence shown in the illustration, in several passes (at least three), to a torque of 30 N·m.

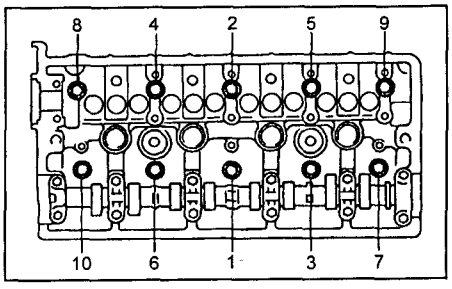

e) Mark the edge of the bolt facing the front of the engine (toward the crankshaft pulley) with paint, as shown in the illustration. f) Tighten all bolts in the above sequence by turning them 90°.

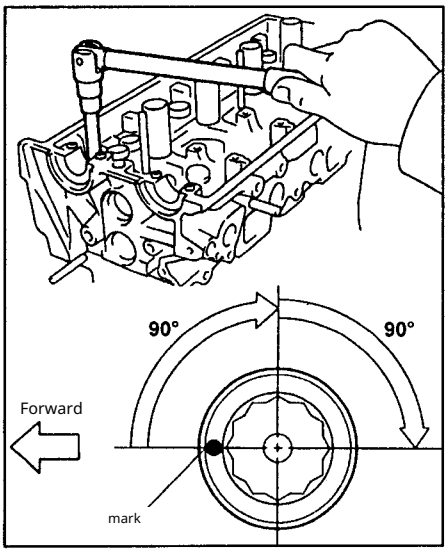

g) Re-tighten all bolts again by 90° in the sequence indicated above.

3) Make sure all bolt marks are oriented 180° from their initial positions and facing the rear of the engine (toward the power take-off).

3. Install the intake and exhaust manifolds.

4. Install the camshaft of the exhaust valves.
5. Connect the exhaust system's intake pipe.
6. Install the camshaft bearing support and the intake valve camshaft.

7. Install the right engine mount. 8. Install timing belt cover No. 4.

9. Install the timing pulleys of the camshafts of the exhaust valves and the intake valves together with the assembled VT mechanism. While holding the camshafts by the hexagonal section, tighten the bolts securing the timing pulleys.

Tightening torque.....60 N·m 10. Install the cylinder head cover 11. Install the intake air chamber stays.

12. Install the wiring harness, connect all connectors, and tighten the nuts securing the wiring harness protector. 13. Install the intake air chamber. a) Install the intake air chamber and connect the air hoses. b) Install the pipes.

c) Install the intake air chamber cover and tighten the five bolts. 14. Connect the vacuum hoses. 15. Connect the return hose of the fuel hose.

16. Connect the inlet fuel hose to the manifold.

17. Connect the heater hoses. 18. Connect the radiator outlet hose.

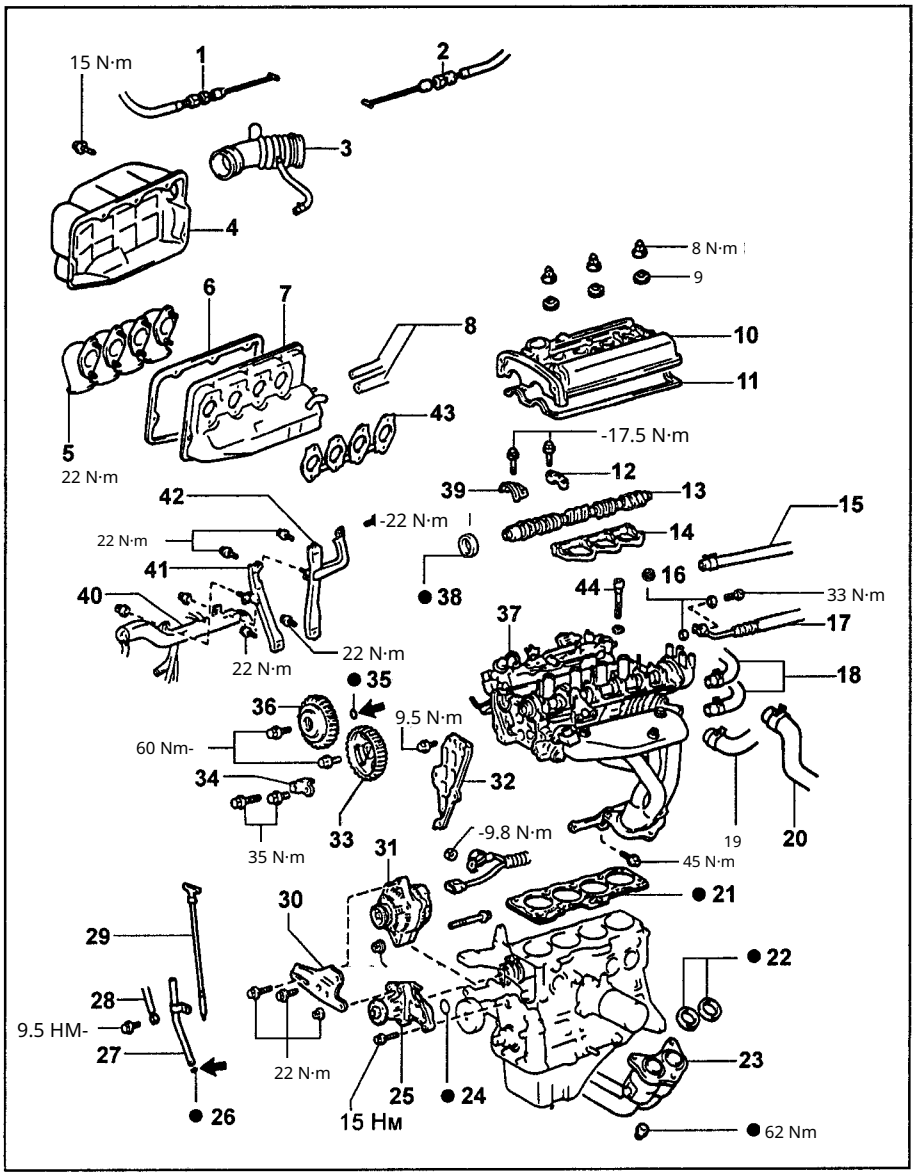

Cylinder head (4A-GE). 1 - accelerator cable, 2 - throttle control cable (automatic transmission), 3 - air duct, 4 - air intake chamber cover, 5 - hoses, 6, 11, 43 - gaskets, 7 - air intake chamber, 8 - vacuum hoses, 9 - sealing washer, 10 - cylinder head cover, 12 - intake camshaft bearing caps, 13 - intake camshaft, 14 - lower bearing support of the intake camshaft, 15 - fuel return hose, 16, 24, 26, 35 - O-rings, 17 - inlet fuel hose, 18 - heater hoses, 19 - radiator inlet hose, 20 - radiator outlet hose, 21 - cylinder head gasket, 22 - gaskets, 23 - coolant pump inlet pipe, 27 - oil guide, 25 - oil dipstick tube, 28 - ground wire, 29 - oil dipstick, 30 - alternator bracket, 31 - alternator, 32 - timing belt cover No. 4, 33 - toothed pulley of the exhaust camshaft, 34 - lifting hook (eye), 36 - toothed pulley of the intake camshaft with VVT mechanism assembly, 37 - cylinder head with intake and exhaust manifoldsassembly, 38 - oil seal, 39 - front bearing cap of the intake camshaft, 40 - engine wiring harness, 41 - stand No. 2, 42 - stand No. 1, 43 - cylinder head mounting bolt gasket, 44 - cylinder head.

19. Connect the intake hose to the radiator.
20. Install the air duct.

21. (Automatic transmission) Connect the control cable to the throttle control cable. 22. Connect the accelerator cable. 23. Install the coolant pump.

24. Install the timing belt.

Engine block

Preparatory operations before disassembly

1. Remove the flywheel or drive plate drain the torque converter (see the chapter section "Engine block", "Engines 4A-FE and 7A-FE"). 2. Remove the rear plate (cover) of the engine block by unscrewing 2 bolts.

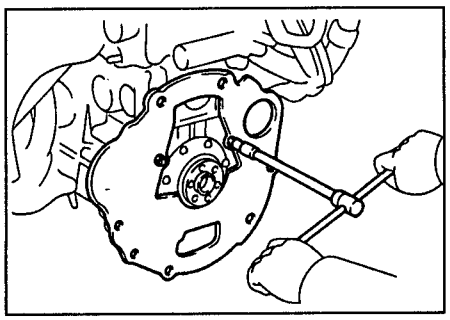

3. Mount the engine on a teardown stand.

4. Remove the air conditioning compressor. 5. Remove the timing drive belt (see the "Timing Drive Belt" section).

6. Remove the cylinder head (see the "Cylinder Head" section).

7. Remove the alternator and the tensioning bracket.

8. Remove the coolant pump.

10. Remove the oil filter.

11. Remove the coolant drain plug.

12. Using a suitable tool, remove the oil pressure warning sensor.

14. Using a suitable tool, remove the knock (detonation) sensor. 15. Remove the oil pan (see the "Lubrication System" chapter).

16. Remove the oil pump (see the "Lubrication System" chapter).

Final assembly

1. Install the oil pump (see the "Lubrication System" chapter).

2. Install the oil pan (see the chapter "Lubrication System").

3. Install the knock sensor. 4. Install the emergency oil pressure sensor.

5. Install the coolant drain plug.

6. Install the oil filter. 7. Install the coolant pump.

8. Install the alternator.

9. Install the cylinder head. 10. Install the timing belt. 11. Install the air conditioning compressor.

12. Remove the engine from the stand.

13. Install the engine rear plate gatela.

14. Install the flywheel or the drive plate of the torque converter (see the "Cylinder Block" section in the "Engines 4A-FE and 7A-FE" chapters).

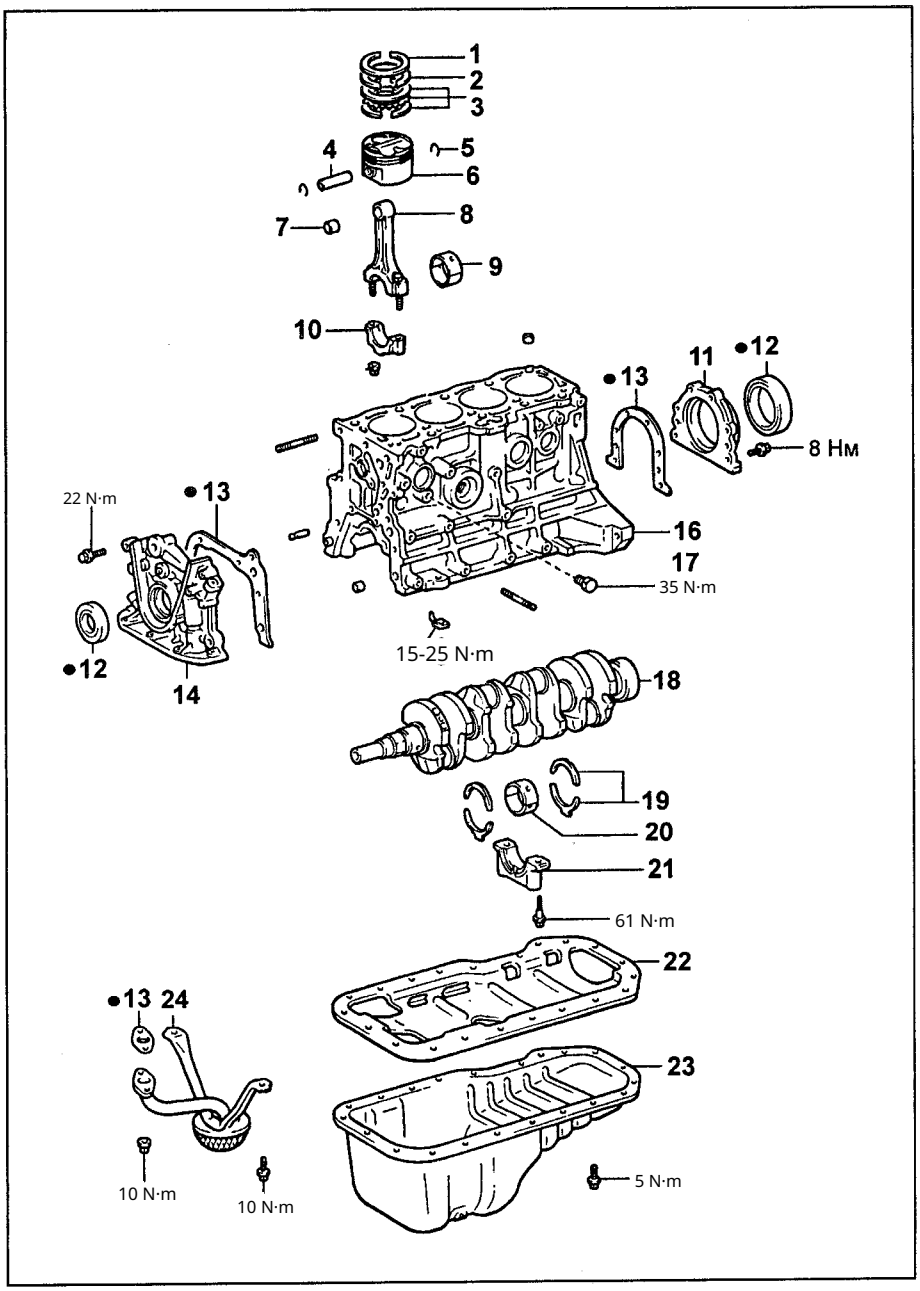

Cylinder block (4A-GE). 1 Upper compression ring, 2 Lower compression ring, 3 Oil control rings with expander, 4 Piston pin, 5 Circlip, 6 Piston, 7 Upper small-end bush, 8 Connecting rod, 9 Connecting-rod bearing shell, 10 Connecting-rod cap, 11 Oil pump cover, 12 Oil pump assembly, 13 Gasket, 14 Oil pump cover, 15 Oil nozzle assembly, 16 Cylinder block, 17 Coolant drain plug, 18 Crankshaft, 19 Thrust half rings, 20 Main bearing shell, 21 Main bearing cap, 22 Oil baffle, 23 Oil pan, 24 Oil pickup.

21 -

Engine - general repair procedures

Cylinder head

Disassembly of the head cylinder block

1. Remove the tappets and the shim shims.

Note: arrange the tappets

ers and adjusting shims in sequence, be careful to avoid getting them in your eyes during their installation.

2. Remove the valves.

a) Using a suitable tool, compress the valv e spring and remove the two keepers.

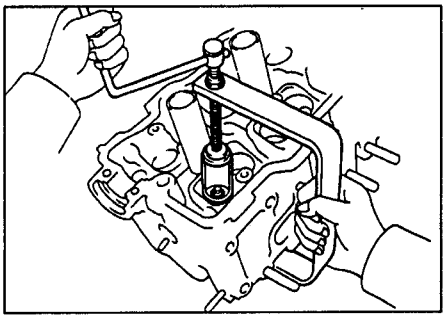

b) Remove the spring retainer, valve spri ng, valve, and spring seat. Note: arrang e the valves, valve springs, spring seats, an d spring retainers in reverse order.

activities.

c) Using long-nosed pliers, remove th e oil seal

caps.

Note: be careful not to nick the cylinder wall with the tappet, as a single scratch will preven t the tappet from seating properly or

The lifter/plunger will start to stick.

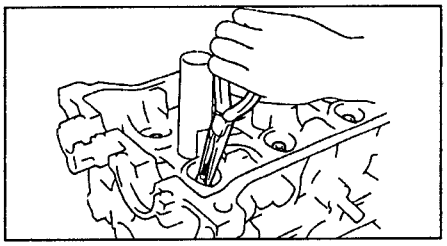

Inspection, cleaning, and repair of cylinder head components

1. Clean the piston crowns and the surface of the cylinder block that mates with the cy linder head.

a) While rotating the crankshaft, seque ntially bring the pistons to TDC. Use a s craper to clean the surfaces of the pisto n crowns from carbon deposits.

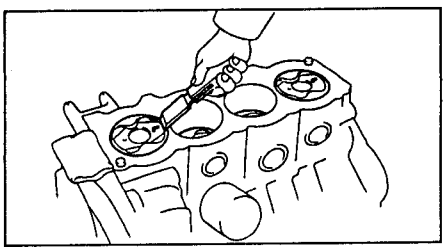

b) Use a scraper to remove the remainin g pieces of the head gasket from the surf ace of the cylinder block mating ar ea. ranslation> <translation>c) Use comp ressed air to remove carbon deposits an d remaining head gasket material from t he surfaces of the bolt holes.

Note: when using compressed spring-

particles or dirt.

2. Clean the cylinder head. a) Clean the cyl inder head surface of any remaining hea d gasket material.

Note: be careful not to damage the head s urface that mates with the gasket.

b) Clean the combustion chamber surface s of the cylinder head with a wire brush to remove remaining carbon deposits.

c) Clean the guide bore holes of the cylin der head with a brush and solvent.

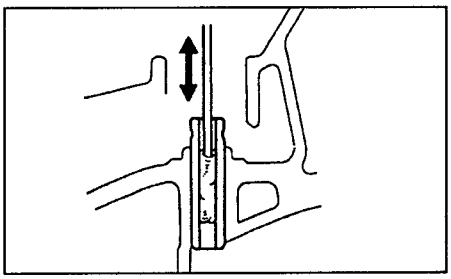

g) Clean the surface of the cylinder hea d (the surface mating with the cylinder block), using a soft brush and a solvent .

3. Inspect the cylinder head. a) Using a pr ecision straightedge and a flat feeler ga uge, as shown in the illustration, check t he warpage of the mating working surfa ces of the cylinder head:

- with the cylinder block surface.
- with the surfaces of the intake and exhaust manifolds.

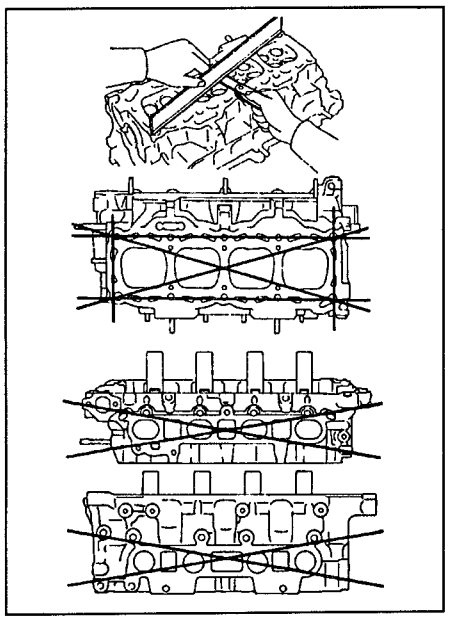

Maximum allowable surface flatness deviation:

gas junction:

4A-FE, 7A-FE. ..... 0.05 mm
4A-GE.. ..... 0.10 mm
adjacent
collectors ..... 0.10 mm

If the amount of warpage exceeds the maxi mum allowable, replace the cylinder head o r resurface it.

b) Using a penetrating dye, inspect for c racks in the combustion chambers, inta ke and exhaust ports, and on the surfac e of the gas joint. If cracks are found, re place the cylinder head or weld it (follow ed by grinding).

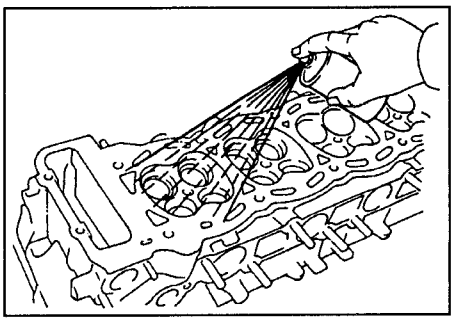

4. Clean the valves.

a) Use a scraper to remove the carbo naceous deposits from the valve fa ce. b) Finish cleaning with a brush

valve.

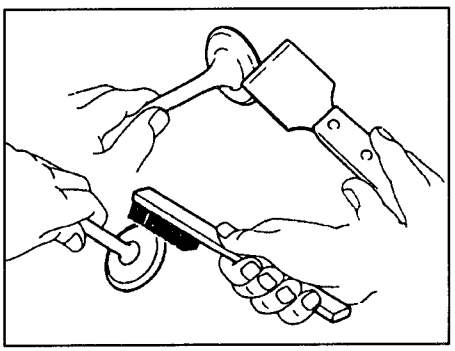

5. Check the diameters of the valve stems a valves nd the inner diameters of the valve guide bushings.

a) Measure the inner diameter of the valve gu ide bushings with a bore gauge.

Inner diameter of the bushing:

4A-FE, 7A-FE. ..... 6.010 - 6.030 mm
4A-GE ..... 5.010 - 5.030 mm

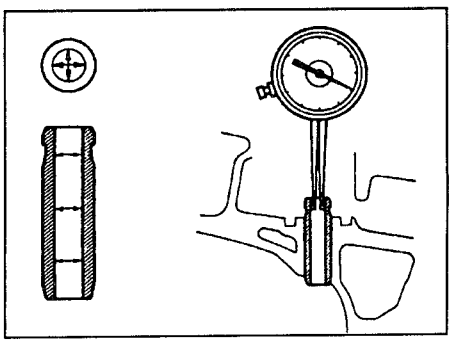

b) Measure the diameter of the valve stem with a micrometer.

Valve stem diameter:
intake valve
4A-FE, 7A-FE.. .....5,970 - 5,985 mm
4A-GE. .....4,970- 4,985 mm
exhaust valve
4A-FE, 7A-FE. .....5,965 - 5,980 mm
4A-GE. .....4,965 - 4,980 mm

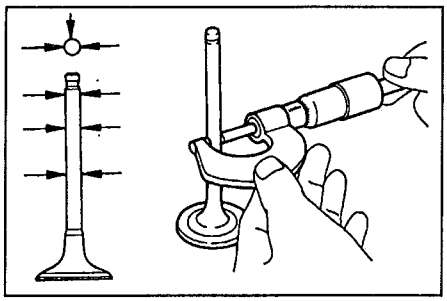

c) From the difference between the valve stem diameter and the inner diameter of the guide sleeve, find the clearance between the valve stem and its guide. Nominal oil clearance:

intake valve.....0.025 - 0.060 mm exhaust valve .... 0.030 - 0.065 mm Maximum oil clearance: intake valve..... 0.08 mm exhaust valve .0.10 mm If the clearance exceeds the maximum allowable, replace the valve and the guide sleeve.

6. If necessary, replace the valve guide sleeves.

a) Gradually heat the cylinder head in a water bath to a temperature of 80–100°C.
b) Using a drift and a hammer, press out the guide sleeve.

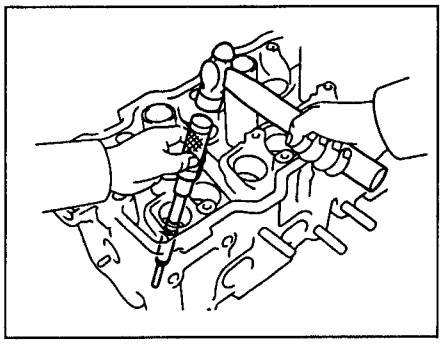

c) Using an inside micrometer, measure the diameter of the bore for the guide bushing in the cylinder head housing.

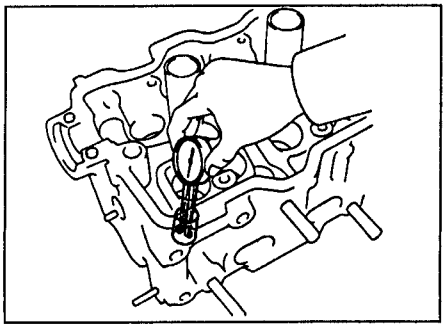

Nominal hole diameter:
4A-FE, 7A-FE..... 11,000 - 11,027 MM
4A-GE 9,679 - 9,701 mm

If the diameter of the bore for the guide in the cylinder head casting is larger than nominal, bore the guide bore to the repair diameter: 4A-FE, 7A-FE..... 11.050 - 11.077 mm 4A-GE..... 9.729 - 9.751 mm Then select a new size (standard or repaired at +0.05 mm) for the outer diameter of the guide sleeve.

If the bore diameter for the guide in the cylinder head casting exceeds the repair size, replace the cylinder head. Note: on the 4A-GE engine, the intake and exhaust valve guide sleeves have different sizes.

Guide sleeves:
for intake valves. ..... 38.5 mm
for exhaust valves..... 45.5 mm

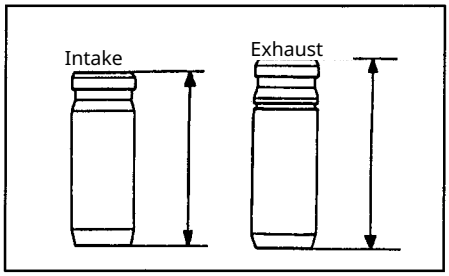

c) Heat the cylinder head in a water bath to a temperature of 80–100°C.

d) Install the valve guide. Using a drift and a hammer, install a new valve guide so that it protrudes from the cylinder head by:

4A-FE, 7A-FE..... 12.7 - 13.1 mm
4A-GE..... 8.2 - 8.6 mm

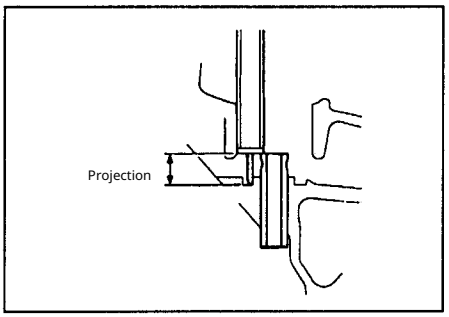

e) Using a 6 mm reamer, ream the inner bore of the guide to provide the nominal clearance between the guide and the valve stem (see item 5 in b).

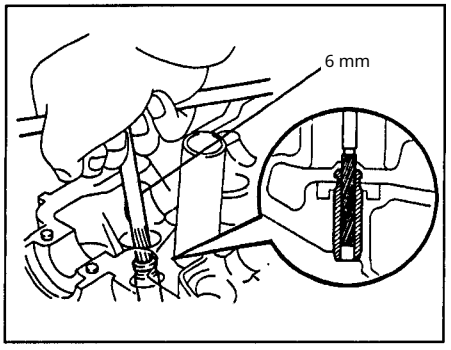

7. Check and lap the valves. (a) Grind the valves until traces of carbon deposits and scratches are removed. (b) Make sure that the lapped valve seating bevel forms an angle of 44.5° relative to the plane perpendicular to the stem axis.

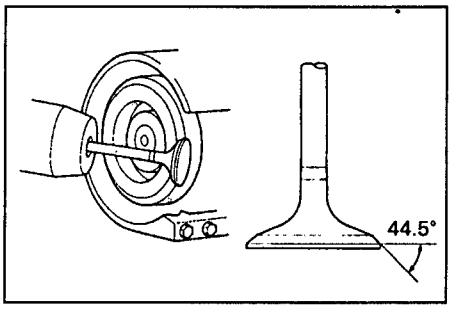

(c) Check the overall length of the valve.

Nominal length:
Intake valve:
4A-FE, 7A-FE..... 87.45 mm
4A-GE..... 98.51 mm
Exhaust valve:
4A-FE, 7A-FE..... 87.84 mm
4A-GE..... 108.45 mm

Minimum overall length:
Intake valve:
4A-FE, 7A-FE. ..... 86.95 mm
4A-GE. ..... 97.81 mm
Exhaust valve:
4A-FE, 7A-FE..... 87.35 mm
4A-GE..... 107.75 mm

If the total length is less than the minimum allowable value, replace the valve.

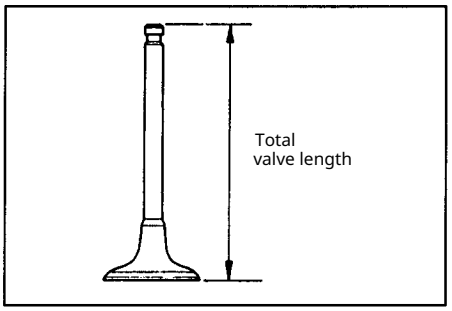

d) Inspect the valve seating face for signs of wear.

If the valve face is worn, refinish the face or replace the valve. Note: when refinishing, do not allow the valve's total length to be reduced below its minimum allowable value. 8. Check and clean the valve seats.

a) Using a carbide cutter with a 45° cone angle, grind the valve seats, removing only the minimum layer of metal necessary to clean the working seating surfaces of the seats.

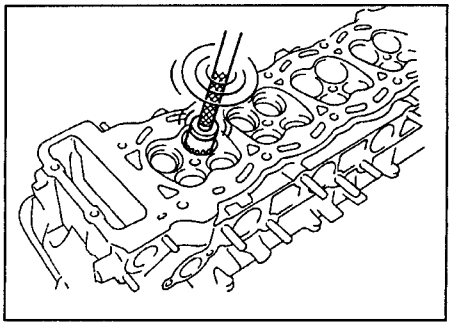

b) Check the correct seating of the valve in t he seat.

- Apply a thin layer of valve grinding compo und to the valve face. Press the working face of the valve against the seat, but do not rota te the valve. Then remove the valve and insp ect the seat and the valve face.

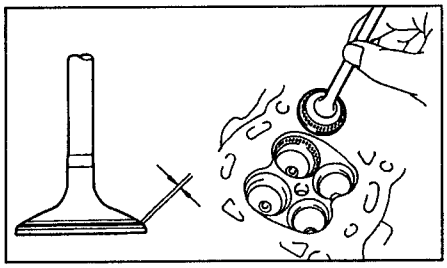

- If the paint remains around the entire circ umference (360°) of the valve face, the valve is concentric. Otherwise, replace the valve. Otherwise, replace the valve.
- If the paint appears around the e ntire circumference (360°) of the val ve seat, the valve guide (bushing) an d the valve seat are concentric. Othe rwise, regrind the valve face.
- Make sure that the contact mark is l ocated in the middle of the valve wor king face and has a width of 1.0 - 1. 4 mm. If not, correct the seat face by r egrinding it using cutters with cone an gles of 30° and 60°.

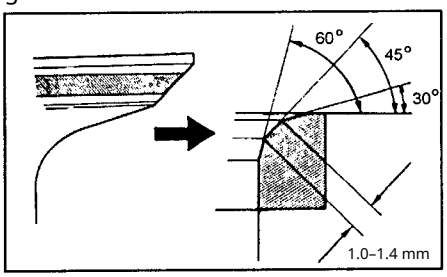

c) Manually lap the valve and the valv e seat using an abrasive paste.

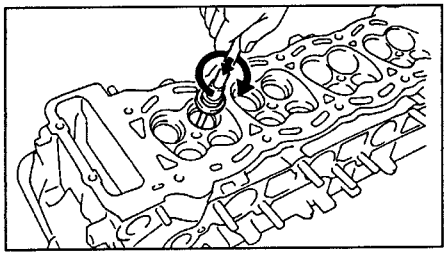

g) After lapping, clean the valve and the v alve seat.

9. Check the valve springs. (a) Using a metal square (90°), check the non-perp endicularity of the valve spring as show n in the illustration.

The maximum allowable non-perpendi cularity is.....2.0 mm

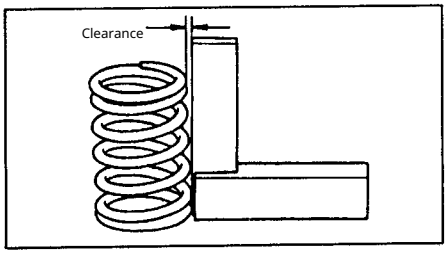

b) Measure the free length of the spring in its free state with a caliper. B. Check the dimension s of the camshaft bearing journals by measuring their diameters with a micrometer.

in the free state:

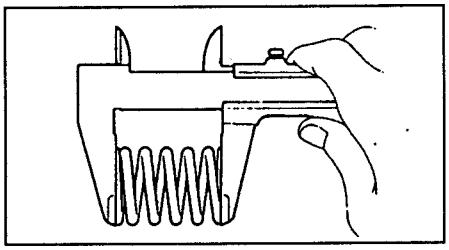

Valve spring length:

4A-FE, 7A-FE.. ..... 38.57 mm
4A-GE. ..... 47.60 mm

If the length of the spring differs from the nominal, replace the valve spring.

10. Check the camshafts

shafts and bearings.

A. Check the camshaft for any bending.

a) Lay the camshaft on V-blocks.

b) Using a dial indicator, check the ru nout of the camshaft relative to the j ournal center. Maximum runout..... ..... 0.04 mm

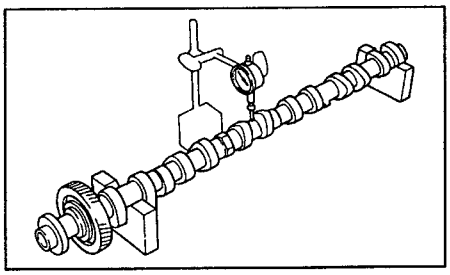

If the runout exceeds the permissible value, r eplace the camshaft.

B. Check the cam lobe height of the ca mshaft by measuring it with a microm eter.

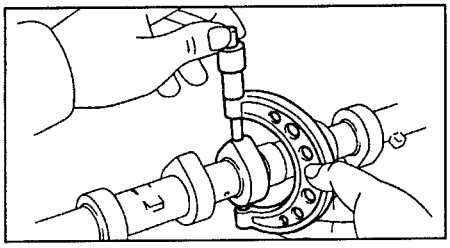

4A-FE, 7A-FE:

Height of the cam lobes of the intake camshaft:

nominal ..... 41.91 - 42.01 mm
minimum. ..... 41.50 mm

Height of the cam lobes of the exhaust cams haft:

nominal ..... 41.96 - 42.06 mm
minimum. ..... 41.55 mm

4A-GE:

Intake valve camshaft lobe height: nominal 40. 28 - 40.38 mm 40.28 - 40.38 mm mini mum 40.13 mm Exhaust valve camshaft lobe height: nominal 40. 09 - 40.19 mm minimum 39.94 mm If the lob e height is less than the minimum, replace the camshaft ....

crankshaft

Measure the diameters with a micrometer.

Diameter of the camshaft bearing journals of the camshafts:

4A-FE, 7A-FE:

1st support. ..... 24.949 - 24.965 mm
the rest ..... 22.949 - 22.965 mm
4A-GE..... .26.949 - 26.965 mm

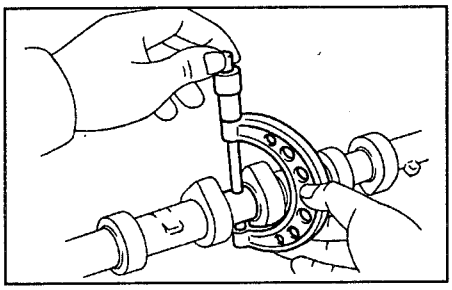

If the journal diameters exceed the limit s specified in the technical specifications, check the oil clearance between the jou rnal and the bearing. C. Ins pect the camshaft bearings for pitting a nd scratches on their surfaces. If any of t he listed defects are present, replace the bearing caps or the cylinder head asse mbly.

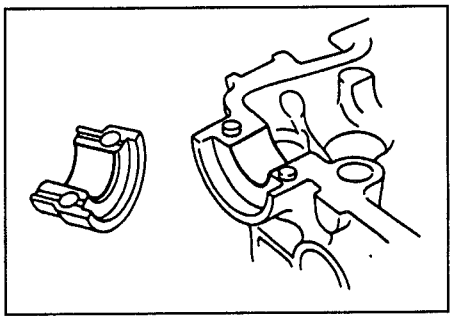

D. (4A-FE, 7A-FE) Check the condition of t he split leaf spring of the camshaft gear by measuring the clearance of its lock in the free

state.

Free clearance ..... 17.0–17.6 mm

If the lock clearance in the free state is outside t he specified limits, replace the gear's leaf spring .

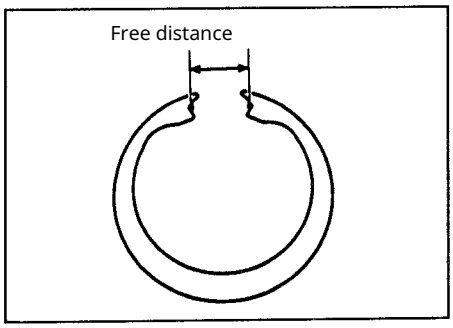

E. Check the radial oil clearance B in the c amshaft bearings

auxiliary camshaft.

a) Clean the working surfaces of the cams haft journals and the bearing caps.

b) Place the camshafts in the cylinder head bearing seats.

c) Place a piece of plastic go caliber for each journal of the cams haft.

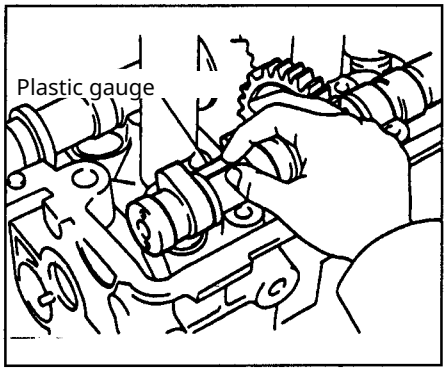

Note: The arrows on the bearing caps mu st be pointed toward the front of the engi ne.

c) Install the bearing caps. Tighte n the cap bolts as shown in the "C ylinder Head" section of the chap ter for the corresponding engine.

to the corresponding eng ine. Note: Do not rotate the camshaft.

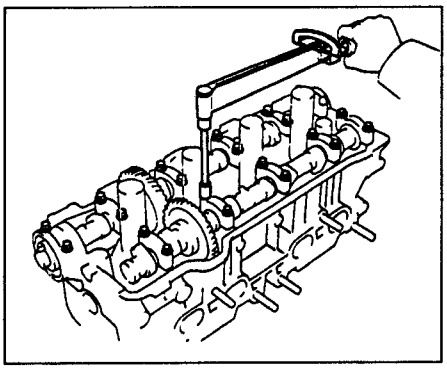

d) Remove the bearing caps. e) Mea sure the width of the flattened plastic g auges at their widest point and calculat e the clearance. Radial clearance in t he camshaft bearings: Standard 0.035 - 0. 072 mm Maximum allowable 0.1 mm .....

If the clearance is greater than the ma ximum allowable, replace the camshaf t. If necessary, replace the bearing cap s and the cylinder head.

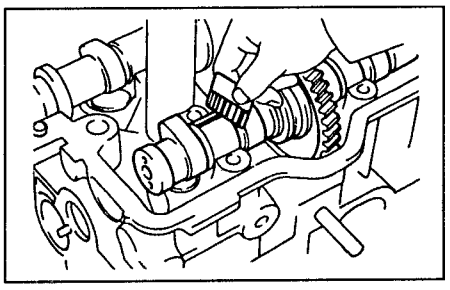

g) Remove the remaining pieces of plastic c alipers.

Zh. Check the camshaft end play of the camshaft.

a) Install the camshaft in the cylinder he ad bearing. b) Using a dial indicator, measure the end play by moving the ca mshafts back and forth.

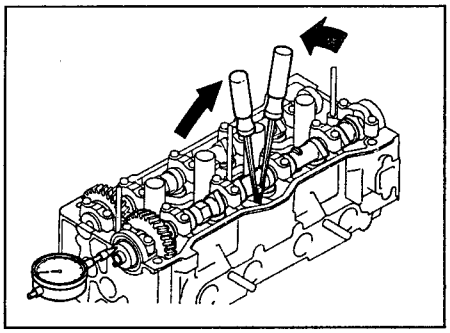

Axial clearance of the camshafts:

4A-FE, 7A-FE:

Standard:

intake valve camshaft ..... 0.030 - 0.085 mm

exhaust valve shaft. ..... 0.035 - 0.090 mm

Maximum allowable..... 0.11 mm

4A-GE:

Standard..0.08-0.19 mm Maximum all owable ..... 0.25 mm If the axial clear ance is greater than the maximum allowable, replace the camshaft. If necessary, replace the bearing caps and the cylinder head. 3. Measure t he backlash in the camsha ft gear mesh.

a) Install both camshafts into the cylinder hea d without installing the auxiliary drive gear of the exhaust camshaft.

b) Using a dial indicator, measure the b acklash in the gear mesh. Stand ard backlash ..... 0.02 - 0.20 mm Maximu m backlash.. 0.30 mm If ..... the bac klash is greater than the maximum, rep lace the camshafts.

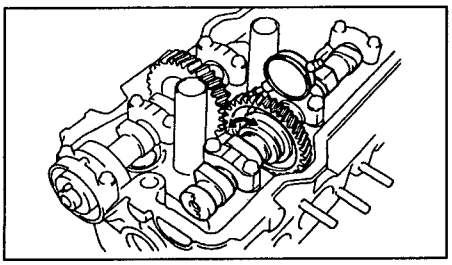

11. Inspect the tappets and the tappet bo res in the cylinder head body. a) Using an inside micrometer indicator mea- sure the diameters of the tappet bores in t he cylinder head. Tappet bore diameter in the cylinder head:

4A-FE, 7A-FE..... 31,000 - 31,025 mm
4A-GE..... 23,500 - 23,521 mm

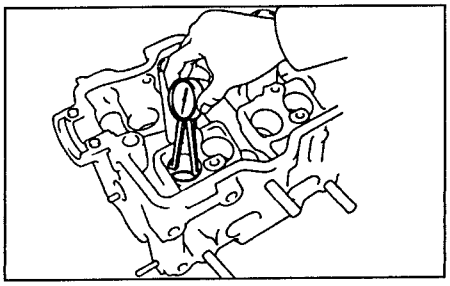

b) Measure the diameter with a micrometer the follower.

Pushrod diameter:

4A-FE, 7A-FE. ..... 30,966 - 30,976 mm

4A-GE ..... 23,475 - 23,485 mm

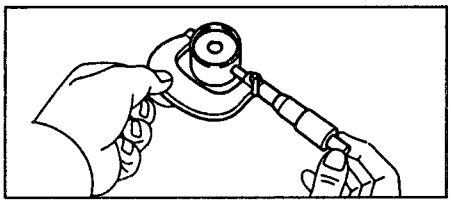

c) Check the oil clearance. Subtract the plung er diameter value from the diameter of the b ore for the plunger in the cylinder head body and determine the clearance.

Clearance between the plunger and the wall of the plunger bore:

Nominal:

4A-FE, 7A-FE. .....0.024 - 0.059 mm

4A-GE .....0.015 - 0.046 mm

Maximum:

4A-FE, 7A-FE. ..... 0.07 mm

4A-GE ..... 0.10 mm

If the clearance exceeds the maxim um allowable value, replace the plu nger. If necessary, replace the cylin der head.

Assembly of the cy linder head Note:

- Completely clean all parts that will be ins talled.
- Before installing rotating and/or sliding parts, lubricate their working surfaces wit h fresh engine oil.
- Replace all gaskets, seals, and oil-control rings with new ones. caps

1. Install protective tubes for the spark plugs.

Caution: When using a new cylinder head , the spark plug protective tubes must be installed beforehand.

a) Mark the tube to indicate the normal pro trusion of the tube from the cylinder head. Protrusion values: 4A-FE, 7A-FE. 4A-GE.

..... 46.8 - 47.6 mm
..... 33.1 - 33.9 mm

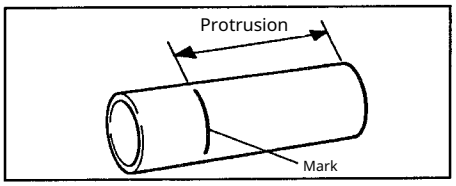

b) Apply adhesive to the surface of the hole for installing the spark plug tube of the spark plug.

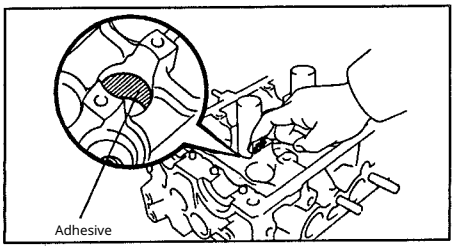

Adhesive: Adhesive 1324, Three Bond 1324 or equivalent.

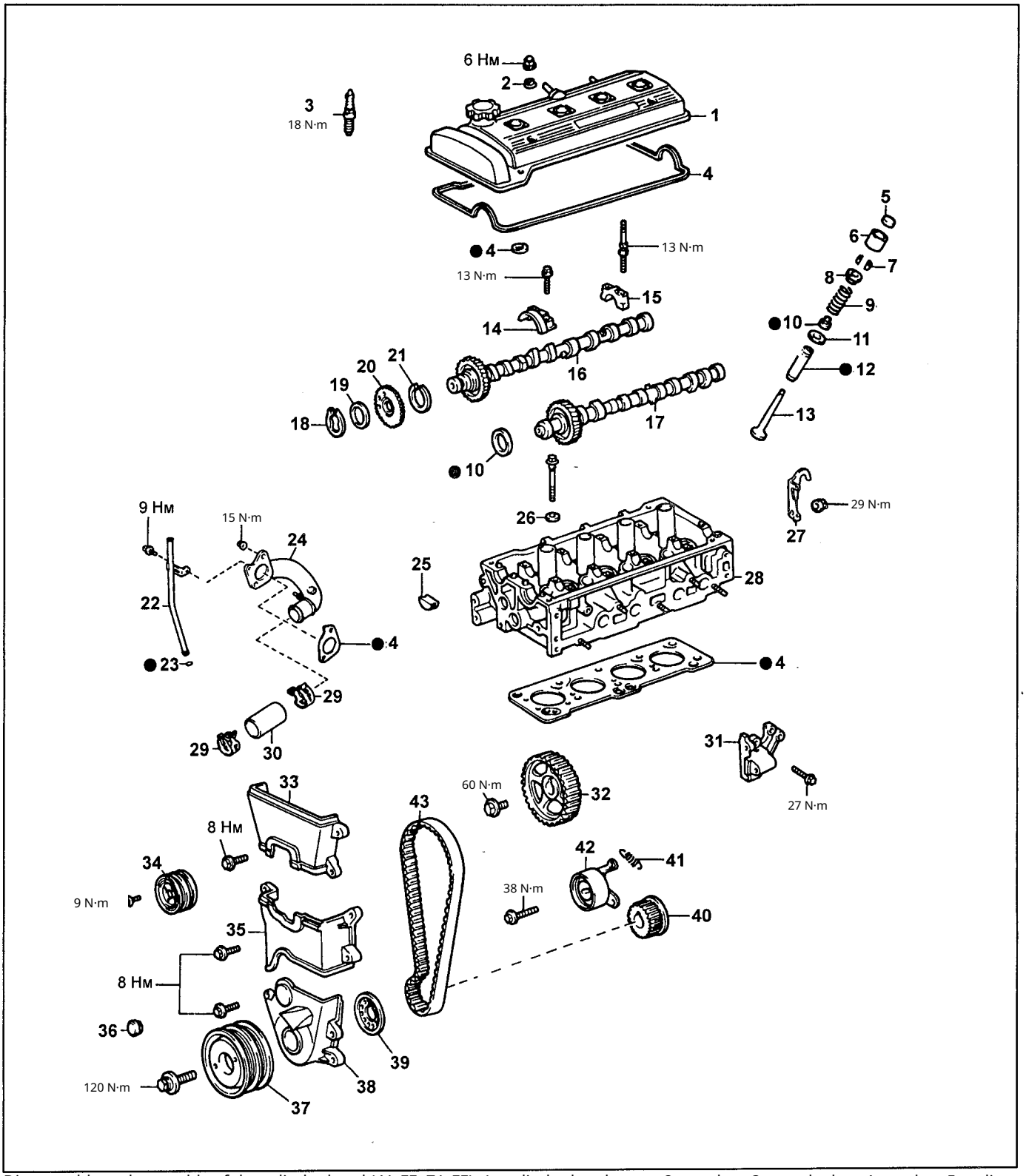

Disassembly and assembly of the cylinder head (4A-FE, 7A-FE). 1 - cylinder head cover, 2 - washer, 3 - spark plug, 4 - gasket, 5 - adjustment shim, 6 - tappet, 7 - keeper, 8 - valve spring retainer, 9 - oil seal, 11 spring, 10 - spring seat, 12 - valve guide, 13 - valve, 14 - bearing cap No.1 of the camshaft, 15 - camshaft bearing cap, 16 - camshaft No.1 (intake valves), 17 - camshaft No.2 (exhaust valves), 18 - snap ring, 19 - wave spring, 20 - idler gear, 21 - spring, 22 - oil dipstick guide, 23 - O-ring, 24 - coolant inlet pipe, clamp, 25 - segmented plug, 26 - washer, 27 - engine lifting hook, 28 - cylinder head, 29 30 - coolant inlet hose, 31 - alternator bracket, 32 - camshaft pulley, 33 - timing belt cover No.3, 34 - water pump pulley, 35 - timing belt cover No.2, 36 - plug, 37 - crankshaft pulley, 38 - timing belt cover No.1, 39 - timing belt guide, 40 - toothed crankshaft pulley, 41 - tensioner spring, 42 - tensioner pulley, 43 - timing belt.

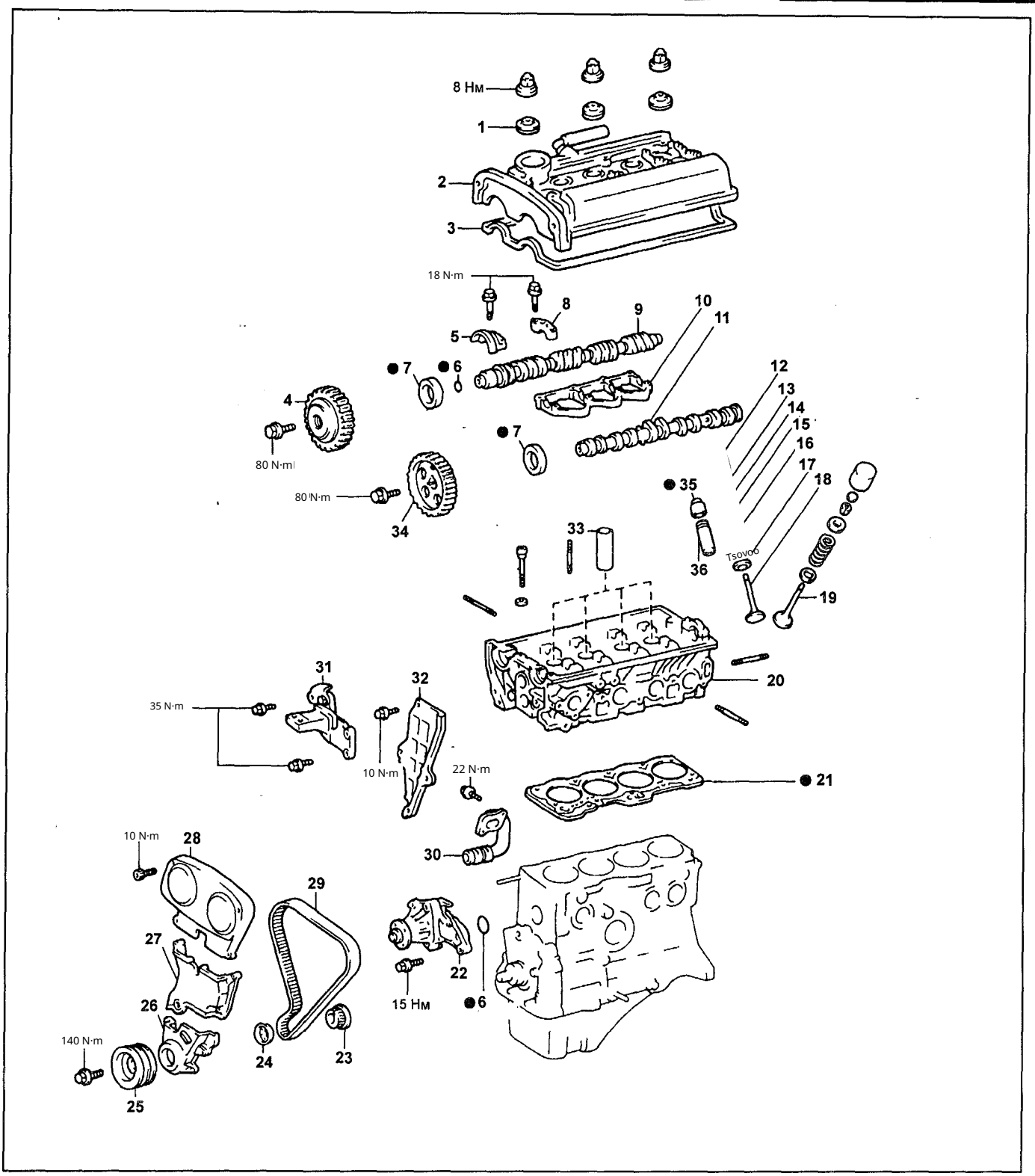

Disassembly and assembly of the cylinder head (4A-GE). 1 - washer, 2 - cylinder head cover, 3 - cylinder head cover gasket, 4 - timing sprocket of the camshaft assembled with the VVT mechanism, 5 - camshaft bearing cap No.1, 6 - O-ring seal, 7 - oil seal, 8 - camshaft bearing cap No.2, 9 - camshaft No.1 (intake valves), 10 - bearing support for the intake camshaft, 11 - camshaft No.2 (exhaust valves), 12 - tappet, 13 - adjusting shim, 14 - valve keeper (collet), 15 - valve spring retainer, 16 - valve spring, 17 - valve spring seat, 18 - valve spring seat (duplicate), 19 - intake valve, 20 - exhaust valve, 21 - cylinder head gasket, 22 - coolant pump, 23 - crankshaft timing sprocket, 24 - timing belt guide, 25 - crankshaft pulley, 26 - timing belt cover No.1, 27 - timing belt cover No.2, 28 - timing belt cover No.3, 29 - timing belt, 30 - coolant inlet pipe No.2, 31 - right engine mount, 32 - timing belt cover No.4, 33 - spark plug tube, 34 - camshaft pulleyvalve stem seal, 35 - valve oil seal, 36 - valve guide.

c) Using a press, press in the new spark plug protective sleeve, ensuring it projects the distance specified by the technical specifications from the surface of the camshaft bearing cap joint (or from the surface of the cylinder head joint and head cover of the 4A-CE engine).

Attention: do not press the tube in more than necessary.

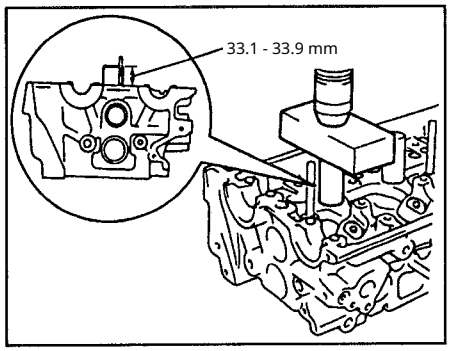

4A-GE.

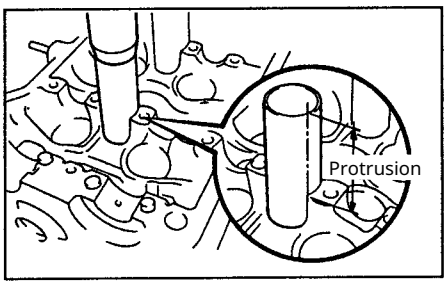

4A-FE, 7A-FE.

2. Install the valves.

a) Using a suitable tool, install new valve stem seals.

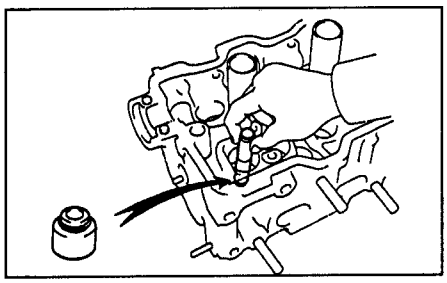

Note: The intake valve stem seals are painted gray or brown, while the exhaust valve stem seals are painted green or black.

b) Install the following parts:
(1) valve;
(2) spring seat;
(3) valve spring;
(4) spring seat.

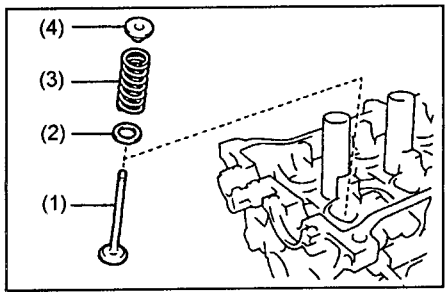

c) Using a suitable tool, compress the valve spring and place the two keepers around the valve stem.

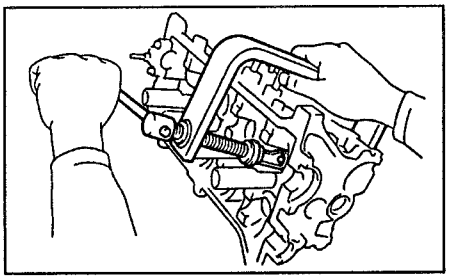

g) Using a hammer with a plastic head, lightly strike the end of the valve stem to ensure the valve is securely held by the keepers.

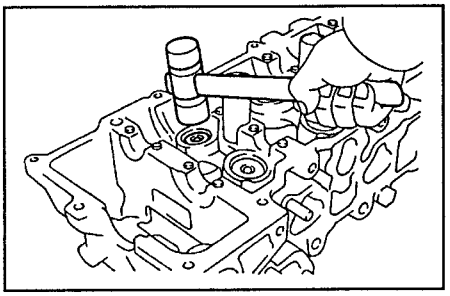

3. Install the valve lifters and adjustment shims; make sure the lifters rotate freely by hand.

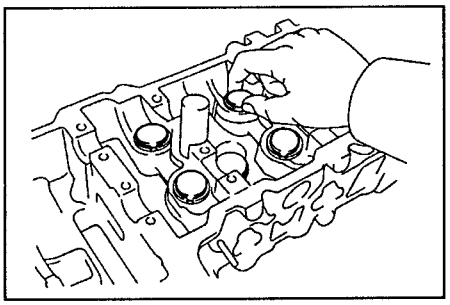

Engine block

Disassembly of the cylinder block

1. Unscrew the six bolts and remove the rear oil seal retainer and the gasket.

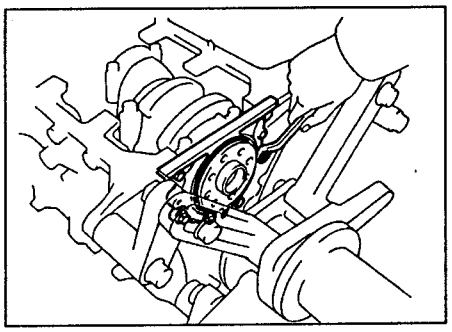

2. Check the axial clearance of the connecting-rod bearing with a dial indicator by moving the rod back and forth on the crankpin journal.
shaft journal.

Standard axial clearance ..... 0.150 - 0.250 mm

Maximum axial clearance ..... 0.30 mm

If the axial clearance exceeds the maximum allowable, replace the connecting rod assembly. If necessary, replace the crankshaft.

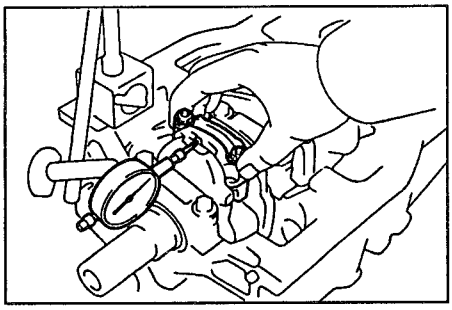

3. Remove the connecting rod cap and check the radial clearance of the connecting rod bearing.
of the bearing.

a) Check the alignment of the marks on the connecting rod and the connecting rod cap to ensure correct assembly later on.
If marks are missing, use a center punch to make marks on the caps and rods.

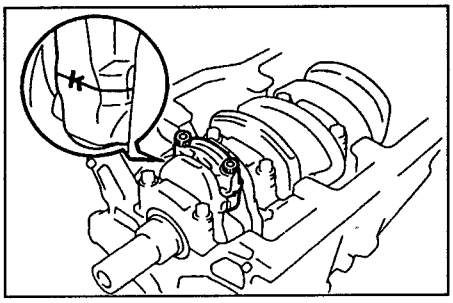

b) Unscrew the two nuts (bolts) securing the lower connecting rod cap.

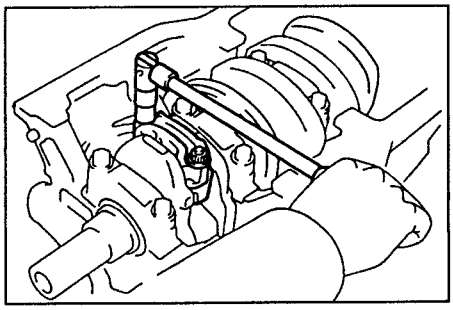

c) Using a hammer with a plastic head, lightly tap the connecting-rod bolts to free the lower bearing cap of the rod.

Note: the lower half of the bearing insert must remain in the connecting-rod cap.

d) Fit pieces of hose over the protruding ends of the bolts to prevent damage to the crank-pin surface of the connecting rod journal.

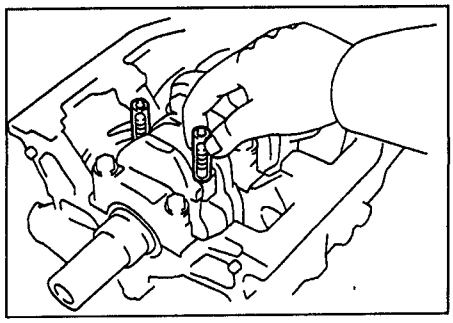

d) Clean the connecting rod journal and bearings.
e) Inspect the surfaces of the connecting rod journal and the bearing for any pitting corrosion and scratches. If scoring or galling is present, replace the bearings. If necessary, regrind the journals or replace the crankshaft.

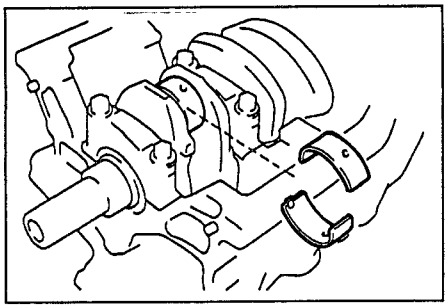

Note: do not confuse the upper and lower bearing shells.

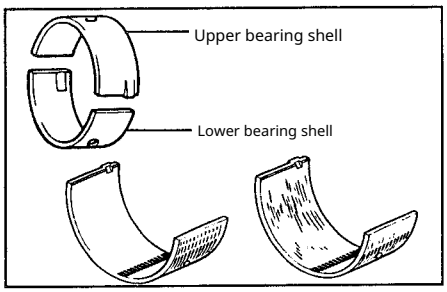

g) Insert the plastic gauge to measure the clearances in the plain bearings across the connecting rod journal.

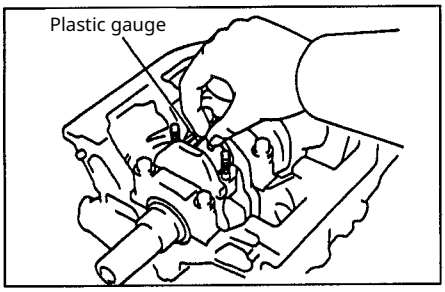

3) Install the lower connecting rod cap, aligning the installation marks.

Tightening torque:
1st stage... ..... 25–29 N·m
2nd stage.... .....turn an additional 90°

Note:
- Do not rotate the crankshaft. - Apply a little oil to the threads of the bolts and under the nuts (under the bolt heads for the 7A-FE) before installing them. i) Remove the lower connecting rod cap by unscrewing the nuts (bolts for the 7A-FE).
k) Measure the maximum width of the flattened feeler wire, using it to determine the size of the connecting rod bearing clearance.

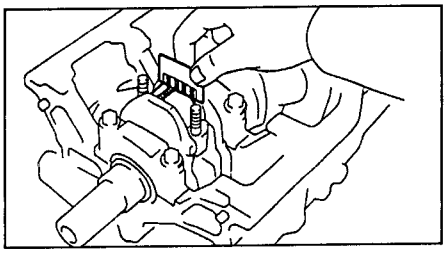

Connecting rod bearing clearance:
Engines 4A-FE, 4A-GE:
nominal 0.020 - 0.051 mm service (0.25)..... 0.019 - 0.065 mm maximum 0.08 mm Engine 7A-FE: .....
nominal 0.020 - 0.044 mm.....
service (0.25).... 0.019 - 0.058 mm maximum 0.08 mm If the clearance exceeds the maximum,
replace the bearings. If necessary, grind or replace the crankshaft. See nominal and service crankshaft dimensions later in the subsection “Crankshaft Inspection and Repair.” Note: when replacing bearings with nominal size, use bearings from the same size group indicated on the bearing cap. There are bearing size groups marked “1”, “2”, “3”. The projection (mark “front”) on the connecting rod cap must be oriented toward the front of the engine (toward the
side opposite the power take-off).

Nominal bearing thickness sizes: mark “1”
..... 1.486 - 1.490 mm
mark “2” ..... 1.490 - 1.494 mm
mark “3”. ..... 1.494 - 1.498 mm
service (0.25)
4A-FE, 7A-FE. ..... 1,607 - 1,613 mm
4A-GE. ..... 1,603 - 1,613 mm

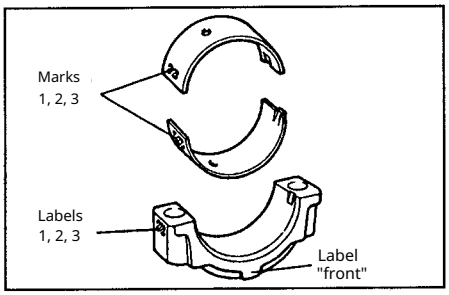

4A-FE, 7A-FE.

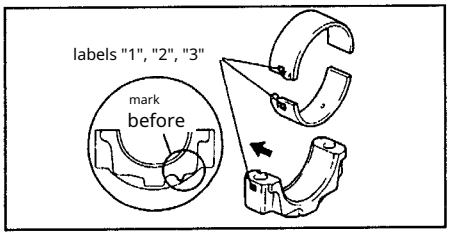

4A-GE.

l) Remove the remnants of the calibration wire from the working surfaces of the journal and bearing shell.
4. Remove the piston and connecting rod assembly. a) Use a reamer to remove carbon deposits from the upper part of the cylinder, as shown in the illustration.

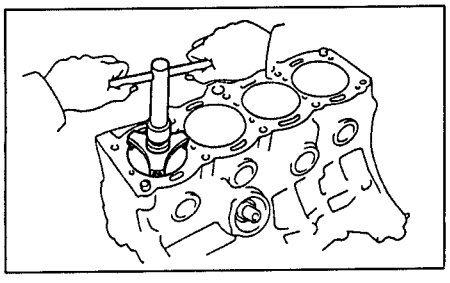

b) Cover the connecting rod bolts with cut pieces of hose to protect the crankshaft from damage. c) Remove the piston assembled with the connecting rod and the upper bearing shell through the top of the engine block. Note:

- Keep the bearings, connecting rod, and cap together.
- Arrange the pistons assembled with the connecting rods and bearing shells in a specific order.

5. Using a dial indicator, measure the axial clearance of the crankshaft by moving it "back and forth" with a screw driver.

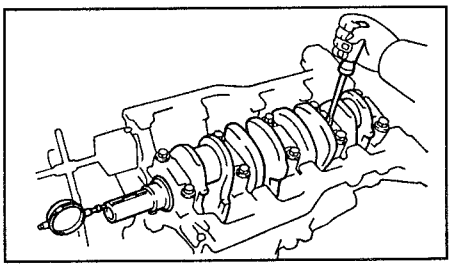

Standard axial
clearance ..... 0.020 - 0.022 mm Maximum axial clearance ..... 0.3 mm If the axial clearance exceeds the maximum allowable value, replace the thrust half-rings.
Thrust half-ring thickness.... ..... 2.440 - 2.490 mm
6. Remove the main bearing caps and check the radial oil clearances.

a) Loosen and unscrew the main bearing cap bolts evenly in several stages, as shown in the illustration.

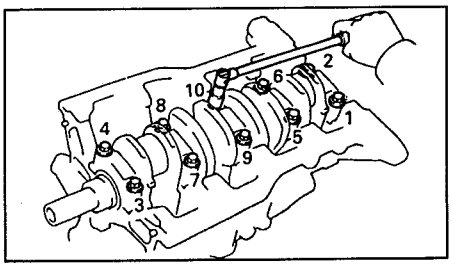

b) By rocking the unscrewed bolts in the holes of the main bearing caps, separate and remove the caps together with the lower bearing shells and the LOWER thrust half-rings (the latter are installed only in the area of main bearing No. 3). Note:

- Keep the main bearing caps together with the lower bearing shells.
- Arrange the main bearing caps and thrust half-rings in a specific order.

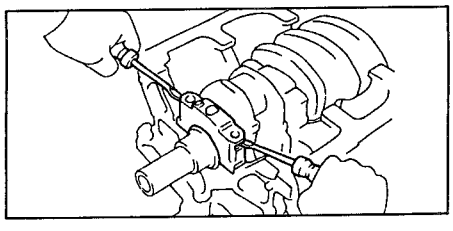

c) Lift the crankshaft. Note: leav e the upper bearing shells and upper th rust half-rings in the engine block.

d) Clean each main journal and bearing shells.

d) Inspect the surface of each main journ al and bearing shell for any signs of pitti ng corrosion and scratches.

- If the journal or bearing shell is da maged, replace the bearing shells. If necessary, regrind or replace the crankshaft. e) Place the crankshaft into the engine block.

f) Place the plastic gauge for measuring clearance in the plain bearings on each main journal.

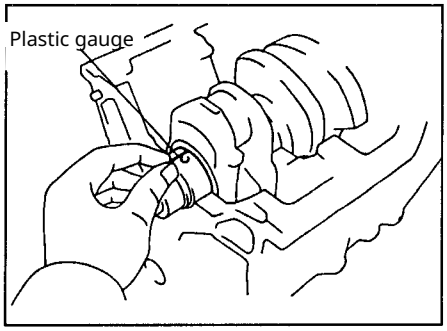

3) Install the main bearing caps and tig hten the bolts in the sequence shown i n the illustration.

sequence.

Tightening torque: 60 N·m. Note: Do not rotate the crankshaft.

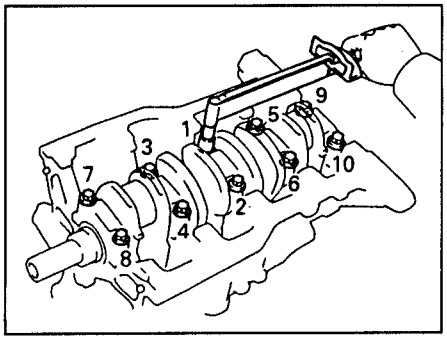

g) Remove the main bearing caps with t he lower shells and the thrust half-rings (the latter are installed only at main bear ing No. 3).

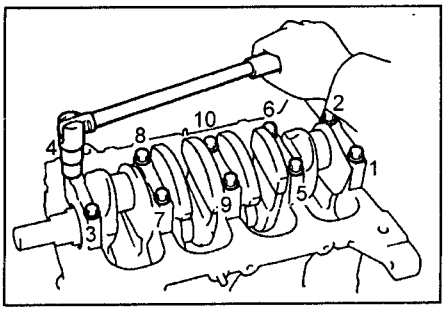

c) Measure the maximum width of the fl attened calibration wire to determine th e value of the radial oil clearance from it .

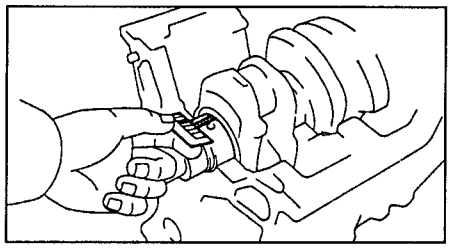

Main bearing clearance:

4A-FE, 7A-FE:

standard: ..... 0.015 - 0.033 mm
repair (0.25)..... 0.015 - 0.053 mm
maximum. ..... 0.080 mm

4A-GE:

nominal ..... 0.015 - 0.045 mm repair (0. 25).... 0.015 - 0.053 mm maximum 0.080 mm If the oil cle ..... arance is greater than the maximum, replace the bearings. If necessary, grind or replace th e crankshaft. Note: when replacing bea rings of nominal size, you must u se bearings from the same size group. If t he size group number of the bearings can not be determined, select the required be aring using the table by adding the size gr oup number of the engine block to the siz e group number of the crankshaft. There are five standard bearing size groups label ed \"1\", \"2\", \"3\", \"4\" and \"5\", respect ively.

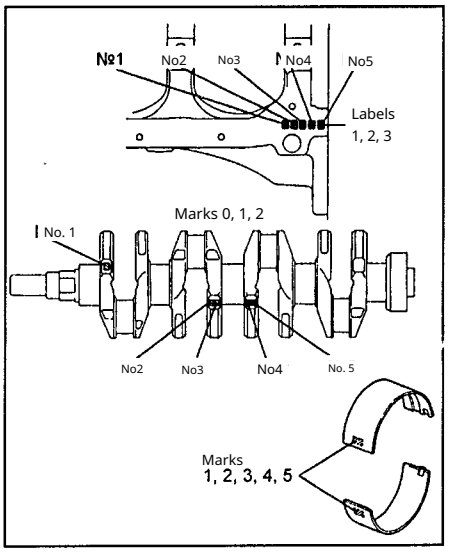

	Mark								
Block cylinders	1			2			3		
Crankshaft shaft	0	1	2	0	1	2	0	1	2
Bearing shell	1	2	3	2	3	4	3	4	5

Example: Mark "2" on the cylinder block + mark "1" on the crankshaft = total "3" (required bearing No. 3).

Diameter of the main bearing seat of the cylin der block: mark "1". mark "2"
..... 52.025 - 52.031 mm
..... 52.031 - 52.037 mm
mark "3". ..... 52.037 - 52.043 mm

Diameter of the main journal of the crankshaft:

mark \"0\". ..... 47.994 48.000 mm
mark \"1\". ..... 47.988-47.994 mm
mark "2" ..... 47.982 - 47.988 mm
rem. (0.25) ..... 47.745 - 47.755 mm

Wall thickness liner (in the central part):

mark "1" ..... 2.002 - 2.005 mm
mark "2" ..... 2.005 - 2.008 mm
mark "3". ..... 2.008 - 2.011 mm
mark "4" ..... 2.011- 2.014 mm
mark "5". ..... 2.014- 2.017 mm
rem. (0.25) ..... 2.121 - 2.126 mm

l) Remove the plastic gauges.

7. Remove the crankshaft.

a) Raise the crankshaft. b) Remo ve the upper shells of the main bearing s and the upper thrust half-rings from the cylinder block. Note: arrange the main bearing shells and thrust half-rings in a specific order.

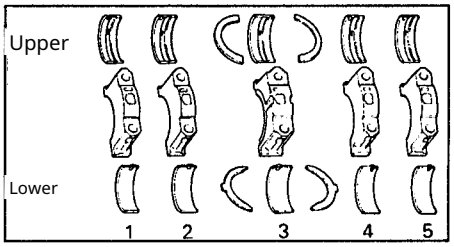

8. (4A-GE) Remove the oil injectors.

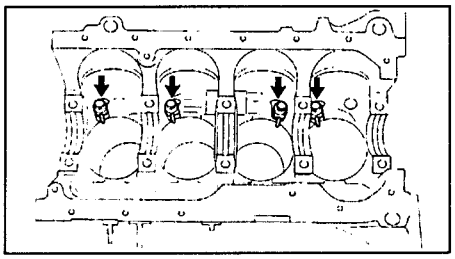

Inspection of the cylinder block

1. Clean the cylinder block.

a) Remove gasket residues from the wor king surfaces of the block with a scraper , spatula, or wire brush. b) Finally cle an the cylinder block with solvent and a soft brush.

2. Check the mating surface of the cylinder bl ock for flatness using a precision straightedg e and a flat feeler gauge. Maximum flatness deviation. ..... 0.05 mm

If the flatness deviation exceeds the specifie d value, replace the cylinder block or have it resurfaced.

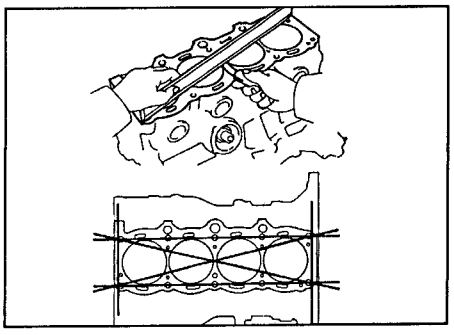

3. Inspect the cylinder bore for vertical scratches. If dee p scratches are present, re-bo re the cylinder block to the repair si ze or replace the cylinder block if ne cessary. 4. Check the cylinder diame ter. Note: there are three size gro ups of standard cylinder diam eters, marked

"1", "2" and "3" respectively. The mark is ap plied to the surface of the cylinder block as s hown in the illustration.

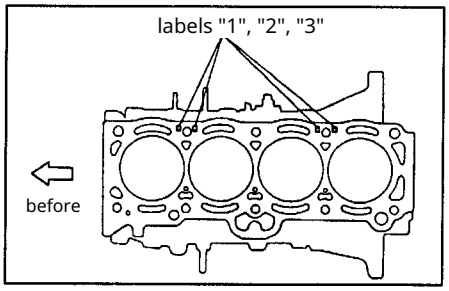

Using an inside micrometer measure the cylinder diameter at three levels A, B and C in the transverse (1) and longitudinal (2) directions as shown in the figure.

mark "1". ..... 81.000 - 81.010 mm
mark "2". ..... 81.010 - 81.020 mm
mark "3". ..... 81.020 - 81.030 mm
service limit (0.50). ..... 81.500 - 81.530 mm

If the diameter exceeds the maximum permissible limit, bore all four cylinders. If necessary, replace the cylinder block.

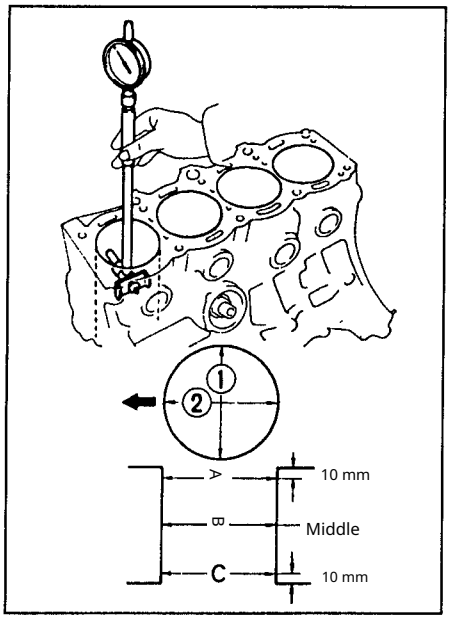

5. Use a reamer to remove the ridge at t he top of the cylinder block if the wear is less than 0.2 mm.

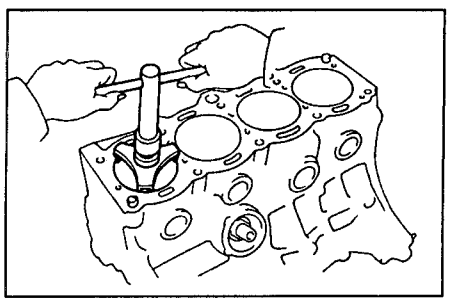

"Piston-connecting rod"

1. Check the fit of the "piston-wrist pin" connection by attempting to move the p iston "back and forth" on the wrist pin in a direction perpendicular to the piston axis.

If a noticeable play is present replace- remove the entire assembly.

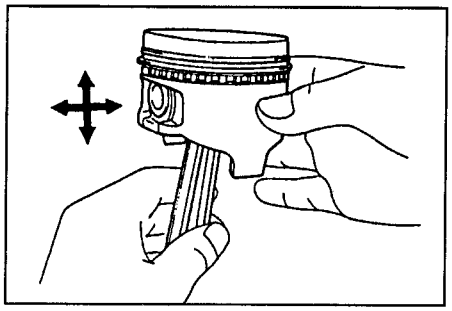

2. Remove the piston rings.

a) Using a special tool (an expander or a screwdriver), remove both com- pression rings.

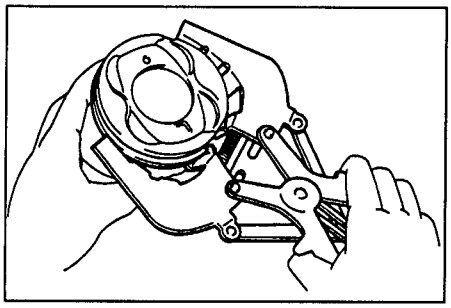

b) Manually remove the oil-ring elem ents (scrapers and ring expander).

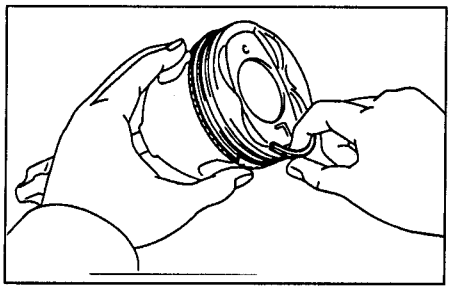

Note: lay out the rings in the correct order.

3. Disconnect the connecting rod from the piston.

4A-FE, 7A-FE

Using a suitable tool, press the piston pi n out of the piston bosses and the small end of the connecting rod. Remove the c onnecting rod.

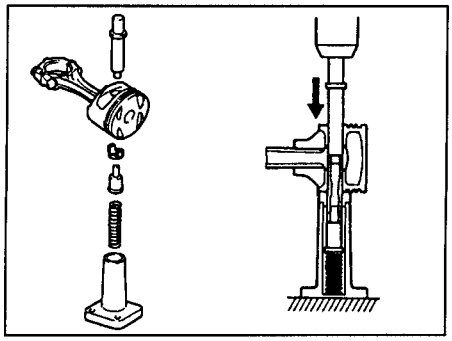

4A-GE

- Insert a flat screwdriver into recess "A" and carefully remove the retaining ring.

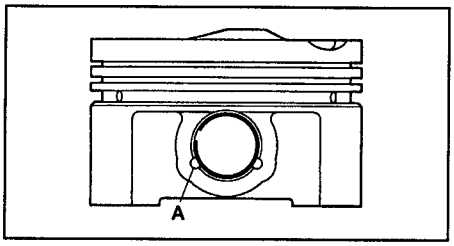

b) Gradually heat the piston to 70–80°C.

c) Using a plastic hammer and a brass d rift, gently tap out the piston pin from t he piston crown of the connecting rod.

Note:

- Do not disassemble the piston and piston pin.
- Lay out the piston group compon ents in the required order.

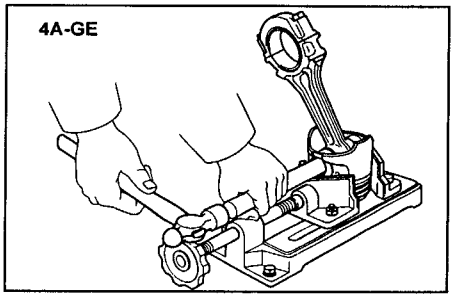

Inspection of the piston and connecting rod conditio n 1. Clean the piston.

a) Use a scraper to remove carbon deposit s and other soot from the piston crown. piston.

6) Clean the piston grooves of deposi ts with a piece of a broken ring.

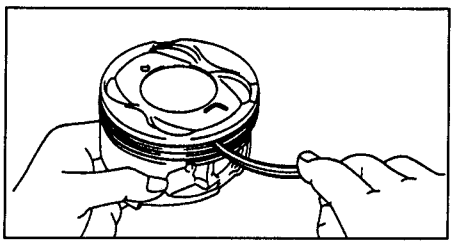

c) Finally clean the piston with solvent and a soft-bristled brush.

Note: do not use a wire brush.

2. Inspect the piston and piston rings.

A. Check the clearance between the piston and the cylinder.

Note: there are three nominal piston diame ter size groups marked with labels (number s) "1", "2", and "3", respectively. The mark is applied on the piston crown at the edge in a direction perpendicular to the piston pin axis or on the center of the piston crown. P ay attention to the "front" mark (recess), by which the piston must be installed in the cy linder.

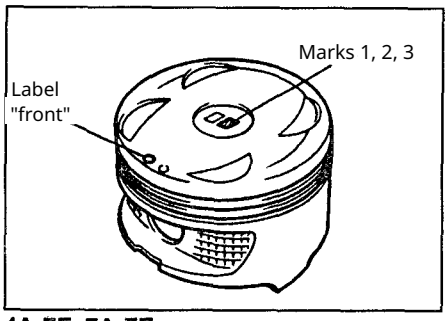

4A-FE, 7A-FE.

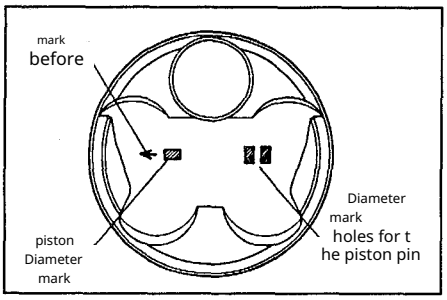

4A-GE.

a) (4A-FE, 7A-FE) Using a micrometer, me asure the diameter of the piston skirt at a distance of 24.5 mm from the piston cr own surface (below the level of the pisto n ring grooves) and in the direction perp endicular to the axis of the piston pin, as shown in the illustration.

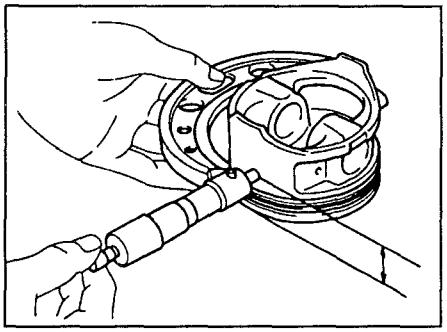

Nominal piston diameter:
mark \"1\". ..... 80.905 - 80.915 mm
mark "2". ..... 80.915 - 80.925 mm
mark "3". ..... 80.925 - 80.935 mm
repair (0.50). ..... 81.430 - 81.460 mm

6) (4A-GE) Using a micrometer, measure the piston diameter at a distance of 8 mm from the axis of the piston pin hole, as shown in the illustration.

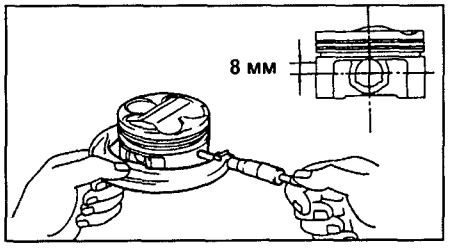

Nominal piston diameter:
mark \"1\". ..... 80.895 - 80.905 mm
mark "2". ..... 80.905 - 80.915 mm
mark "3". ..... 80.915 - 80.925 mm
rem. (0.50).. ..... 81.395 - 81.425 mm

c) Measure the cylinder diameters in the engine axis direction. d) Find th e difference between the measured pisto n diameter and the cylin- der diameter.

Clearance between the cylinder and the piston:
4A-FE, 7A-FE:
standard: ..... 0.085 - 0.105 mm
maximum.. ..... 0.130 mm
4A-GE:
nominal. ..... 0.095 - 0.115 mm

If the clearance is greater than the maximu m, replace all four pistons and machine out all four cylinders. If necessary, replace the cylinder block. Note: when using a new cy linder block, use pistons with the same mar k (number) as the cylinder diameter. The cy linder diameter marking is applied to the c ylinder block at the locations shown in the i llustration.

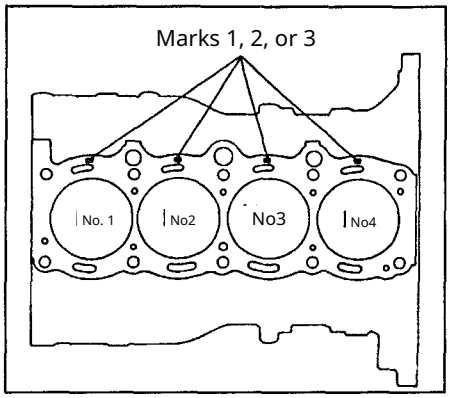

B. Check the end gap of the "compression ring-p iston" - groove", measuring it with a flat feeler gauge, as shown in the illustration.

Standard gap:
Compression ring No. 1:
4A-FE, 7A-FE:
T..... 0.050 - 0.085 mm
R..... 0.045 - 0.080 mm
4A-GE..... 0.040 - 0.080 mm
Compression ring No. 2:
4A-FE, 7A-FE..... 0.030 - 0.070 mm
4A-GE..... 0.030 - 0.070 mm
Oil control ring:
T.. ..... 0.02 - 0.16 mm
R..... 0.03 - 0.11 mm

Note: "T" - original, "R" - "Riken".

If the clearance exceeds the allowable limit, replace the piston.

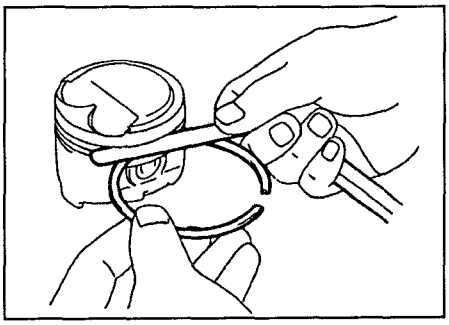

B. Check the piston ring end gap; bore all cylinders or the ring.

a) Insert the piston ring into the cylind er.

b) Using the piston, push the ring to a distance of 107 mm (7A-FE); 100 mm (4 A-FE); 80 mm (4A-GE) from the surface of the cylinder block, as shown in the ill ustration.

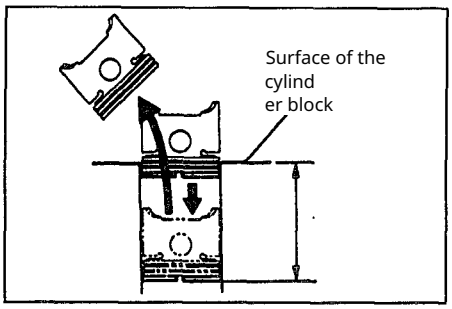

c) Use a flat feeler gauge to measure the clearance in the lock.

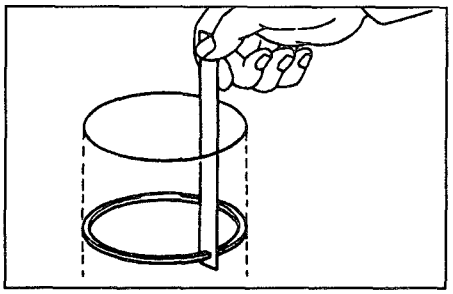

Engines 4A-FE, 7A-FE:
Standard clearance:
compression ring No. 1 ..... 0.25–0.35 mm
compression ring No. 2 ..... 0.35–0.50 mm
oil control ring (by scrapers)
T. ..... 0.15–0.40 mm
R (4A-FE) ..... 0.10 -0.40 mm
R (7A-FE) ..... 0.10 -0.35 mm
Maximum clearance:
compression ring No. 1 ..... 1.07 mm
compression ring No. 2 ..... 1.02 mm
oil control ring (by scrapers). ..... 1.62 mm

Engine 4A-GE:
Standard gap:
Compression ring No. 1:
T... ..... 0.31 - 0.44 mm
R..... 0.28 - 0.44 mm
compression ring No. 2 ..... 0.38 - 0.50 mm
oil control ring (by scrapers)
T.. ..... 0.18 - 0.49 mm
R..... 0.13 - 0.49 mm
Maximum clearance:
compression ring No. 1 ..... 0.95 mm
compression ring No. 2 ..... 1.05 mm
oil control ring (by scrapers)... ..... 1.00 mm

Note: "T" - original, "R" - "Riken".

If the ring end gap is greater than the maxi- mal, replace the piston ring. If the end gap is greater than the maximum even with a new p iston replace the cylinder block.

C. (4A-GE) Check the piston pin.

With the piston heated to 80°C, the pisto n pin should move within the piston with out significant force. After inspectio n, remove the piston pin.

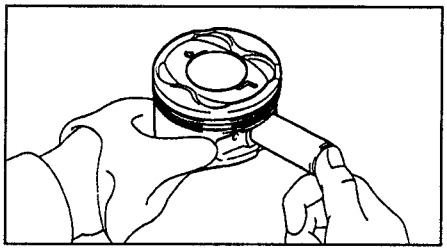

3. Check the rod alignment. A. Using a special tool and a flat feeler gauge, check the rod bending as shown in the illustration.

Maximum allowable bending per 100 mm length..... .....0.05 mm

If the twisting exceeds the allowable limit, replace the rod together with the rod cap.

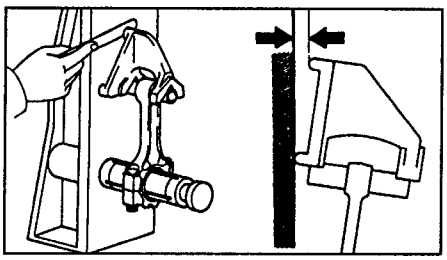

In the same way, check the rod twisting as shown in the illustration.

Maximum twisting per 100 mm length .....0.05 mm

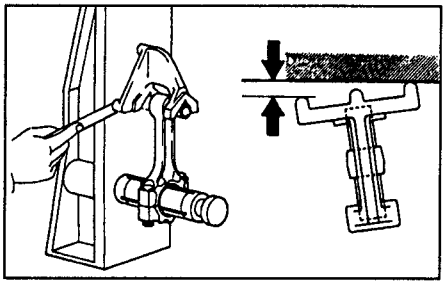

B. (4A-GE) Check the piston pin oil clearance.

a) Measure the inner diameter of the bushing in the small end of the connecting rod using an inside micrometer.

Inner diameter of the bushing..... 20.010 - 22.020 mm

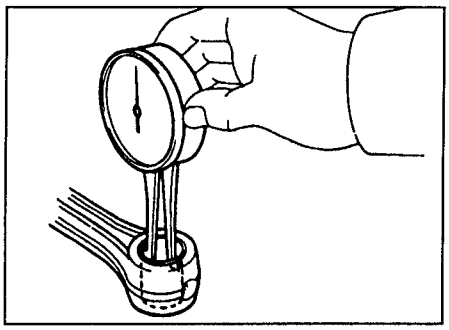

b) Using a micrometer, measure the diameter of the piston pin.

Piston pin diameter:
mark "A" 20.004 - 20.006 mm
mark "B" 20.006 - 20.008 mm
mark "C" ..... 20.008 - 20.010 mm
mark "D". ..... 20.010 - 20.012 mm
mark "E" ..... 20.012 - 20.014 mm
mark "F". ..... 20.014 - 20.016 mm

Diameter of the hole in the piston:
mark "AB" ..... 20.003 - 20.007 mm
mark "CD". ..... 20.007 - 20.011 mm
mark "EF". ..... 20.011 - 20.015 mm

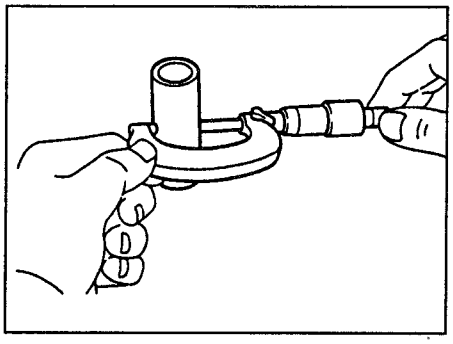

c) Subtract the measured value of the piston pin diameter from the measured value of the inner bore diameter of the bushing.

Nominal oil clearance. ..... 0.004 - 0.008 mm
Maximum oil gap.. ..... 0.05 mm

If the oil clearance is greater than the maximum, replace the bushing. If necessary, replace the piston and piston pin as an assembly. B. (4A-GE) If necessary, replace the big-end bushing of the connecting rod.

a) Using a driver and a press, press the bushing out of the connecting rod big end.

6) Align the oil holes of the new bushing and the connecting rod and press the bushing in.

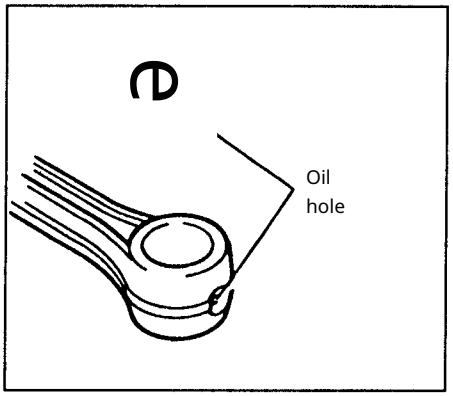

c) Measure the piston pin oil clearance and, if necessary, grind or re-bore the new bushing until the nominal clearance is achieved.

d) Make sure the piston pin (lightly lubricated with engine oil beforehand) can be inserted into the pressed-in connecting rod bushing at room temperature using the force of the thumb.

G. (4A-FE, 7A-FE) Inspect the connecting rod bolts.

a) Thread a nut onto each bolt and ensure the nut can be easily turned by hand along the full length of the bolt thread.

b) If the nut cannot be screwed on by hand, measure the external diameter. Inspection and repair of the bolt thread with a caliper in the crankshaft area of greatest thread wear. Standard diameter: 8.86–9.00 mm Minimum diameter: 8.60 mm

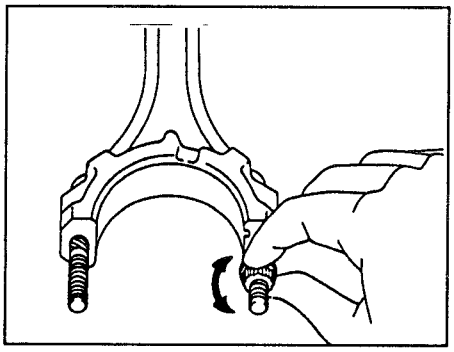

Note: If such an area is difficult to detect visually, take the measurement 15 mm from the end of the bolt as shown in the illustration.

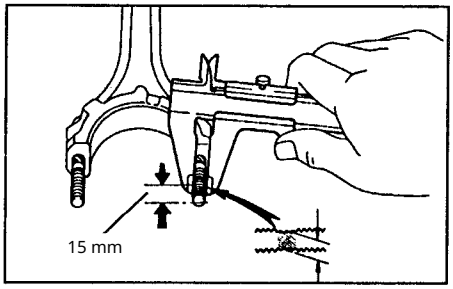

If the external diameter of the thread is less than the minimum allowable, replace the connecting rod bolt and nut as a single assembly. Cylinder boring Note:

- Bore all cylinders to the same overhaul size (for overhaul-diameter pistons).
- Install piston rings of the same overhaul size corresponding to the overhaul piston size.

1. Select pistons of the overhaul size.

Overhaul (0.50) piston diameter:
4A-FE, 7A-FE..... 81.430 - 81.460 mm
4A-GE 81.395 - 81.425 mm

2. Calculate the overhaul size for cylinder boring.

a) Measure the diameter of the piston skirt with a micrometer as shown above in the section "Disassembly of the Piston-Connecting Rod" unit.

b) Calculate the cylinder diameter for boring.

The size to which the cylinder must be bored = P + C - H
P = piston diameter, mm
C = piston oil clearance
4A-FE, 7A-FE: 0.085 - 0.105 mm
4A-GE: 0.095 - 0.115 mm
N = allowance for honing 0.095 - 0.115 mm
..... 0.02 mm or less

3. Bore and hone the cylinder to the required dimensions.

Maximum tolerance for regrinding ..... 0.02 MM

Inspection and repair of the crankshaft area of gre

1. Checking crankshaft runout. a) Place the crankshaft on prisms.

b) Using a dial indicator, check the crankshaft runout on the central main journal. Maximum runout: 0.06 MM

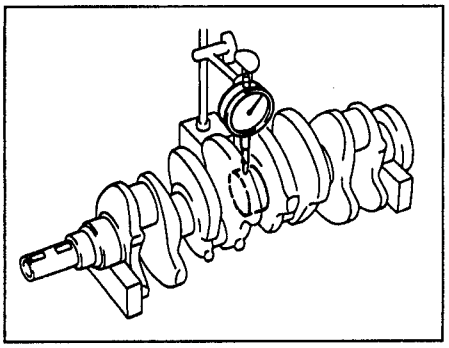

If the runout exceeds the maximum allowable limit, replace the crankshaft. 2. Inspect the connecting rod and main journals.

a) Using a micrometer, measure the diameter of each connecting rod and main journal in two mutually perpendicular planes, as shown in the illustration.

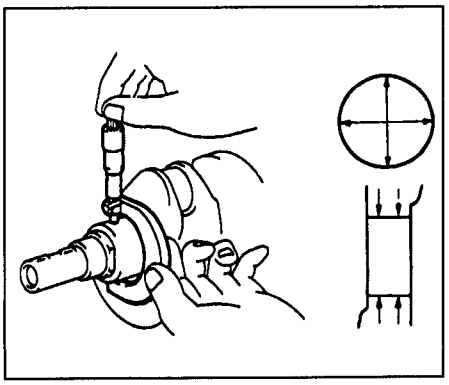

Main journal diameter:
4A-FE, 7A-FE:
nominal 47.982 - 48.000 mm
service 47.745 - 47.755 mm
Connecting rod journal diameter:
4A-FE:
nominal .... 39.985 - 40.000 mm
service .39.745 - 39.755 mm
7A-FE:
nominal .... 47.988 - 48.000 mm
service .47.745 - 47.755 mm
4A-GE:
nominal .... 41.985 - 42.000 mm
service ..... 41.745 - 41.755 mm

If the diameter values fall outside the specified limits, check the oil clearances. If necessary, regrind or replace the crankshaft.

Note: the service diameter of the journals is reduced by 0.25 mm compared with the nominal.

b) Check the connecting rod and main journals for taper and out-of-roundness, as shown in the previous illustration.
Maximum
taper and ovality..... 0.02 mm
If the taper or out-of-roundness exceeds the allowable limit, replace the crankshaft.
If necessary, regrind the connecting rod and main journals to the repair size and select repair-size bearings.

Note: there are two methods ("A" and "B") for replacing the crankshaft oil seals.
crankshaft.
1. Replace the front crankshaft oil seal.
shaft journal.
A. With the oil pump removed from the cylinder block.
a) Using a screwdriver and a hammer, drive out the oil seal as shown in the illustration.

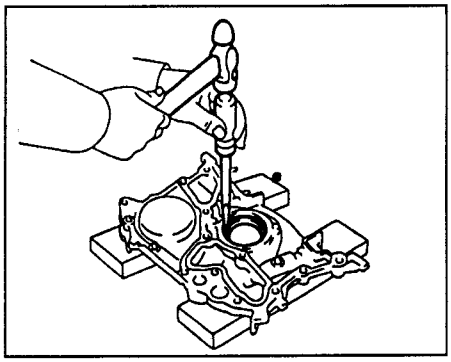

b) Using a tube of appropriate diameter and a hammer, press in the new oil seal until its surface is flush with the oil pump housing.

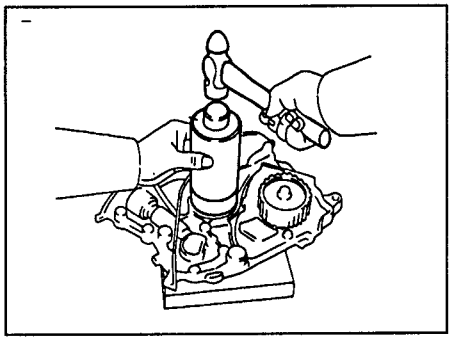

c) Apply grease to the lip of the oil seal.

B. With the oil pump installed on the cylinder block:
a) Using a knife, trim the protruding lip of the oil seal. b) Using a screwdriver wrapped in insulating tape, remove the oil seal. Note: Do not damage the crankshaft.

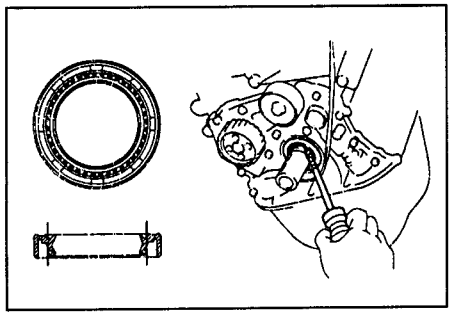

c) Apply grease to the lip of the new oil seal. d) Using a suitable tool and a hammer, press in the oil seal until its face is flush with the edge of the oil pump housing.

2. Replace the rear crankshaft oil seal.

A. The rear oil seal holder has been removed from the cylinder block.
a) Using a screwdriver and a hammer, drive out the oil seal.

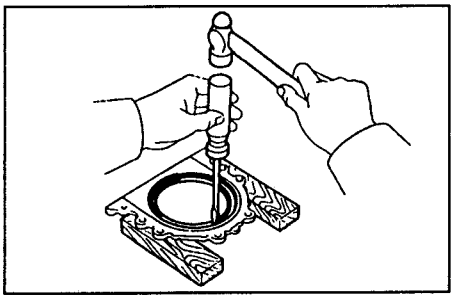

b) Using a suitable tool and a hammer, press in the new seal until its surface is flush with the edge of the rear oil seal holder.

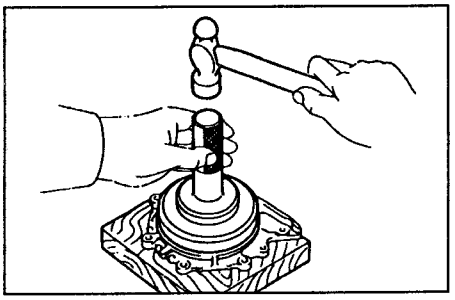

c) Apply grease to the lip of the oil seal.

C. The rear oil seal retainer is installed on the cylinder block.
a) Use a knife to cut off the lip of the oil seal. b) Using a screwdriver (wrapped in insulating tape), remove the oil seal.
Note: Do not damage the crankshaft.

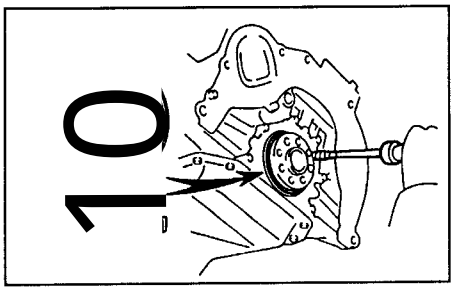

c) Apply grease to the lip of the new oil seal.
g) Using an appropriate tool and a hammer, press the new oil seal in until its surface is flush with the edge of the rear seal retainer.

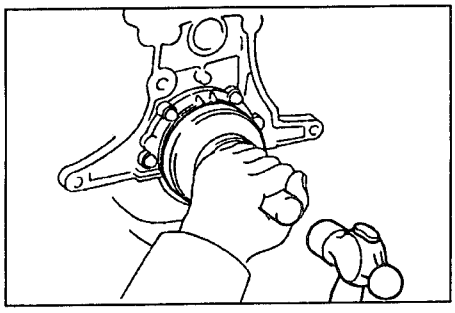

Assembly of the unit "piston - connecting rod"

1. Assemble connecting-rod and piston the group.

4A-FE, 7A-FE

a) Apply a little engine oil to the piston pin and into the boss holes of the piston.

b) Align the "FRONT" marks: the piston (recess) and the connecting rod (projection).

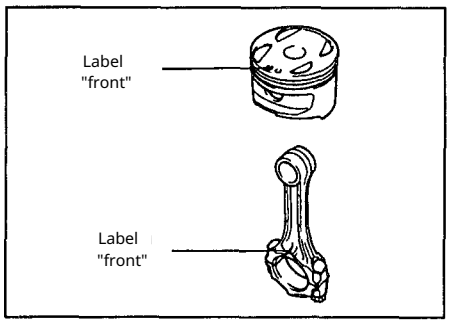

c) Using the tools shown in the illustration, connect the piston and the connecting rod with the piston pin.

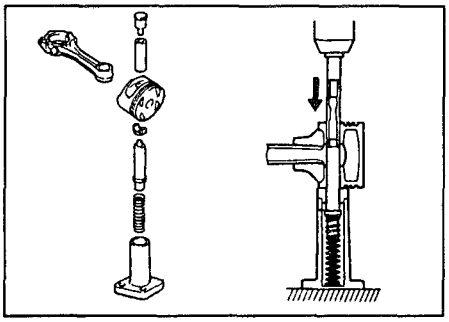

c) Make sure that the piston rotates freely on the piston pin.

4A-GE

a) Install the retaining ring
- Fit one edge of the retaining ring in to groove "A" (see illustration).
- Place edge "B" into the groove beneath the retaining ring.
- By pressing at point "C", install the retaining ring.
- Insert the screwdriver into recess "D" and finally set the retaining ring into the groove.

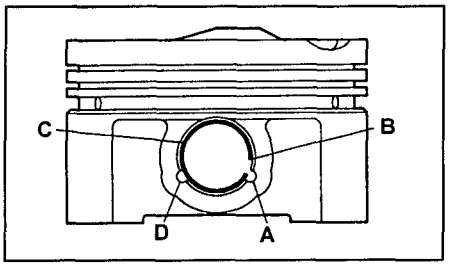

b) Gradually heat the piston in a water bath to 70–80°C.

c) Apply a layer of engine oil to the piston pin.

g) Align the "FRONT" marks: the piston (notch or arrow) and the connecting rod (protrusion). Then, using the force of your thumb, push the piston pin through the other boss and the connecting rod bushing until it stops at the retainer of the first boss, thereby connecting the piston and connecting rod with the piston pin.

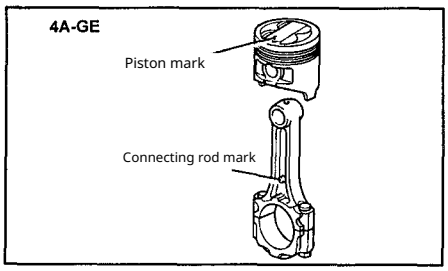

d) Install a new retaining ring into the groove of the hole of the other piston boss.

2. Install the piston rings. a) Install the expander and the two oil ring scrapers.

b) Using the piston ring installation expander, install the two compression rings, making sure the ring marks face upward as shown in the illustration. Mark code:

4A-FE, 7A-FE:

compression ring No. 2. ..... 2R or T

4A-GE:

compression ring No. 1 ..... 18 or T

compression ring No. 2 ..... 2R or 21

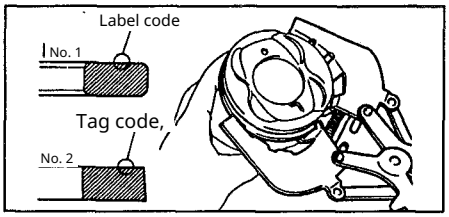

c) Install the piston rings in the grooves so that their gaps are positioned as shown in the figure. Note: do not align the gaps rings.

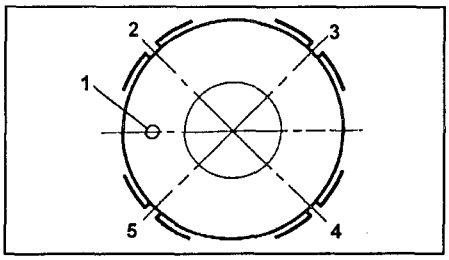

4A-FE, 7A-FE. 1 - mark "front", 2 - upper scraper of the oil-control ring, 3 - lower compression ring, 4 - lower scraper of the oil-control ring, 5 - upper compression ring and expander of the oil-control ring.

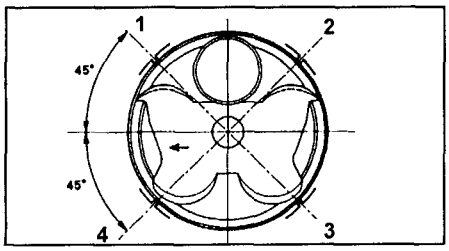

4A-GE. 1 upper scraper of the oil control ring, 2 - upper compression ring (No. 1), 3 lower scraper of the oil control ring, 4 lower compression ring (No. 2)

3. Install the connecting rod bearing inserts.

a) Align the tab of the insert with the recess in the lower big end of the connecting rod and its cap.

b) Insert the bearing inserts into the lower big end of the connecting rod and into the connecting rod cap.

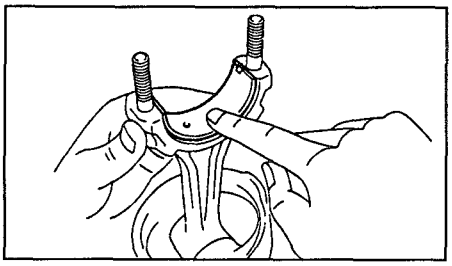

Engine block assembly

Note:
- Thoroughly clean all parts intended for assembly.
- Before assembly, coat all parts that form rotating or sliding assemblies with fresh engine oil.
- Replace all gaskets, O-rings, and oil seals with new ones. 1. (4A-GE) Install the oil nozzles.

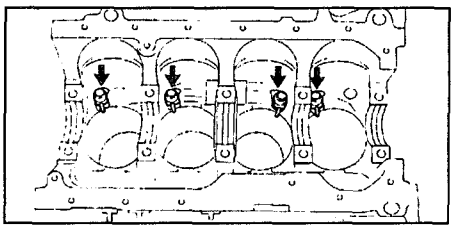

2. Install the main (connecting) bearings bearings.

a) Align the tabs of the upper bearing shells with the recesses (depressions) in the cylinder block bearing seats and insert the shells. b) Align the tabs of the lower bearing shells with the recesses (depressions) in the main bearing caps and install them. Note: each main bearing cap is numbered.

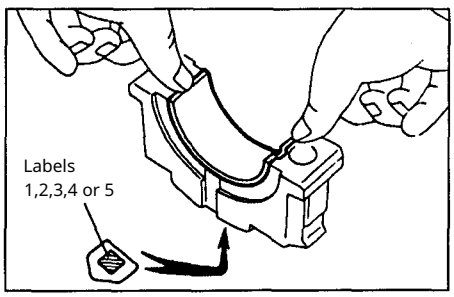

3. Install the upper thrust half-rings into the main bearing journal No. 3 with the oil grooves facing outward.

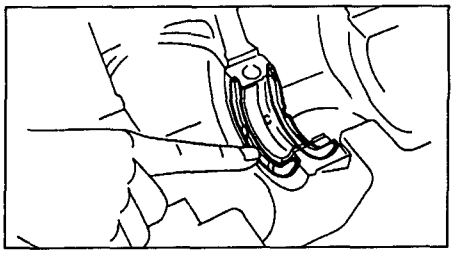

4. Place the crankshaft into the engine block — cylinder.

5. Install the main bearing caps and thrus t half-rings.

a) Install the two thrust half-rings on bea ring cap No. 3, orienting the oil grooves outward.

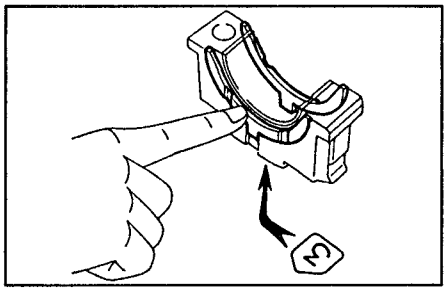

b) Install the five main bearing caps. Not e: each bearing cap is numbered and has a "front" mark.

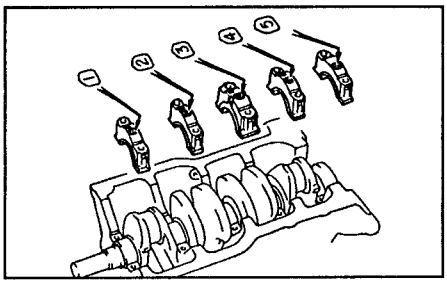

e) Apply a thin layer of engine oil to the t hreads and under the heads of the bolts that secure the main bearing caps.

f) Install and evenly tighten the main b earing cap bolts in several passes in the sequence shown in the figure. Tighteni ng torque: 4A-FE, 7A-FE.

..... 60 N·m

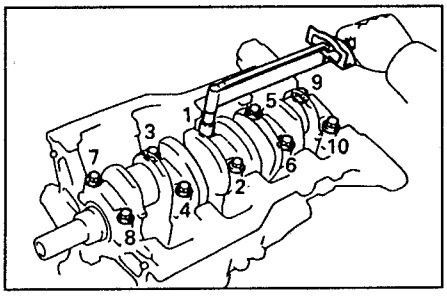

g) With the bolt threaded in and using a t orque wrench, check that the turning eff ort of the crankshaft is less than 20 N·m and that the shaft turns smoothly.

h) Using a dial indicator, measure the axial play of the crankshaft by moving the crankshaft with a screwdriver. (se e above).

If the axial clearance exceeds the maximum, r eplace the thrust half\ nockets.

6. Install the piston and connecting rod assembly.

a) Fit pieces of hose over the threaded port ions of the connecting rod bolts to prevent damage to the crankshaft journals.

b) Using a ring-compressing tool, install th e piston assemblies into the cylinders acco rding to their numbers, orienting the "fron t" marks on the pistons toward the front of the engine, as shown in the illustration.

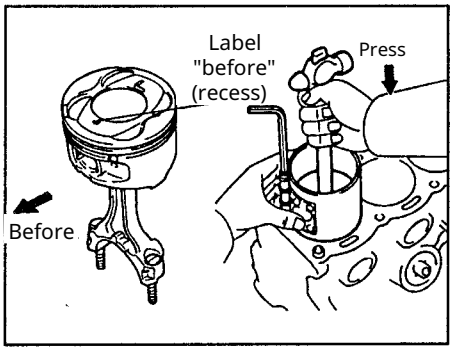

7. Install the lower caps of the connecting rods.

A. Install the connecting rod caps.

a) Check that the numbering of the bearing c aps and the connecting rods matches.

b) Install the connecting rod caps so that the "front" marks face the front of the engine.

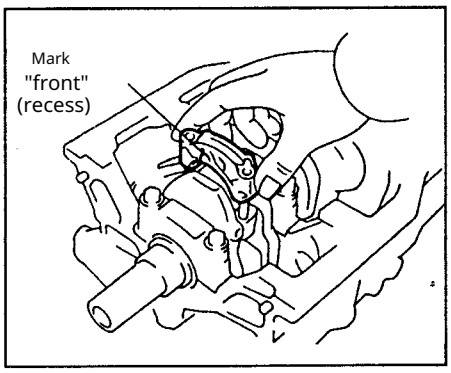

B. Install the nuts on the connecting rod b olts (or tighten the bolts on the 7A-F E). Note:

- The nuts are tightened in two stages. If
- any of the connecting rod bolts is brok en or deformed, replace it.

a) Apply a film of engine oil to the thread s of the bolts, under the nuts of the conn ecting rod caps, or under the bolt he ads. b) Perform an initial tightening of th e nuts (bolts) of the connecting rod caps evenly, in several passes. Tighteni ng torque:

4A-FE, 4A-GE..... 30 Н·м
7A-FE..... 25 N·m

If any nut (bolt 7A-FE) does not tighten to the specified torque, replace the bolt and nut.

c) Mark the bolts and nuts with paint (or the bolt head), as shown in the figure.

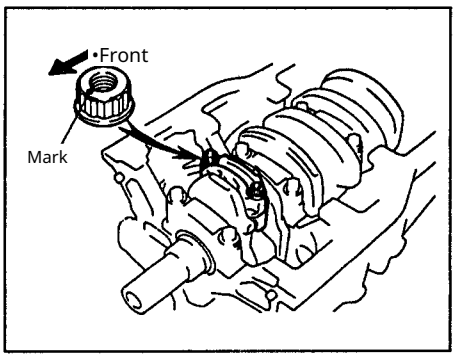

d) Tighten the nuts (bolts) an additional 90° as shown in the figure.

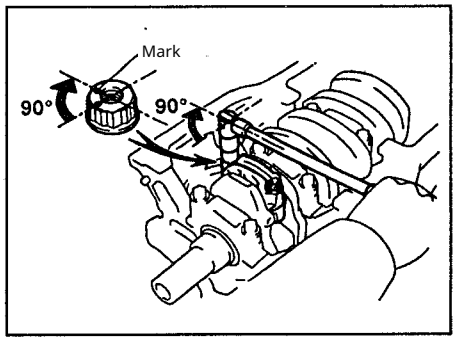

d) Make sure the marks on the nuts (bolts) are now positioned at 90° relative to the mark on the connecting rod bolts.

e) Check that the crankshaft rotates smoot hly and that the turning moment does not exceed 120 N·m.

f) Using a dial indicator, measure the axial clearance by moving the connecting rod back and forth. (see above.)

If the axial clearance exceeds the maximum, replace the connecting rod assembly. If necessary, replace the crankshaft.

8. Install a new gasket and the rear oil seal ret ainer, tightening the bolts.

Tightening torque..... ..... 8 N·m

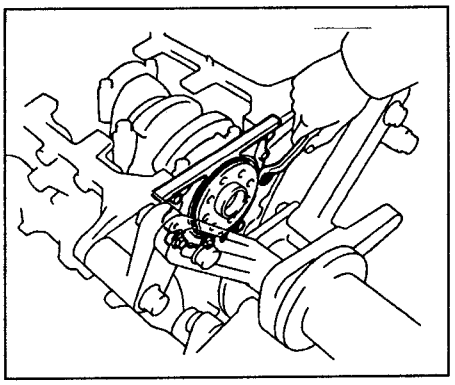

Cooling system

Coolant pump

coolant

Removal and installation

4A-FE, 7A-FE

See also the section "Timing drive belt Timing" of the chapter "Engines 4A-FE and 7A-FE". 1. Disconnect the negative terminal from the battery. 2. Drain the coolant. 3. Remove the timing drive belt. 4. Remove the power steering pump and the adjustment bar by unscrewing 3 mounting bolts. 5. Remove the oil dipstick with its guide.

6. Remove the wiring harness cover.
7. Remove the coolant pump together with the inlet pipe by unscrewing 3 bolts and 2 mounting nuts.

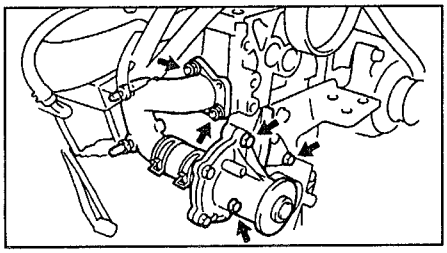

8. Disconnect the mounting clamps and remove the inlet pipe.

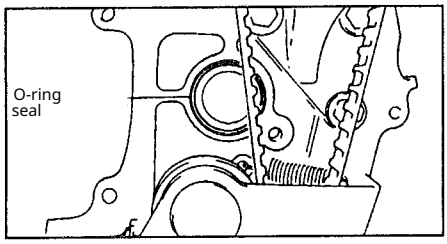

Note: The coolant pump is installed in the reverse order of removal; when installing, fit a new O-ring seal into the block. 4A-GE

See also the "Timing Belt" section of the Engine chapter for "4A-GE".
1. Disconnect the negative terminal from the battery.
2. Drain the coolant. 3. Remove the timing belt. 4. Remove the oil dipstick from the guide.

5. Remove the adjusting bar by unscrewing the 3 mounting bolts.
6. Remove the coolant pump.

Note: The coolant pump is installed in the reverse order of removal; when installing, fit a new O-ring seal into the block.

Inspection

1. Check the coolant pump.

Check that the coolant pump bearing runs smoothly and without noise. If necessary, replace the pump.
Replace the pump.

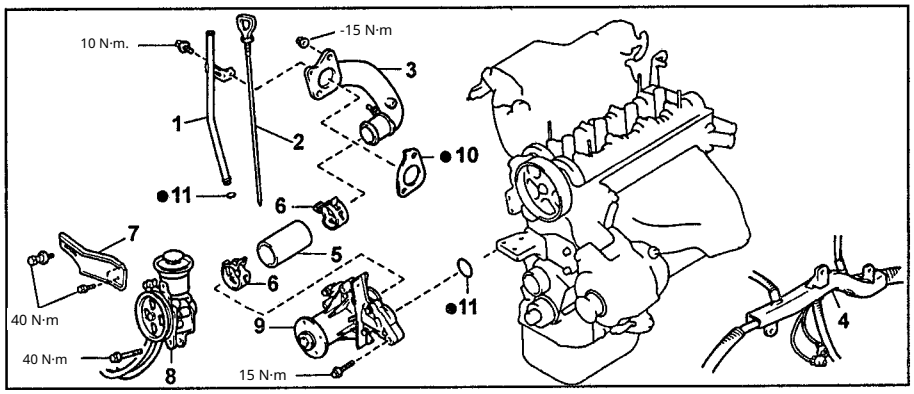

Removal and installation of the coolant pump (4A-FE, 7A-FE). 1 - oil dipstick guide, 2 - oil dipstick, 3 - coolant inlet pipe, 4 - wire harness protector, 5 - coolant hose, 6 - clamp, 7 - adjusting bar, 8 - power steering pump, 9 - coolant pump, 10 - gasket, 11 - O-ring seal.

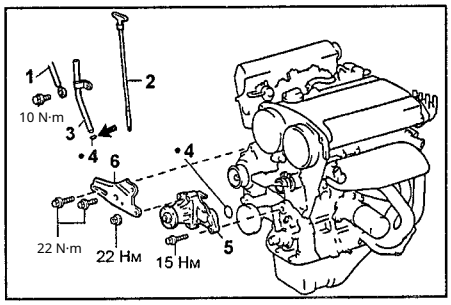

Removal and installation of the coolant pump (4A-GE). 1 - ground wire, 2 - oil dipstick, 3 - oil dipstick guide, 4 - O-ring seal, 5 - coolant pump, 6 - adjustment bar.

Check that the coolant pump bearing runs smoothly and without noise. If necessary, replace the pump.
Replace the pump.
2. Check that the viscous coupling is not damaged and that there are no leaks from it. If necessary, replace the pump.

Thermostat

Note:
- Do not remove the thermostat unless it is necessary.
- When removing the thermostat the engine tends to become overcooled, so you should not remove the thermostat even if the engine is overheating. The optimal operating temperature of the engine is about 95°C. Removal

1. Drain the coolant.
2. Remove the thermostat.
a) Unscrew the two mounting nuts and disconnect the intake hose from the coolant pump. b) Remove the thermostat.
c) Remove the gasket from the thermostat.

Installation

1. Install the thermostat into the inlet pipe.
a) Fit a new gasket onto the thermostat.

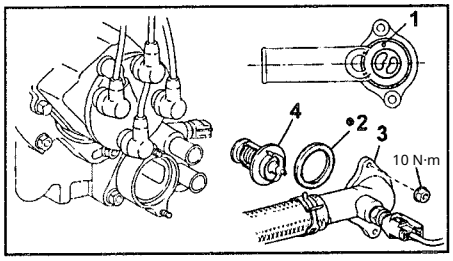

1 - bypass valve, 2 - gasket, 3 - coolant inlet pipe, 4 - thermostat.

b) Align the thermostat bypass valve with the projection on the inlet pipe.
2. Install the inlet pipe and tighten the two nuts.
3. Fill with coolant.
4. Warm up the engine and check for leaks.

Inspection

1. Inspect the thermostat. Note: as a rule, numbers indicating the valve opening temperature are stamped on the thermostat housing.

a) Submerge the thermostat in water and heat it slowly.
b) Check the thermostat valve opening temperature.
Valve opening temperature: 80 - 84°C
Maximum allowable opening temperature.....95°C ..... 95°C
If the valve opening temperature does not conform, replace the thermostat.
c) Check the valve lift.
Valve lift....8.0 mm .....
If the valve opening temperature does not match the specification, replace the thermostat.
c) Make sure that with a cold thermostat the valve is held closed by the spring. Otherwise, replace the thermostat.

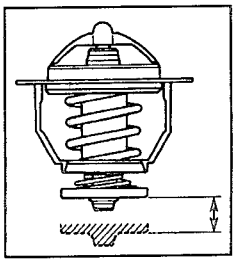

Radiator cleaning

Flush the radiator with a jet of water from a hose under pressure to remove dirt from its core.

Note: If the water pressure at the hose outlet exceeds 30–35 bar, keep the spray nozzle 40–50 cm away from the radiator to avoid damaging it.

Radiator inspection 1. Remove the radiator cap. Caution: On a hot engine, perform this operation carefully to avoid burns from a jet of hot

water or steam.

2. Check the radiator cap using a radiator tester. Note:

- If there are traces of liquid and/or foreign deposits remaining on the cap, wash and blow out the cap.
- When performing the tests described below, hold the radiator tester fitted to the radiator cap at an angle of at least 30° to the horizontal, as shown in the illustration.

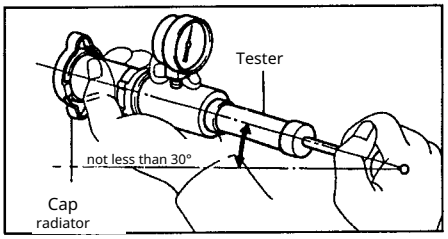

Evenly and slowly (one stroke of the tester piston in 3 seconds or more) while moving the tester piston, create pressure on the radiator cap's steam valve and make sure that the valve opens under air pressure. Otherwise, replace the radiator cap.

Valve opening pressure:

rated..0.75 - 1.05 bar minimum allowable ..0.6 bar If the valve opening pressure is below the minimum, replace the radiator cap.

Make sure that the gauge reading on the tester does not drop too quickly when the pressure falls below 0.6 bar; this indicates a leak

valve movement.

3. Inspect the cooling system for leaks:

a) Fill the system with coolant and connect the tester with a hose to the radiator filler neck as shown in the illustration.

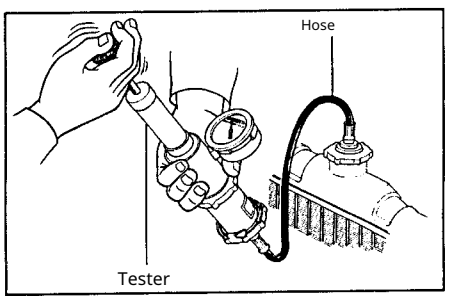

b) Warm up the engine.

c) Using the tester, create a pressure of 1.2 bar in the system and make sure that the pressure does not drop.

Make sure that the pressure does not drop. If the pressure falls, check the hoses, radiator, and coolant pump for leaks.

If no leaks are found, check the condition of the radiator core, the engine block, and the cylinder head. 4. Install the radiator cap.

Cooling system electric fan

Cooling system On-engine inspection

1. Check the operation of the cooling system electric fan of the cooling system when the engine operating temperature does not exceed 83° C. a) Turn the ignition on.

b) Make sure that the cooling system electric fan is not rotating. If it is rotating, check the cooling fan relay and the coolant temperature switch sensor, and also inspect the connectors and the wiring between them.

c) Disconnect the connector of the coolant temperature sensor/switch No. 2.

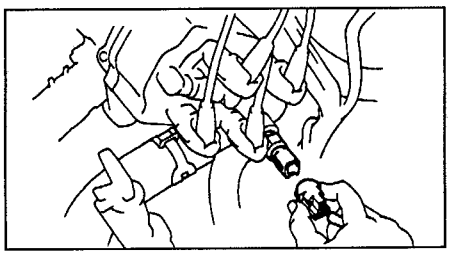

4A-FE, 7A-FE.

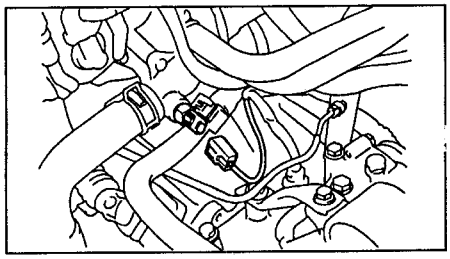

4A-GE.

c) Make sure the cooling system fan is rotating.

If it is not, check the electric fan relay, the electric fan, the engine main relay, and also check for a short circuit in the circuit between the relay and the coolant temperature switch.

d) Reconnect the connector of the coolant temperature switch.

2. Check the operation of the cooling system fan when the engine operating temperature exceeds 93°C.

a) Start the engine and warm it up until the coolant temperature exceeds 93°C.

6) Make sure the cooling system fan is rotating. If it does not, replace the coolant temperature switch.

Cooling fan inspection Note: Depending on the design, two cooling system electric fans may be installed.

1. Disconnect the cooling fan connectors.

2. Check the cooling fan.

a) Connect the battery and an ammeter to the cooling fan connector. b) Check that the fan rotates smoothly and record the ammeter reading.

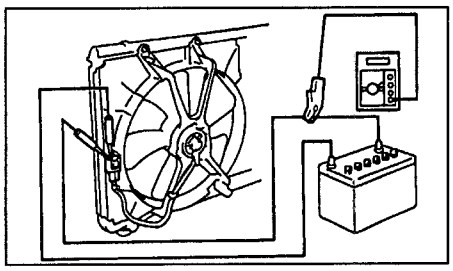

After confirming the fan rotates freely, record the ammeter reading.

Rated current:

4A-FE, 7A-FE.. ..... less than 10 A

4A-GE:

Manual transmission (MT) ..... 3.2–4.4 A

AKPP (automatic transmission) ..... 5.8–7.4 A

Checking sensors and relays

Main engine relay

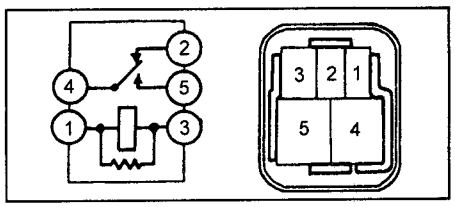

1. Measure the resistance between the relay terminals.

Rated resistance:

between terminals "1" and "3" ... 60 - 90 ohms

between terminals "2" and "4". .....0 ohm

between terminals "4" and "5". ..... ∞ ohm

2. Apply voltage from the battery to terminals "1" and "3" of the relay and verify there is continuity between terminals "4" and "5", and no continuity between terminals "2" and "4".

Electric fan relay

1. Measure the resistance between the relay terminals.

Rated resistance:

between terminals "1" and "2". .. 50–80 ohms

between terminals "3" and "4". ..... 0 Ω

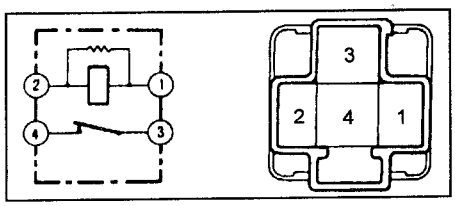

2. Apply voltage from the battery to terminals "1" and "2" of the relay and make sure there is no conductivity between terminals "3" and "4".

Lubrication system

Checking tire pressure

oil

1. Check the engine oil level. 2. Disconnect the cable from the negative terminal of the battery.

3. Perform the following operations:

(4A-FE, 7A-FE)

a) Disconnect the connector of the oil pressure sensor.

b) Unscrew the oil pressure sensor and install a pressure gauge in its place.

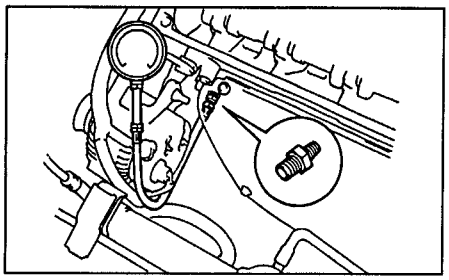

4A-GE and 7A-FE.

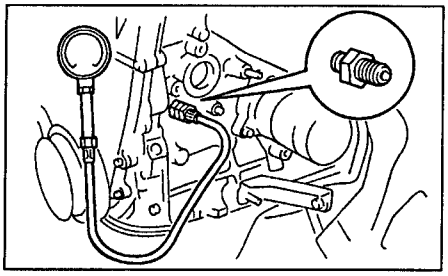

4A-GE.

(4A-GE)

a) Remove the power steering pump bracket. b) Unscrew the oil pressure sensor and install a pressure gauge in its place. 4. Warm up the engine to operating temperature.

5. Check the oil pressure.

Oil pressure:

4A-FE, 7A-FE:

idle speed ..... 0,5 kg/cm²

5000 rpm ..... 3.0 kg/cm²

4A-GE:

idle speed ..... 0.6 kg/cm²

5000 rpm ..... 3.0 kg/cm²

6. Remove the pressure gauge and install the oil pressure sensor.

a) Remove the pressure gauge (after removing the components as shown above).

b) Apply thread-sealant adhesive to two to three turns of the pressure sensor thread sensor.

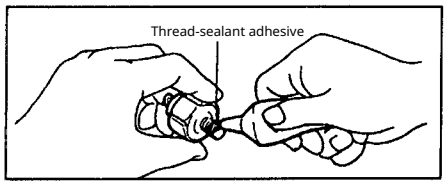

c) Install the emergency oil pressure sensor oil pressure.

d) Install the oil pressure sensor.

Tightening torque..... ..... 15 Н·м

7. Perform the following operations:

(4A-FE, 7A-FE)

Connect the connector of the oil pressure sensor.

(4A-GE)

Install the power steering pump bracket.

8. Connect the wire to the negative terminal of the battery.

Oil pump and oil pan

(4A-FE, 7A-FE)

Removal

1. Drain the engine oil. 2. (7A-FE) Remove the left part of the engine shield.

3. Remove the timing belt. 4. (7A-FE) Remove the adjusting plate by unscrewing 3 mounting bolts.

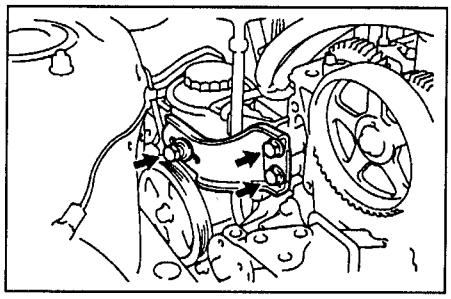

5. (4A-FE, 7A-FE) Disconnect the crankshaft position sensor connector. 6. Remove the oil dipstick from its guide by undoing the mounting bolt. 7. (4A-FE, 7A-FE) Remove the crankshaft position sensor.

Remove the crankshaft position sensor.

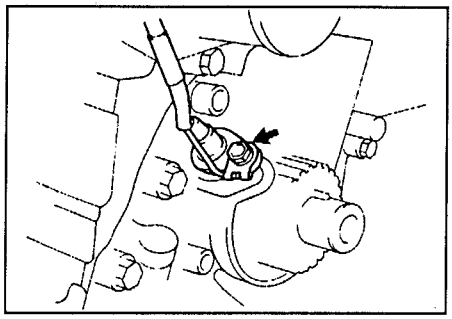

8. Remove the crankshaft timing gear pulley.

crankshaft.

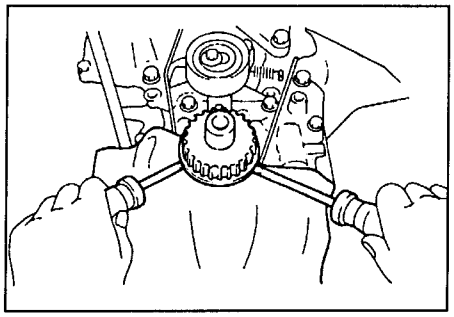

9. Install the engine lifting hook

For No. 1.

Tightening torque. ..... 28 Н·м

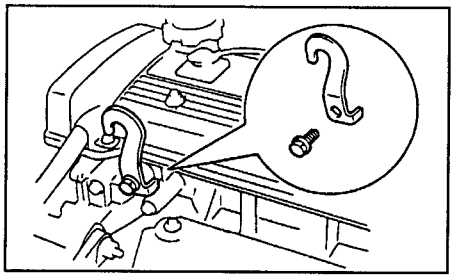

10. Remove the timing belt tensioner pulley.

11. (4A-FE) Remove the exhaust pipe with catalytic converter.

12. (7A-FE) Remove the exhaust pipe.

a) Disconnect the intake pipe from the catalytic converter by unscrewing 2 bolts and 2 nuts.

Unscrew 2 bolts and 2 nuts.

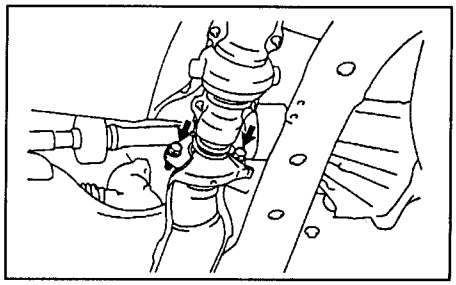

b) Unscrew 2 nuts and remove the mounting bracket.

b) Unscrew the three nuts and remove the exhaust system's inlet pipe.

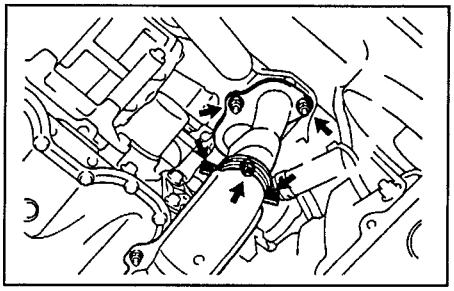

13. Remove the center beam.

a) Remove the caps.

b) Unscrew the 3 bolts and remove the shock absorber.

c) Unscrew the 4 bolts and remove the center beam.

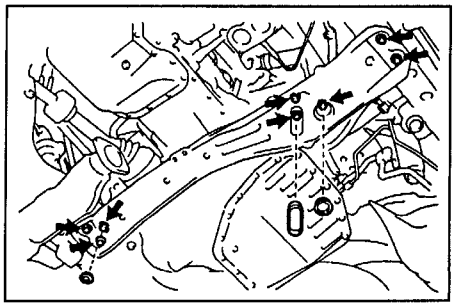

14. (4A-FE) Remove the stiffening

stiffener

don.

a) Unscrew 19 bolts and 2 nuts.

b) Insert a sharp blade between the mating surfaces of the cylinder block and the oil pan, cut the gasket, and remove the pan.

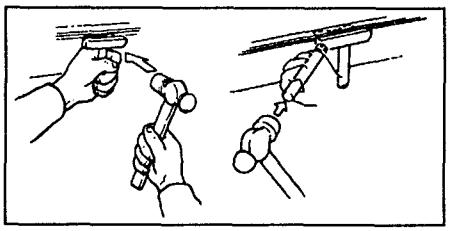

Notes:
- Be careful not to damage the oil pan flange.
- Do not use this method when removing the oil pump and the tailshaft seal retainer of the crankshaft.

crankshaft.

16. (7A-FE) Remove the lower part of the oil pan.
a) Unscrew the 13 bolts and 2 nuts of the fastenings.

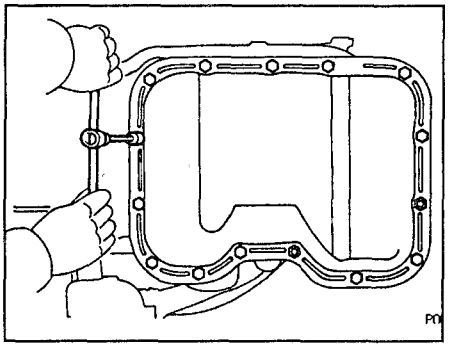

b) Insert a sharp blade between the mating surfaces of the cylinder block and the pan, cut the gasket and remove the pan.

Notes:
- Be careful not to damage the oil pan flange.
- Do not use this method when removing the oil pump seal retainer the tailpiece and crankshaft.

17. (7A-FE) Remove the oil baffle by loosening 2 nuts and 2 bolts.

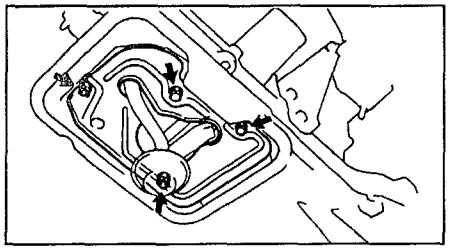

18. (4A-FE) Remove the oil pickup with the mesh strainer by loosening 2 bolts and 2 nuts.

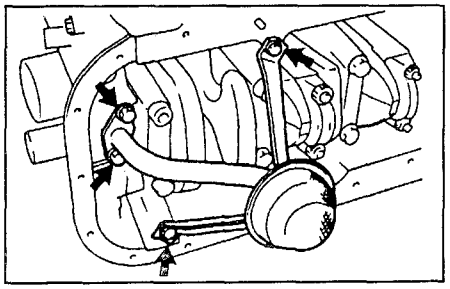

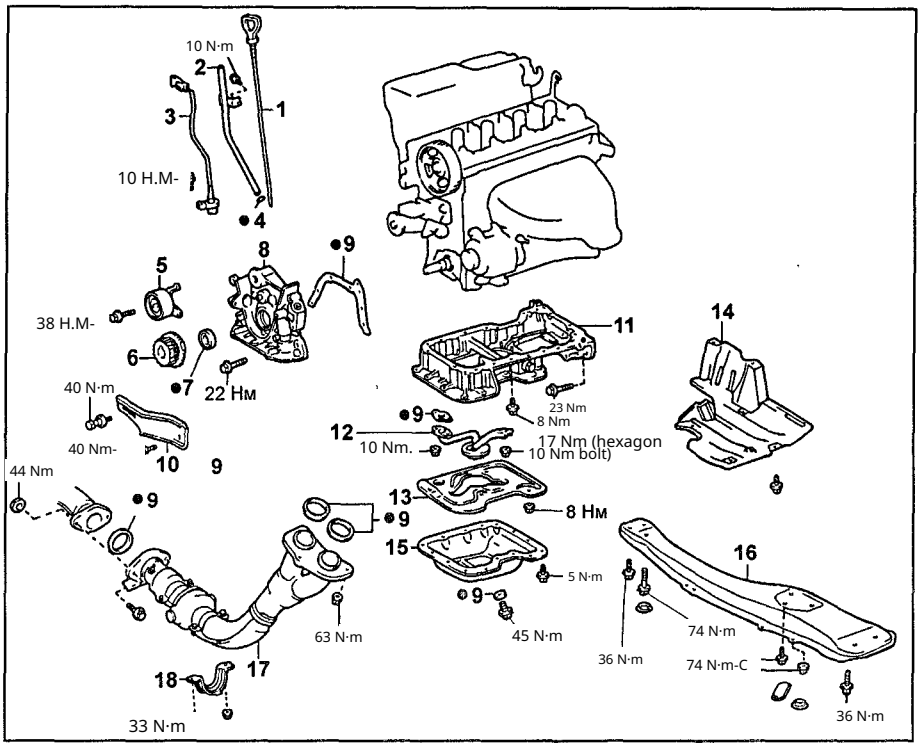

Removal and installation of the oil pan and oil pump (7A-FE). 1 - oil dipstick, 2 - oil dipstick guide, 3 - crankshaft position sensor, 4 - O-ring, 5 - timing belt tensioner roller, 7 - oil seal, 8 - oil pump, 9 - gasket, adjustment shim, 11 - Upper part of the oil pan, 12 - oil pickup, 13 - oil baffle, 14 - left engine splash shield, 15 - lower part of the oil pan, 16 - center beam, 17 - exhaust system inlet pipe, 18 - bracket.

19. (7A-FE) Remove the oil pickup with the mesh filter by loosening the 3 nuts.

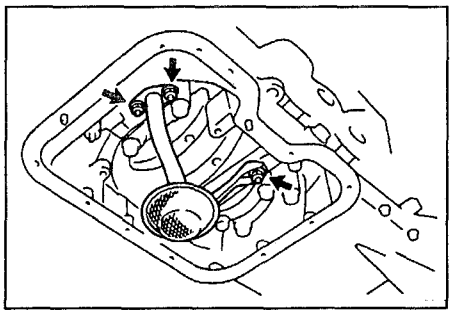

20. (7A-FE) Remove the upper part of the oil pan.
a) Unscrew the 3 bolts securing the upper part of the oil pump to the transmission housing.
b) Unscrew the 6 bolts.
c) Using a special tool, unscrew 14 bolts and remove the upper part of the oil pan.

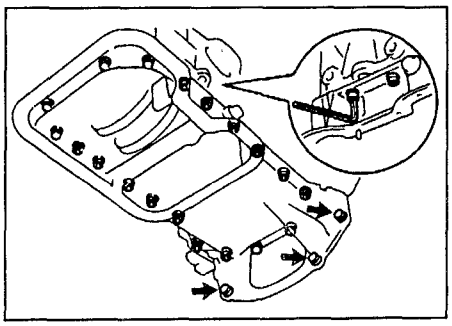

c) If the upper part of the oil pan does not come off, use a screwdriver as a lever, as shown.

Use a screwdriver as a lever, as shown in the illustration.

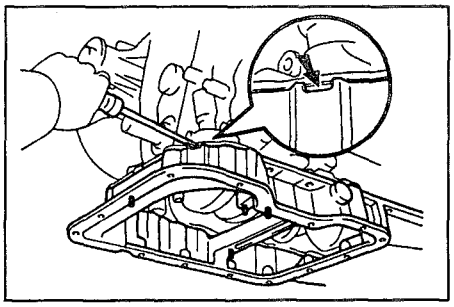

21. Remove the oil pump. a) Unscrew 7 bolts. b) (4A-FE) Using a plastic hammer, remove the stiffening bracket, then remove the oil pump.

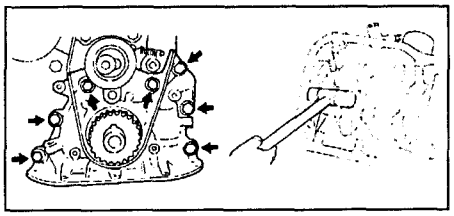

Installation

1. Install the oil pump. a) Place a new gasket on the cylinder block surface that mates with the oil pump housing. b) Align the keyway of the pump drive rotor with the large key on the crankshaft and mount the pump onto the shaft, as shown in the illustration.

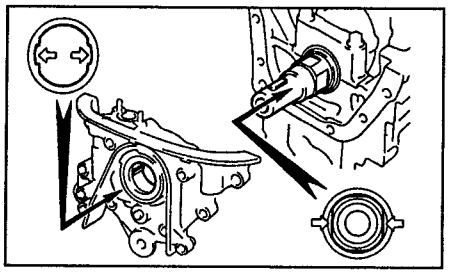

c) Tighten the 7 mounting bolts. Tightening torque.....21 N·m 2. (7A-FE) Install the upper part of the oil pan.

a) Remove the old sealant from the surfaces of the oil pan-to-engine block joint, taking care not to damage the surfaces of the oil pan and the cylinder block; clean the contact surfaces with a solvent. Note: do not use a solvent that may damage painted surfaces.

6) Apply fresh sealant to the surface of the oil pan as shown in the illustration.

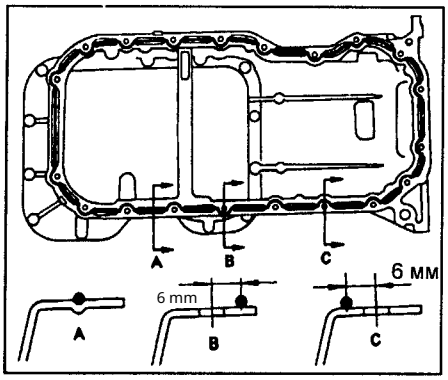

Notes:

- The nozzle opening of the tube should produce a bead of sealant with a diameter of 3–5 mm when extruded.
- Parts must be joined within 5 minutes after applying the sealant; otherwise

The sealant must be removed and Note: do not use dissolv-
freshly applied.
- After finishing the application of the sealant, the tube nozzle must be removed and cleaned of sealant residue, and the tube tightly closed.

b) Tighten the 14 mounting bolts.
Tightening torque.....17 N·m.....

c) Tighten the 6 mounting bolts (hexagon socket).
Tightening torque... ..... 8 N·m

d) Tighten the 3 mounting bolts to the transmission housing.
Tightening torque. .....23 N·m

3. (4A-FE, 5A-FE) Install the oil pickup with a new gasket, tightening 2 mounting bolts and 2 mounting nuts.
Tightening torque..... .....10 Н·м

4. (7A-FE) Install the oil pickup with a new gasket, tightening 3 mounting nuts.
Tightening torque. .....10 Н·м

5. (7A-FE) Install the oil baffle by threading in 2 bolts and 2 nuts.
—leniya.
Tightening torque. .....8 N·m

6. (7A-FE) Install the lower part of the oil pan.

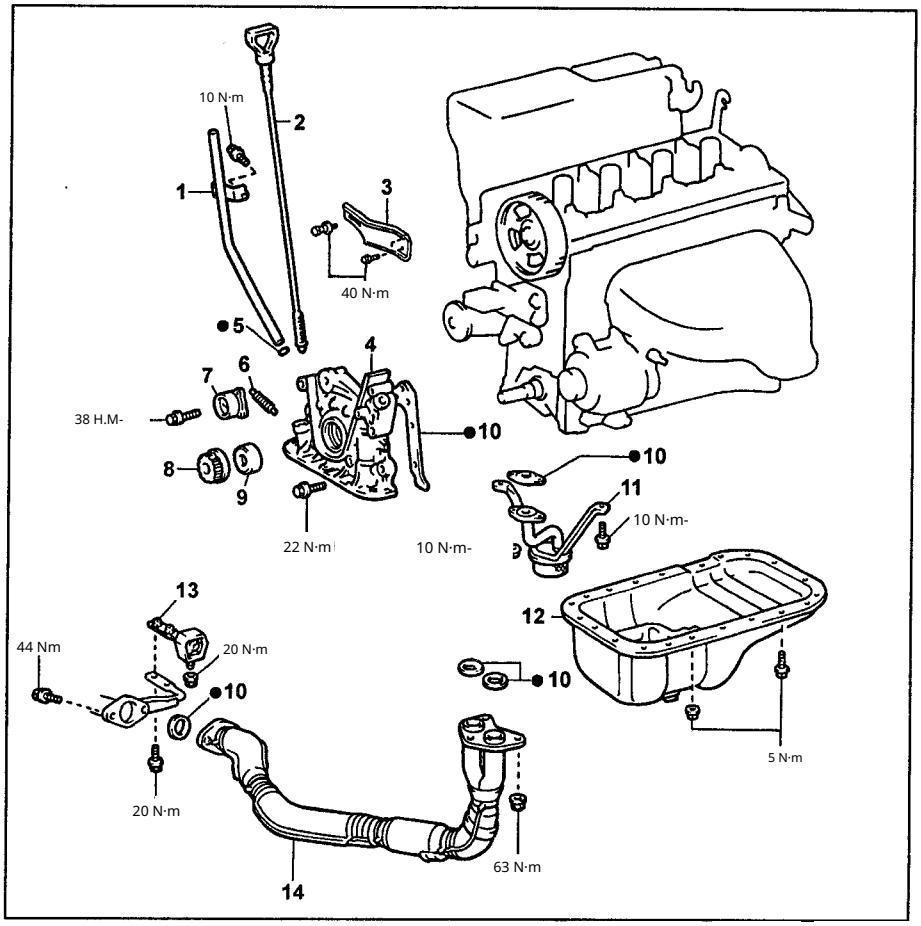

Removal and installation of the oil pan and oil pump (4A-FE). 1 - oil dipstick guide, 2 - oil dipstick, 3 - adjusting bar, 4 - oil pump, 5 - O-ring, 6 - tensioner roller spring, 7 - tensioner roller, 8 - crankshaft timing pulley, 9 - oil seal, 10 - gasket, 11 - oil pickup, 12 - oil pan, 13 - bracket for exhaust pipe No. 1, 14 - exhaust front pipe.

9 - - I -

a) Remove the old sealant from the surfaces of the oil pan joints, while trying not to damage them, clean the contact surfaces with a solvent.

a solvent that may damage painted surfaces.

b) Apply fresh sealant to the oil pan surface as shown in the figure, similar to the upper part of the oil pan.

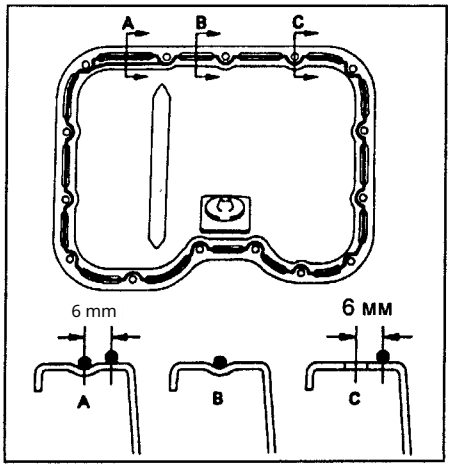

b) Thread in the 13 mounting bolts. Tightening torque: 5 N·m
.....

7. (4A-FE) Install the oil pan.

a) Remove the old sealant from the mating surfaces of the pan and the block, taking care not to damage the surfaces of the pan and the cylinder block; clean the contact surfaces with a solvent. Note: do not use a solvent that may damage painted surfaces.

b) Apply fresh sealant to the surface of the oil pan as shown in the illustration.

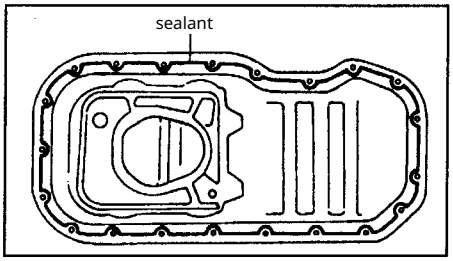

Notes:

- The opening in the tube must provide an extrusion diameter of the sealant of 3 - 5 mm.
- The parts must be joined within 5 minutes after application of the sealant; otherwise the sealant must be removed and fresh sealant applied.

• After finishing application of the sealant, the tube nozzle must be removed and cleaned of sealant residue, and the tube tightly closed.
b) Tighten 2 nuts and 19 mounting bolts.
Tightening torque.. .....5 N·m
8. (4A-FE) Install the reinforcement stiffener.
a) Install the reinforcement and temporarily tighten bolt "A".
b) Tighten the bolts in the following order: "B" - "A" - "C" - "D" - "E".
Tightening torque.. .....23 Н·м

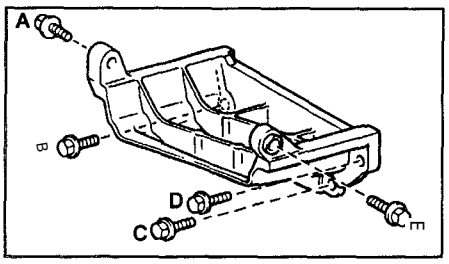

9. Install the center beam.
a) Screw in the 7 mounting bolts.
Tightening torque:
body mounting bolt.. .....36 N·m
mounting bolt of the shock absorber.. .....74 N·m
b) Install the plugs.
10. (4A-FE) Install the exhaust system front pipe with the catalytic converter.
a) Install the front pipe and mounting bracket No. 1.
6) Install a new gasket and connect the front pipe to the manifold by tightening 3 nuts. Tightening torque... .....63 N·m
c) Install a new gasket and connect the pipe containing the catalytic converter to the rear exhaust pipe by tightening the bolt and nut.

—leniya.

Tightening torque: 44.N·m d) Install the oxygen sensor with a new gasket.

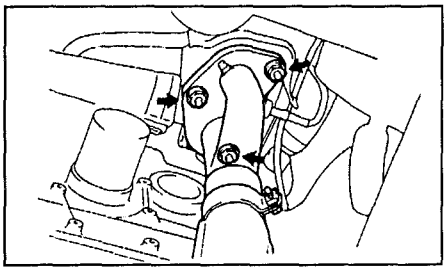

11. (7A-FE) Install the exhaust system inlet pipe.
a) Install the intake pipe with a new gasket and tighten the 3 mounting nuts.
Tightening torque... .....0.63 N·m
b) Install the mounting bracket by tightening 2 mounting nuts.
Tightening torque... .....0.33 N·m b) Install a new gasket and connect the inlet pipe to the pipe with the catalytic converter installed in it, securing with 2 bolts and 2 nuts. Tightening torque .... 0.44 N·m
12. Remove the engine lifting hook.

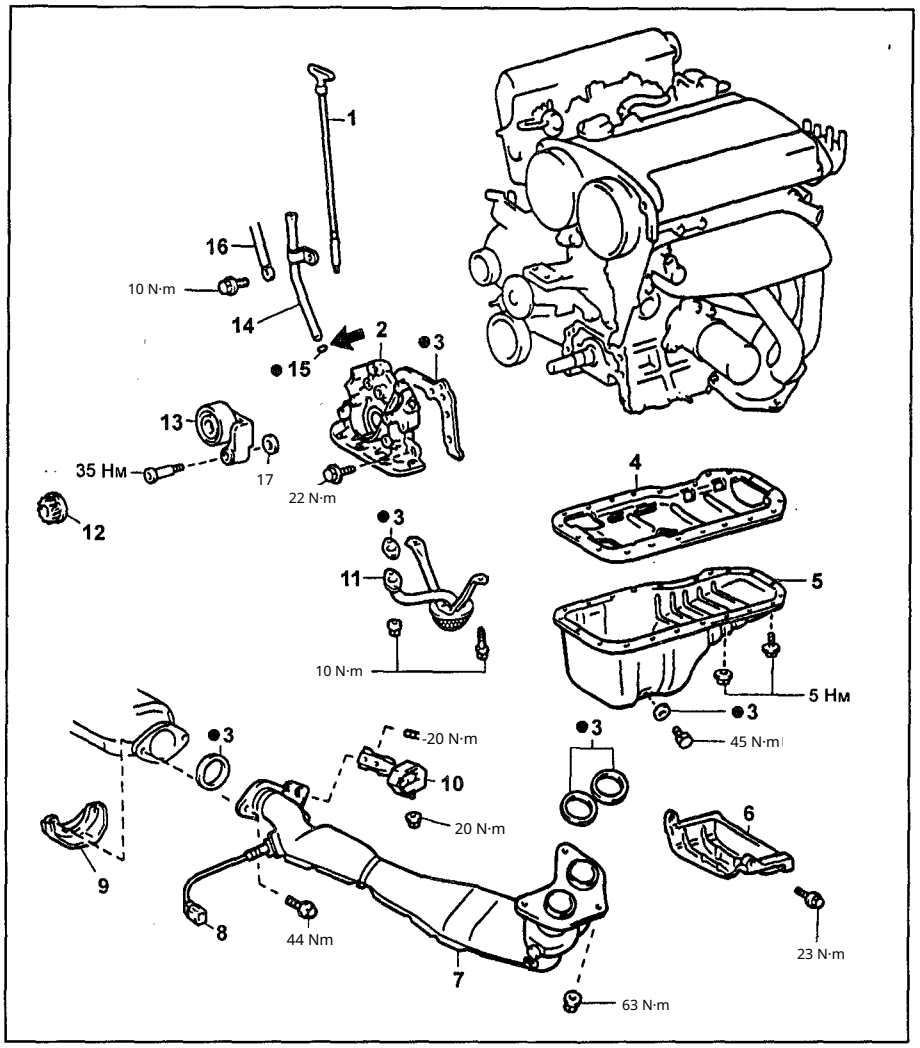

Removal and installation of the oil pan and oil pump (4A-GE). - dipstick, 2 - oil pump, 3 - gasket, 4 - oil baffle, 5 - oil pan, 6 - stiffening brace, 7 - exhaust system inlet pipe, 8 - oxygen sensor connector, 9 - bracket, 10 - bracket, 11 - oil pickup, 12 - crankshaft timing pulley, 13 - timing belt tensioner, 14 - dipstick guide, 15 - O-ring seal, 16 - cable, 17 - washer.

13. Install the timing belt. tensioner pulley

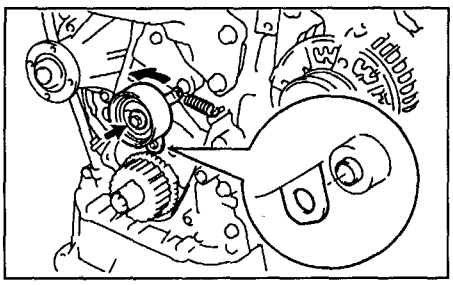

14. Install the crankshaft timing pulley.
15. (4A-FE, 7A-FE) Install the sensor 16. Install the oil dipstick and guide, tightening the mounting bolt
position of the crankshaft.
mounting.
Tightening torque ..... 10 N·m 17. Install the timing belt. 18. Install the left part of the engine guard.
19. Fill the system with oil. 20. Start the engine and check for no oil leaks.
21. Check the oil level.

Oil pump and oil pan (4A-GE)

Removal
1. Drain the oil from the engine.
2. Remove the timing belt (see the "Timing Belt" section of the "4A-GE Engine" chapter).
3. Install the engine lifting hook by tightening the 2 mounting bolts. Tightening torque.. ..... 22 N·m
4. Hang the engine.
a) Remove the hood.
b) Using a hoist, lift the engine.
c) Place the jack under the oil pan.
5. Disconnect the intake pipe of the system-injection topics.
6. Remove the stiffening brace by unscrewing the 5 mounting bolts.
7. Remove the oil pan.
a) Unscrew the 19 bolts and 2 nuts.
b) Insert a sharp blade between the mating surfaces of the cylinder block and the oil pan, cut the gasket, and remove the oil pan.

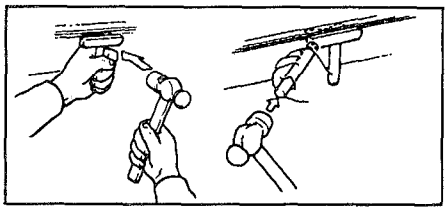

Notes:
- Be careful not to damage the oil pan flange.
- Do not use this method when removing the oil pump and the dr- resident of the crankshaft oil seal.

18. Remove the oil intake with the mesh filter by unscrewing 2 bolts and 2 nuts.
19. Remove the timing belt drive tensioner.
20. Remove the crankshaft timing pulley of that shaft.
21. Remove the oil dipstick from the guide.
22. Remove the oil pump.

Installation

1. Install the oil pump. a) Place a new gasket on the surface of the cylinder block that mates with the o il pump housing. b) Align the keywa y of the pump drive rotor with the large key of the crankshaft and mount the p ump onto the shaft as shown in the illu stration.

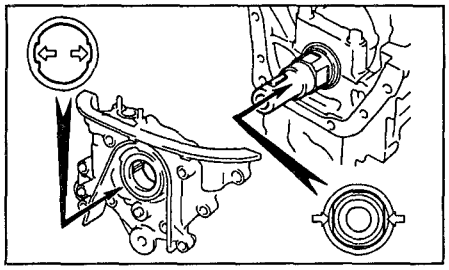

c) Tighten the 7 mounting bolts.
Tightening torque.... .....21 Н·м
Note: the mounting bolts differ in length: "A " - 35 mm, "B" - 25 mm.

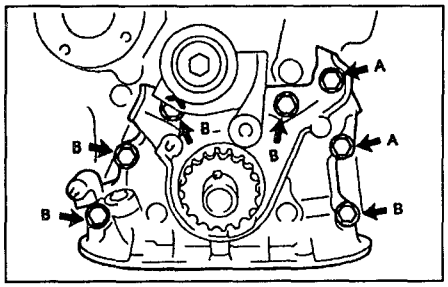

2. Install the timing belt tensioner. 3. Install th e oil pickup with a new gasket, tighte ning 2 bolts and 2 nuts of the fasteners.
Tightening torque. .....10 Н·м
4. Install the oil pan. a) Remove the old sealant from the mating surfaces o f the pan and block, taking care not to d amage the surfaces of the pan and the cylinder block; clean the contact surfac es with a solvent. Note: do not use a sol vent that can damage p ainted surfaces.

b) Apply fresh sealant to the surface of th e oil pan as shown in the illustration.

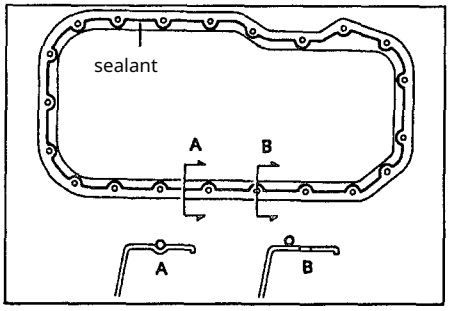

Notes:
- The opening in the tube must provide an extrusion diameter of the sealant of 3 - 5 mm.
- The parts must be joined within 5 minutes after applying the sealant; otherwise the se alant must be removed and fresh sealant ap plied.
- After applying the sealant, the tube nozzl e must be removed and cleaned of sealant traces, and the tube tightly closed. c) Tigh ten the 2 nuts and the 19 mounting bol ts.

Tightening torque ..... 5 N·m
5. Install the stiffening brace. a) Install the stiffening brace and temporarily tig hten bolt "A". b) Tighten the bolt s in the following sequence: "B" - "A" - "C " - "D" - "E". Tightening torque ..... 23 N·m

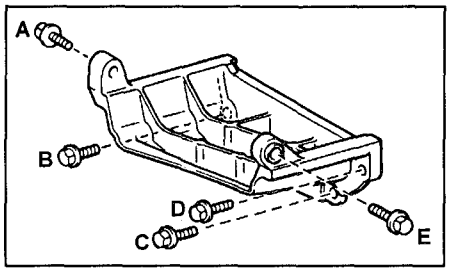

6. Install the exhaust system intake pipe.
7. Install the timing drive belt.

Oil pump

For replacement of the front crankshaft oil seal, see the chapter on the crankshaft in "Engine - general repair procedures", section "Cylinder Block ". 1. Install the driving and driven gears.

Disassembly

1. Remove the relief valve, after REMOVING the stop, by taking out the retaining ring, springs and spring.
2. Remove the drive and driven rotors, by unscrewing the screws and removing the housing cover and O-ring.

Inspection

1. Inspect the relief valve. By lubrica ting the valve surface with fresh engine oil, install it into the seating bore and e nsure that the valve descends under its own weight.

If this does not occur, replace the valve or the entire oil pump.

2. Check the drive and driven rotors.

Check the size of the following clearances:

- Radial clearance between the driven rotor and the housing:
  nominal ..... 0.080 - 0.180 mm
  maximum
  allowable... ..... 0.200 mm

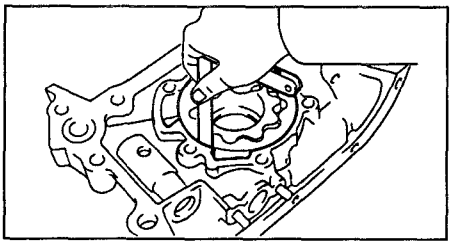

• Radial clearance between the protrusions of t he driving and driven rotors: nominal 0.06 0 - 0.180 mm ma ..... ximum
allowable... ..... 0.25 mm

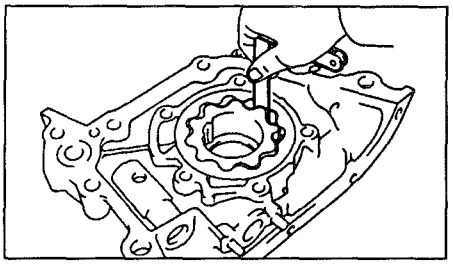

- End clearance between the rotors and with the casing wall:
  nominal. .....0.025 - 0.085 mm
  maximum
  permissible.. .....0.100 mm

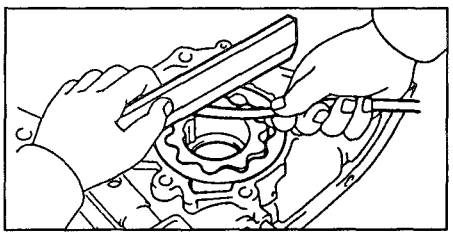

If the size of any clearance is greater than the maximum value, replace both gears. If necessar y, replace the entire pump.

Assembly

Position the drive and driven ro- tors with their marks facing the housing cover.

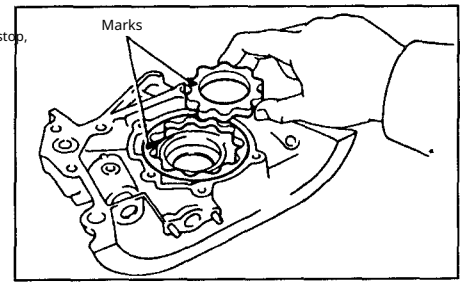

Install the pump housing cover and secure it with screws, tightening them.
2. Install the relief valve in reverse order of removal.

Fuel injection system

Description

The injection system consists of three com-
main subsystems: fuel, air supply, and electro
nic control. Fuel system Fuel is supplied by
a pump through a filter to eac
h injector under the pressure set by the fuel p
ressure regulator.

The fuel pressure regulator ensures th
e pressure differential of the fuel betw
een the fuel rail and the intake manifo
ld. Excess fuel is returned to the tank t
hrough the return pipe. Fuel is in
jected into the intake manifold in acco
rdance with signals from the electroni
c control unit.
The air supply system The air sup
ply system provides the amount of air re
quired for the Engine to operate. The am
ount of air entering the engine is
determined by the throttle valve opening
angle and the rotational speed of the en
gine crankshaft. The airflow passes throu
gh the air filter, the throttle body passage
and enters the upper part of the intake
manifold, from where it is distributed to t
he engine cylinders.

At low coolant temperatures, the speed co
ntrol system valve opens (the valve) of the
rotational speed control system opens

into the upper idle portion of the intake stroke and the intake manifold air enters
through a bypass passage in addition
to the air passing through the throttle
valve. Thus,
even if the throttle valve is com-
pletely closed, air still enters the
the upper part of the intake manifold,
and, as a result, the idle speed increas
es (1st stage of idle speed control). Th
e upper part of the intake manifold re
duces pulsations in the airflow.

Electronic control system All
engines are eq
uipped with Toyota's electronic control
system, which regulates fuel injection
and ignition timing—

engine speed at idle, diagnostic system, etc., usin
g an electronic control unit

control using the microcomputer. Precautions 4. Do not install a powerful radio station on the vehicle
computer. Th
e electronic control unit performs the follow
ing functions:

1. Fuel injection control. Various
sensors detect the intake manifold air
pressure; engine crankshaft rotational
speed; oxygen content in the exhaust
gases; coolant temperature; intake ai
r temperature; atmospheric pressure;
etc., and convert the obtained informa
tion into electrical signals sent to the
electronic control unit.

Based on these signals, the elec-

tronic control unit determines
required quantity The fuel syste
m controls the injectors. The amount of fuel su
pplied is regulated by the duration of the raise
d position of the injector's shut-off needle.

2. Control of ignition timing advance.
Ignition.
The values of the optimal ignition advance angle for all po
ssible engine operating modes are stored in the electronic
control unit's memory. Using signals from various sensor
s that monitor the engine operating conditions, the electr
onic control unit generates pulses that control spark form
ation at precisely determined moments in time.
The electronic control unit warns of a malfunction or abnormal operat
ion by means of the "CHECK" warning lamp on the instrument panel. T
he fault is identified as a diagnostic code, which is stored in the electro
nic control unit. The diagnostic code can be decoded by the number o
f flashes of the indicator when the "TE1" and "1" terminals are shorted. Diagnostic codes are described below.

3. Idle speed control system.

The optimal idle speed data correspon
ding to various conditions (for example
, coolant temperature, air conditioner
on/off, etc.) are stored in the electronic
control unit's memory. Sensor signals a
re fed to the electronic control unit, wh
ich controls the airflow through the by
pass channel (in addition to the throttl
e valve) and adjusts the idle speed acc
ording to the specified value.

4. Diagnostics.

4. "Fail-Safe" ("Drive-to-Home") function.

In case any sensor fails, an emerge
ncy operating mode is provided (to
allow driving to the nearest service
station). At the same time, the "CH
ECK" warning light illuminates on t
he instrument panel.

Precautions for servicing el
ectrical equipment

1. Check the correct engine adjust
ments (see the chapter "Maintena
nce and General Inspection and Ad
justment Procedur
es"). 2. Precautions when connecti
ng test equipment.
a) Use the vehicle battery as the powe
r source for the stroboscope, tachom
eter, etc. b) Connect the tachomet
er probe lead to the "IG" (-) terminal o
f the diagnostic connector.

3. In the event of engine misfires, ta
ke the following precautions.

a) The battery terminals must be securel
y connected to the battery posts.

b) Handle high-voltage wires with care.

c) After completing repair work, ensure t
hat all ignition system wires are correctly
and securely connected.

d) When cleaning the engine compartm
ent, prevent water from reaching electr
onic system components.

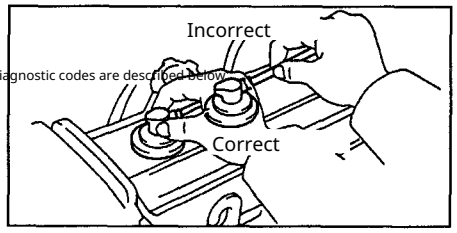

Precautions when the vehicle is equ
ipped with a mobile radio co
mmunication system The
electronic co
ntrol design is made so as to unit
exclude the influence
of external
electromagnetic interference on it. However,
if the vehicle is equipped
with a CB radio, etc. (even with a
n output power of only 10 W), it
may in some cases affect
the operation of the electronic control unit, especially
when The antenna and the connecti
ng (feeder) cables are routed next to
the electronic control unit. Theref
ore, the following precautions must b
e observed: 1. Install the antenna
as far away from the electronic contr
ol unit as possible. The electronic con
trol unit is located under the instrum
ent panel, so the antenna should be i
nstalled in the rear of the vehicle. 2. R
oute the antenna cable a
s far away from the electronic control
unit wiring as possible—at least 20 c
m—and do not twist them together.

3. Check the correct tuning (matching)
of the antenna cable and the antenna.
Antenna.
properly adjusted station.
5. Do not open the cover or housing of
the electronic control unit unless absol
utely necessary. (Some leads may be d
amaged by static electricity).

Precautions when working
with the air supply syste
m

1. Removing the engine oil dipstick, the oil
filler cap, hoses, etc. may cause disruptio
n of engine adjustments. 2. Disconnecting
, loosening fasteners, or cracking

elements of the air supply system (between the throttle body and the cylinder head) will cause air ingress, which will lead to engine malfunction. Precautions when working with the electronic control system

1. Before disconnecting the electrical connectors of the electronic control unit, it is necessary to cut electrical power either with the ignition key or by disconnecting the battery terminals. Warning: be sure to read the diagnostic code before disconnecting the battery terminals. 2. When installing the battery, do not reverse the polarity. 3. Do not subject fuel injection components and especially the electronic control unit to impacts. 4. Be careful when troubleshooting; with a large number of transistor circuits, even slight careless contact with lead terminals can cause serious damage.

5. Do not open the cover of the electronic control unit housing. 6. In rainy weather, protect electronic control units from water ingress. The same applies when washing the engine. 7. Replacement parts should be

carried out only with equivalent parts. 8. Be careful when disconnecting and connecting wiring connectors.

a) When disconnecting, release the latch by pressing the spring, and pull out the connector, holding it by the housing.

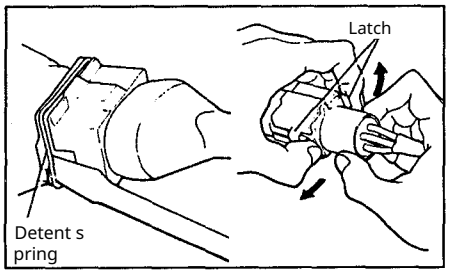

b) When connecting, fully insert the connector and ensure it is locked (secured).

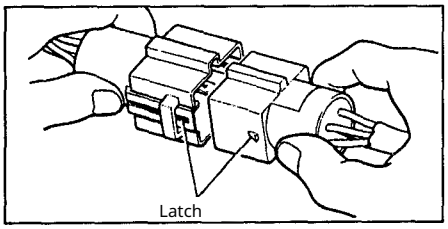

9. When checking the connector with a tester. a) If a waterproof connector is being tested, carefully remove the protective cover.

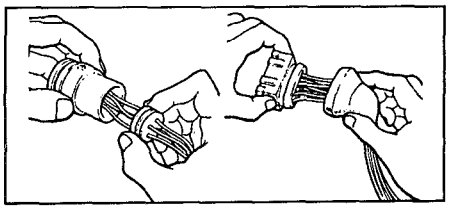

b) When checking resistance, current, or voltage, always insert the tester probe from the wire side.

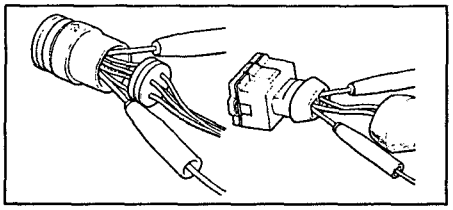

c) Do not apply excessive force. d) After checking, securely install the protective cover on the connector. Precautions when working with the fuel system 1. Before starting work on the fuel system, disconnect the negative cable from the battery.

Warning: Any diagnostic code stored in the electronic control unit is erased when the negative (-) terminal is disconnected from the battery. Therefore, it is necessary to read the diagnostic codes before disconnecting. 2. Do not smoke or use open of the battery, flame when working with the fuel system.

3. Do not allow the removal of gasoline from rubber or leather items

4. When disconnecting the high-pressure fuel line, a large amount of fuel spills out. Therefore,

The following steps must be taken: a) Remove the trunk trim.

b) Disconnect the fuel connector pump.

c) Start the engine. After it stops on its own, you-turn on the ignition.

g) Place a container under the component being dismantled.

d) Slowly loosen the connection.

e) Disconnect the connection.

g) Plug the connection with a rubber stopper.

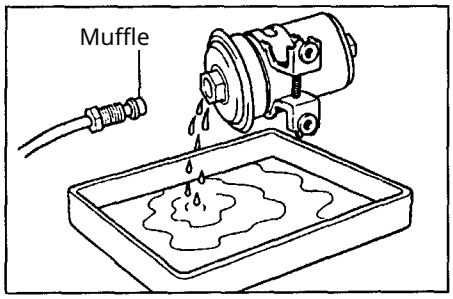

3) Reconnect the fuel pump connector.

и) Reinstall the trunk lining.

5. When tightening a nipple connection or a bypass-bolt connection on a HIGH-pressure fuel line, take the following actions: (Bypass-bolt connection) a) Always use a new gasket.

b) Screw the bolt in by hand.

c) Tighten to the required tightening torque.

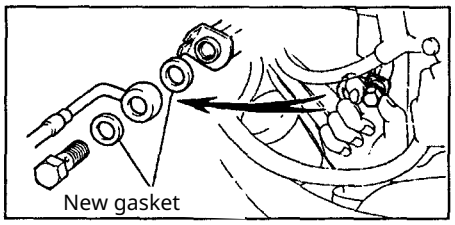

(Nipple connection)

a) Apply a thin layer of engine oil to the nut and screw it in. b) Use a torque wrench to tighten the connection with the required

torque tightening.

6. Precautions for removal and installation of injectors.

a) Never reuse the O-ring seal.

b) When installing the O-ring on the injector, take care not to damage it under any circumstances.

c) Before installation, lubricate the O- ring seal with spindle oil or fuel. Never use engine oil, transmission oil, or brake fluid.

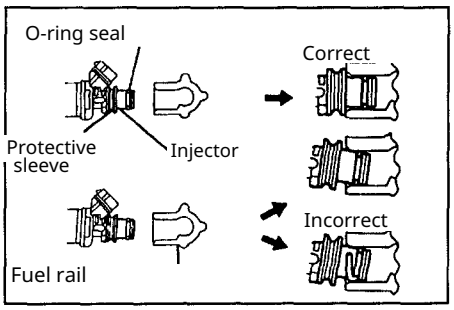

7. Connect the injector to the fuel rail and the intake manifold as shown in the illustration.

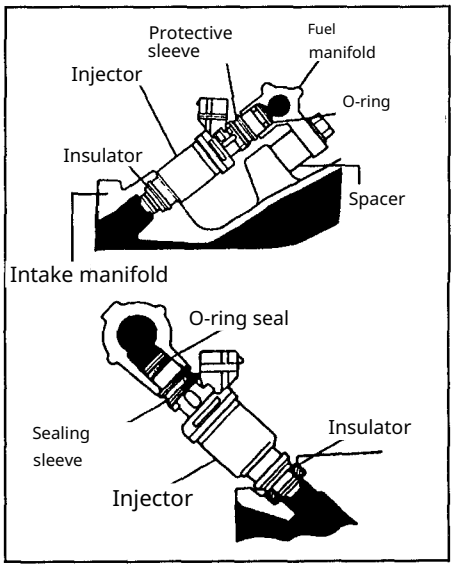

8. After servicing the fuel system, check for the absence of fuel leaks.

a) Use a service wire to short the "+B" and "FP" terminals of the diagnostic connector.

b) Turn the ignition on (do not start the engine!).

c) If you pinch the fuel return hose, pressure in the high-pressure fuel line will rise

to approximately 392 kPa. Ensure there are no fuel leaks along the entire line. Ca ution: pinch the hose.
Never kink the fuel line to avoid damaging it.

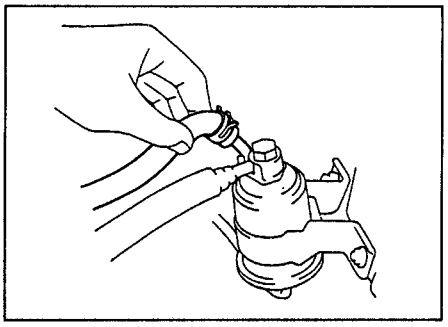

g) Turn off the ignition.
h) Disconnect the service wire from the terminals of the diagnostic connector.

System diagnostics

Description

The electronic control unit (ECU) has a b uilt-in ongoing self-diagnostic system th at continuously monitors the engine con dition based on sensor signals. If a malf unction is detected, this system identifie s it and notifies the driver with a warnin g indicator "CHECK ENGINE", which is illu minated by the warning lamp located on the instrument panel. By analyzing vari ous signals (see the diagnostic code tabl e below), the ECU determines the failing system by

the magnitude of operational para- m eters recorded by the corresponding s ensor or actuator. The warning light o n the instrument panel informs the dri ver of the presence of a fault. The sign al turns off automatically immediately after the fault is corrected. However, t he ECU stores fault codes in its memor y (usually, except for codes No. 16, 43, 51, 53) associated with the respective f ailures until the diagnostic system is cl eared (the information is "reset") by re moving the "EFI" fuse with the ignition turned

off.

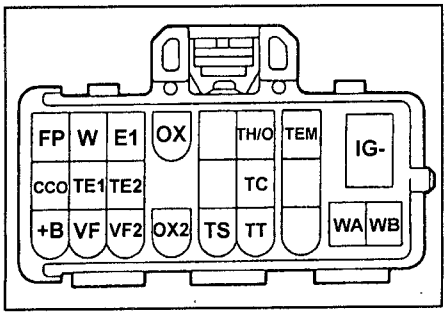

Diagnostic connector.

If a malfunction was detected, then w hen working in the test en-

When the button is pressed, its code will be displayed (except for the codes listed in th e table). At the same time, the terminals "T E2" and "E1" of the diagnostic connector m ust be shorted.
When operating in test mode, even after th e fault has been corrected, the diagnostic c ode will remain stored in the memory of th e electronic control unit with the ignition of f (except for those noted above). This can a lso occur when operating in the current sel f-diagnosis mode. The selection of the self- diagnosis mode (current or test) and the di splay of diagnostic codes is performed by s horting the "TE1", "TE2", and "E1" terminal s of the diagnostic connector.

Engine malfunction indicator lamp ("SN ESK") 1. The "SNESK" indicator lamp is a warning light that forms a light display o n the instrument panel; it lights up when t he ignition is switched on and the engine i s not running.

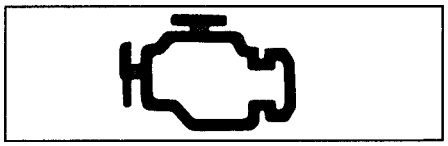

2. After starting the engine, the "SNESK" in dicator on the dashboard should go out. If the warning lamp remains lit while the eng ine is running, this means that the diagnos tic system is warning of malfunctions in the engine operation—
of the throttle or its systems.

Diagnostic code output

Attention: two main modes are used during diagnostics: on-goi ng self-diagnosis and testing

Current self-diagnosis mode To obt ain the diagnostic output code, perfo rm the following procedures.

1. Check the initial conditions.
a) Battery voltage - not less than 11 vo lts.
b) Throttle valve — fully closed (the "I DL" terminals of the throttle position s ensor are closed).

c) Gearshift lever in the neutral position

position.
g) All additional equipment
turned off.

d) The engine is warmed up to normal operating temperature.
2. Turn the ignition on, but do not start the engine.
3. Short the diagnostic connector termin als "TE1" and "E1". 4. Read the diagn ostic code by the number of flashes on t he "CHECK" indicator. (See diagnostic co des in the table below.)

Diagnostic code format
a) Normal system operation
(no fault present).
The indicator light flashes on and off 2 times per second.

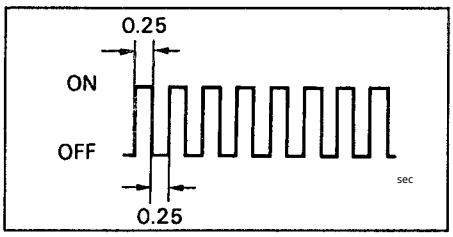

b) Fault code indication. When a fault is pr esent the indicator light flashes every 0.5 s econds. The first sequence of flashes corres ponds to the first digit of the two-digit diag nostic code. After a 1.5-second pause the s econd sequence of flashes is shown, corres ponding to the second digit of the code. If t wo or more fault codes are present, a 2.5-s econd interval is inserted between their ou tputs.

After all codes have been displayed, there is a 4.5 s pause, and then they all repeat until the "TE1" and "E1" terminals of the diagnostic connector are shorted.

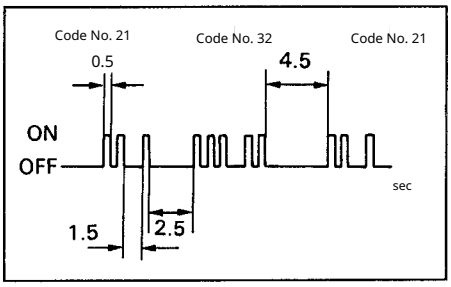

Attention: if there are multiple fault code s, their indication starts from the smaller code and continues in ascending order.

c) Two-stage algorithm for determini ng faults.

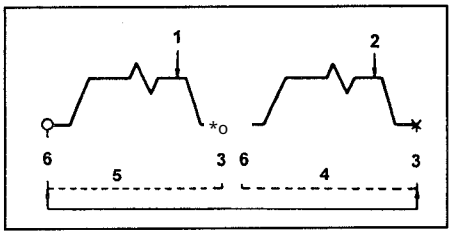

1 - recording of the fault the first time (preliminary storing in memory), 2 - rec ording of the fault the second time (hig hlighting on the light panel),

3 - ignition off, 4 - second cycle, 5 - first cycle, 6 - ignition
Included.

When recording certain codes, a two-stag e algorithm is used. It consists of tempora rily storing the fault code in the memory o f the electronic control unit when the fault first appears. If the same fault is detected during the second driving test, the indicat or panel lights up. The second driving test is repeated in the same mode. (However, the ignition must be turned off between t he first and second driving test cycles.)

In self-diagnosis in test mode, the indicator p anel turns on at the first occurrence of a fault . 5. After completing the diagnosis, disconne ct the wire from the diagnostic connector.

Test Mode

Caution:

Compared with the normal self-diagnosi s mode, self-diagnosis

in test mode has increased sensitivity to fa ult detection. This allows identification of f aults in the electrical circuits of th e starting system, the air conditioning syst em, and also in the electrical circuit of the starter inhibit switch.

Self-diagnosis in test mode allows detection of faults that are also rec orded

by the normal self-diagnosis. To obt ain an output diagnostic code in test mode, th e following procedures must be performed.

1. Check the initial conditions. a) Battery voltage - not less than 11 volt s. b) Engine warmed up t o normal operating temperature.

c) Gearshift lever - in neutral

position.

g) All additional equipment turned off.

2. Short the TE2 and E1 terminals of th e diagnostic connector with a suitable wire, then turn the ignition on, and the self-diagnostic system will operate in te st mode.

Attention: confirmation that the self-diagno stic system is operating in test mode is the f lashing of the "CHECK" warning lamp when the ignition is on. The duty cycle of the puls es — the time between the end and the star t of consecutive pulses (flashes) — is 0.13 s.

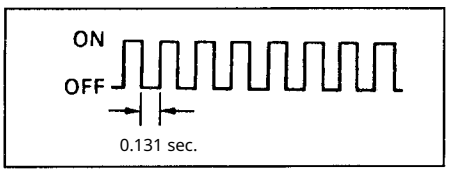

3. Start the engine and begin driving the vehicle at a speed of 10 km/h or higher.

or higher.

4. Simulate the situations in which the malf unction appears.

5. Short the "TE1" and "E1" terminals of th e diagnostic connector using a suitable w ire.

6. Read the diagnostic codes by the number o f flashes of the "CHECK" warning light.

7. After completing the diagnosis, disconnect the wires from the diagnostic connector.

Attention:

- The system will not enter test mode if the "TE2" and "E1" terminals are shor ted after the ignition has been turned on.
- At vehicle speeds of 5 km/h and belo w, code No. 42 (vehicle speed sensor) w ill be output, which is not an indication of a malfunction.
- If the engine does not turn over by th e starter, code No. 43 (starter) will be dis played, which is not an indication of a m alfunction.
- If the automatic transmission shift lever i s in positions "D", "2", "L" or "R", or if the air conditioner is on, or if the accelerator peda l is fully depressed, code No. 51 ("air conditi oner engaged") will be output, which likewi se is not an indication of a malfunction.

4. Read the diagnostic code by the number of flashes of the "CHECK" warning lamp. (See diagnostic cod es in the table below).

Diagnostic indication

1. If two or more types of malfunctions a ppear at the same time, the code with th e lowest number is output first, followed by codes in ascending numerical order.

2. All fault codes recorded durin g the driving cycle, except those mentio ned above, are retained in the electronic control unit memory from the moment of registration until they are cleared ("re set").

3. After the malfunction is repaired, th e fault codes disappear from the "CHE CK" indicator panel but remain stored in the electronic control unit memory , except for the code numbers indicat ed above. Clearing

of the diagnostic code

1. After repairing the faulty unit, the dia gnostic code remains stored in the me mory of the electronic control unit. The refore, it must be removed (erased) by disconnecting the "EFI" fuse (with the i gnition switched off).

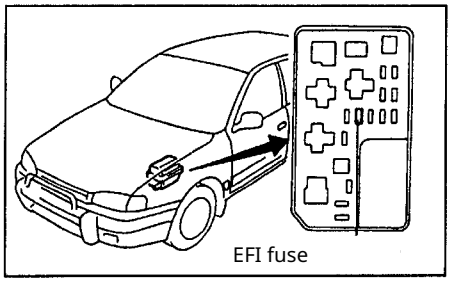

4A-FE, 7A-FE.

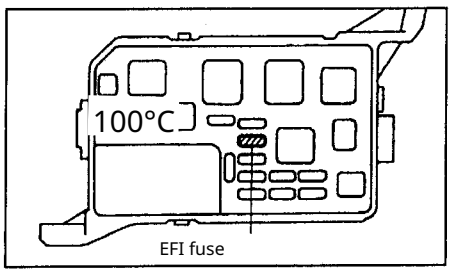

4A-GE.

Shutdown time (at least 10 s) de- PENDS o n the ambient temperature (the lower th e temperature, the longer the fuse must r emain disconnected).

Note:

- Erasure can also be carried out by disconnecting the negative (-) terminal of the bat- tery. However, in this case other systems with "memory" (clock etc.) will also be "cleared".
- If the diagnostic code is not erased, it will remain in the memory of the electronic control unit and will reappear together with a new code if a future fault occurs.
- If it is necessary to disconnect (rem ove) the battery, fault codes must firs t be read.

2. After the erasure operation it is necessary to perform a road test and ensure that the "normal operation" code is displayed on the "SNESK" panel.

If the same diagnostic code reappears on the "SNESK" panel, this indicates that the repair work was performed unsatisfactorily.

system Diagno stic circuit check

Troubleshooting volt/ohmmeter

Attention:

- Before beginning troubleshooting it is recommended to check the fuses, fusible links and the condition of the connections.
- The troubleshooting procedures are based on the assumption that the fault i s either an open circuit, a short circuit in the wiring outside the electronic contro l unit, or a short circuit within the contro l unit itself.

- If the engine malfunction occurs while the required operating voltage is presen t at the terminals of the electronic contro l unit, then the control unit is faulty and must be replaced.

Procedure for Checking the Electronic Fuel Injection Control System Attention:

- Perform all voltage measurements wit h the connectors connected. The bat
- tery voltage must be at least 11 V with the ignition turned on. Using a voltmet er with high input impedance (at least 10 kΩ/V), measure the voltage a t each terminal of the electronic control unit. When measuring resistances:

- Do not touch the terminals of the electro nic control unit and perform all measureme nts with the diagnostic disconnected.

electronic control unit connector management.

- Insert the ohmmeter probes into connector on the harness side pro- water.

Diagnostic codes for the electronic control unit

Code	System or sensor	Causes of malfunction	Fault location
-	Standard	In this case, none of the codes not detected	-
12	Sensor position crankshaft shaft	No NE or G signal transmission | 1. Open circuit or short circuit in the position sensor circuits to the electronic control unit | crankshaft and camshaft position for a duration of 5 seconds or more per-|2. Crankshaft position sensor after the starter is engaged.	3. Camshaft Position Sensor 4. Combined Ignition Assembly 5. Electronic Control Unit
13	Sensor Crankshaft position sensor shaft	No NE signal transmitted to the electronic - |1. Open circuit or short circuit in the NE and G circuits to the control unit in the flow- 2. Distributor hold for 1 second or longer when frequent - 3. Electronic control unit for rotations above 1500 rpm or 1000 rpm (4A-GE since 1997)	
14	System ignition	No "IGF" signal from the igniter | 1. Open circuit or short circuit in the igniter circuits to the electronic control unit | "IGF", "IGT" when idling for 1 second or more during operation 2. I gnition switch	3. Electronic Control Unit
16	Control signal from the a utomatic transmission (AT)	There is no proper control signal from the automatic transmission at the output of th e electronic control unit	1. Electronic control unit
21	Oxygen sensor	Break or short circuit in 1. Oxygen sensor heater circuit oxygen sensor heater circuit | 2. Oxygen sensor heater sensor for 1 second or 3. Electronic control unit more ("NT")	
		At engine speeds above 2500 | 1. Oxygen sensor circuit rpm the amplitude of the oxygen sensor signal oscillation 2. Oxygen sensor decreased to 0.3 V within a time span 3. Electronic control unit of 60 seconds or more. Note: a two- stage algorithm for diagnosing malfunction determination	
22	Coolant temperature sensor-| e cooling- sensor circuit	Open circuit or short circuit in 1. Coolant temperature sensor circuit ature sensor of th ("THW") for 1 s or more 2. Coolant temperature sensor system 1 s or more	
24	Intake air tempera- | ture sensor manifold	Open circuit or short circuit in 1. Intake air temperature sensor circuit on the intake the intake air temperature sensor ("TIA") for 1 s 2. Intake air temperature sensor ("TIA") for 1 s 3. Engine control unit 1 s or more	
25	Lean mixture signal	When the engine speed is above 1. Ground circuit. 2500 rpm or 1500 rpm (4A-FE, 7A-FE fro 2. Open circuit in the injector circuit m 1997) for 90 seconds or more, t 3. Fuel rail pressure (clogged inject he oxygen sensor does not provid or, etc.) 4. Oxygen sensor c e a "rich" mixture signal. ircuit Note: a two-stage | 5. Oxygen sensor stage diagnosis algo- 6. Ignition system cause of the malfunction.	
31	| Absolute pressure sensor Foot BO manifold	Open circuit or short circuit in 1. Absolute pressure sensor circuit pressure of the absolute pressure sensor circuit | 2. Absolute pressure sensor manifold pressure in intake manifold 3. Engine control unit ("ECU") for 1 second or longer.	
33	Idle speed control valve | control valve of idle speed of idle speed control valve | idle speed for 10 seconds or longer.	When idling, short circuit or open circuit in 1. Idle speed control valve circuit the idle speed control valve circuit. 2. Idle speed control valve of the idle speed control system for 10 seconds or longer	3. Engine control unit.

Diagnostic codes for the electronic control unit (continued)

Code	System or Fault	Causes	Fault Location
41	Throttle Position Sensor	Open or short circuit in the throttle position sensor ("VTA") intermittently	1. Throttle position sensor circuit position sensor circuit
		lie on me for 5 seconds or more	3. Electronic Control Unit
42	Sensor speeds vehicle	The vehicle speed sensor signal is not reaching the electronic control unit due to: 1. The vehicle speed sensor circuit 2. The vehicle speed sensor	
		at least for 10 with or more at an engine speed of 2000–5000 rpm (manual transmission) or mo- below 3000 rpm (automatic transmission, range- ny, except "R" and "N")	3. Electronic control unit
43	Starter (system launch)	No "STA" signal to the electronic control unit at the closed "TE1" and "E1" terminals of the diagnostic connector 1. Star ter relay circuit 2. Ignition lock circ uit	3. Ignition Lock 4. Electronic Control Unit
51	Switch air conditioner	1. Test mode, conclusions the connector pins are shorted.	1. Air conditioning switch circuit or air conditioning switch. "E "TE1" - 1" of diagnostic 2. Accelerator pedal and throttle actuator
		2. The following conditions apply: - air conditioning is on, - ranges other than "P" or "N" (automatic transmission), - the throttle position sensor terminal ("IDL") contacts are in an open state (OFF)	3. Throttle position sensor circuit or throttle position sensor- elephants (female) 4. Electronic Control Unit
52	Sensor Detonations	Knock Sensor Signal	1. Knock sensor circuit
		("KNK") does not reach the electronic control unit within 5 seconds at engine speeds of 1800–5000 rpm	
53	4A-GE Signal Detonation	Electronic control unit malfunction (knock control system) at engine speeds of 1800–5000 rpm for 1 second or longer	

Electronic control unit terminals

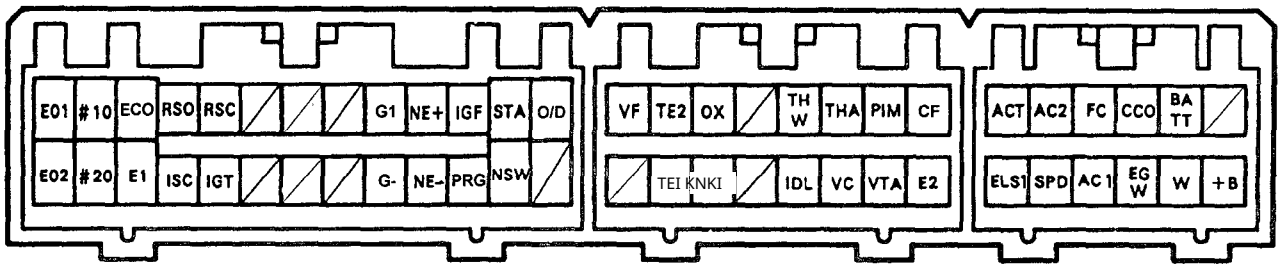

4A-FE (с 1995 г)

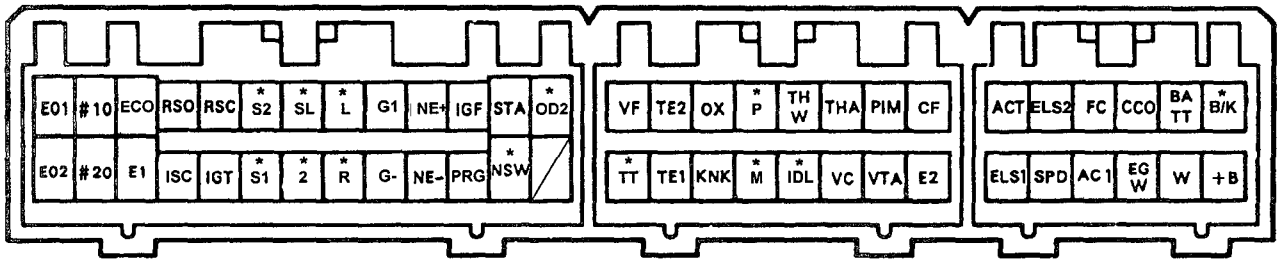

4A-FE (с 1996 г) (* - модели с АКПП)

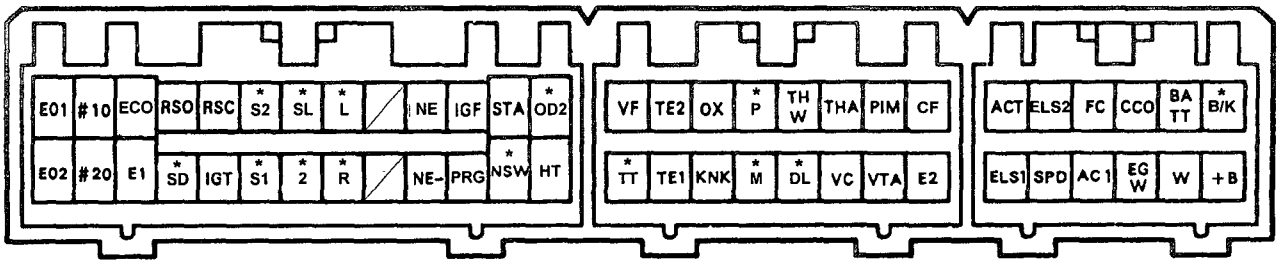

7A-FE (c 1995) (* - models with automatic transmission)

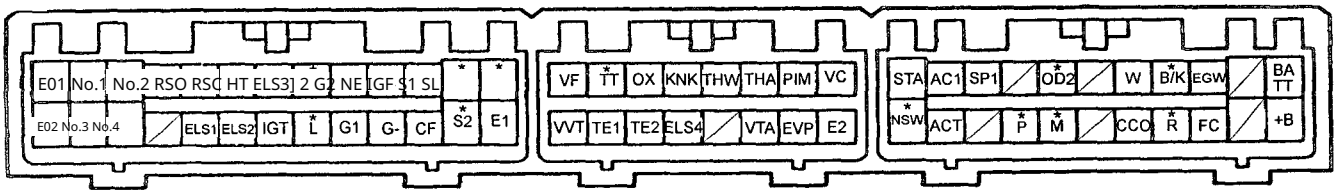

4A-GE (c 1996) (* - models with automatic transmission)

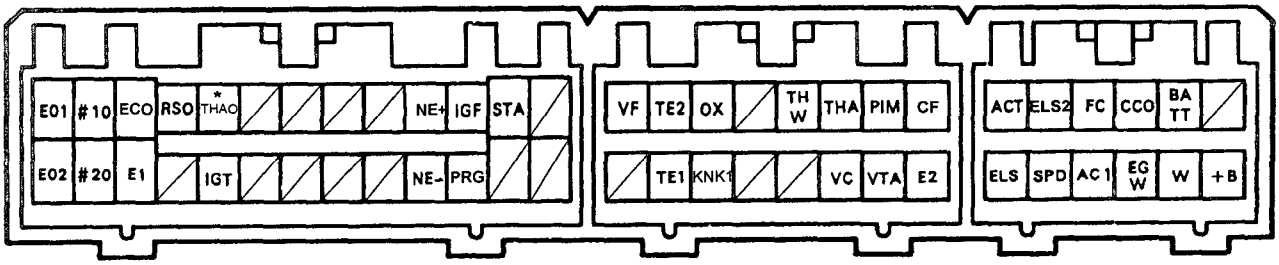

4A-FE (manual transmission from 1997) (* - 4WD, ** - 2WD)

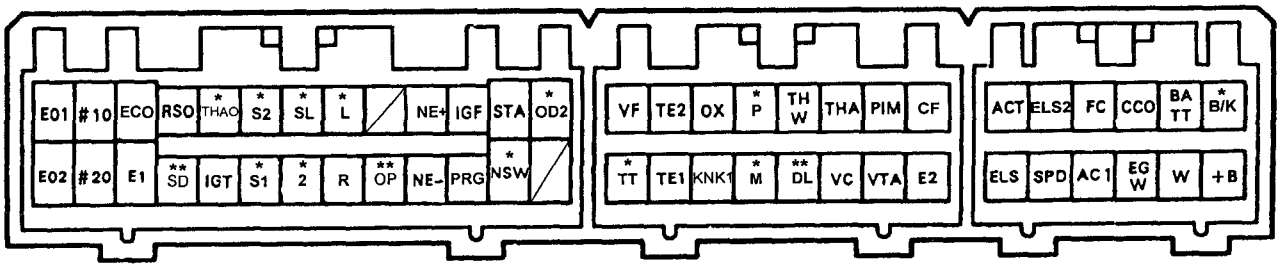

4A-FE (АКПП с 1997 г) (* - 4WD, ** - 2WD)

Engines 4A-FE and 7A-FE

Conclusion	Status	Voltage in
AC1 - E1	Ignition on. Air conditioner on	0-3
AC1 - E1	Ignition on. The air conditioner is off	9 - 14
ACT - E1	Ignition is on. Air conditioner on	4,5 - 5,5
ACT - E1	The throttle valve is fully opened from the fully closed position within 3 seconds	0 - 2
+B -E1	Ignition is on	9 - 14
BATT - E1	-	9 - 14
V/K - E1	Brake lights are on	7,5 - 14
B/K - E1	Stop lights off	0 - 1,5
CCO - E1	Exhaust gas temperature below 950°C	1,0 - 5,5
CF - E1	Ignition on	0-3
CF - E1	Air conditioner is on	9-14
ECO - E1	Air conditioner is on	7.5-14
ECO - E1	The air conditioner is off	0-1.5
EGW - E1	Exhaust gas temperature indicator is illuminated (pins CCO and E1 of the diagnostic connector are shorted)	0-3
EGW - E1	Idle	9 - 14
ELS1 - E1	Headlights on	7.5-14
ELS1 - E1	Headlights off	0-1.5
ELS2 - E1	Rear window heater on	7,5 - 14
ELS2 - E1	Rear window heater is on switched off	0 - 1,5
FC - E1	Ignition on	9 - 14
FC - E1	Idle	0 - 3
G1 - G-	Idle	≈
HT - E1	Idle (sensor heater is on)	0 - 3
NT - E1	Throttle valve fully open (sensor heater off)	9 - 14
IDL - E1	Ignition on Throttle valve closed	0 - 3
IDL - E1	Ignition on Throttle valve is open	9 - 14
IGF - E1	Idle	≈
IGT - E1	Idle	≈
ISC - E1	Idle speed, air conditioner turned off	9 - 14
ISC - E1	Idle, air conditioner on	0 - 3
KNK - E1	Engine speed 4000 rpm	≈
NE+ - NE-	Idle	≈
NE - NE-	Idle	≈
NSW - E1	Ignition on. Starter inhibit switch (P automatic transmission selector in positions P or N)	0 - 3

Engines 4A-FE and 7A-FE (continued)

Output	Status	Voltage voltage, in
NSW-E1	Ignition is on. Starter inhibit switch (automatic transmission selector in positions other than P or N) Idle	9–14
No.10-No.20 - E1		≈
OD2 - E1	Upshift switch in the ON position (O/D ON) Upshift switch in the ON position (O/D OFF) Engine speed 2500 rpm for 2 minutes after engine warm-up	9 - 14
OD2 - E1		0 - 3
OX - E1		≈
PIM -E1	Ignition on. No vacuum	3,3 - 3,9
PIM -E1	Ignition on. Vacuum 500 mmHg	1,3 - 1,9
PRG -E1	Ignition on	9 - 14
PRG -E1	Coolant temperature around 35°C after engine warm-up (for 0.3 sec)	≈
RSC, RSO - E1	Idle, air conditioner on	≈
RSC, RSO - E1	Idle, air conditioner off	≈
SPD - E1	Speed 20 km/h	≈
STA - E1	Cranking with starter	more than 6
TE1,2- E1	Ignition on	9 - 14
THA - E2	Ignition on. Air intake temperature 0–80°C	0,5 - 3,4
THAO - E2	Ignition on	≈
THW - E2	Ignition on. Coolant temperature 0.2–1.0 60–120°C	
VC - E1	Ignition on 4.5 - 5.5	
VF - E1	After warming up the engine, maintain engine speed at 2500 rpm for 2–3 minutes, then return to idle	1,8 - 3,2
VTA - E1	Ignition on Throttle valve closed	0,3 - 0,8
VTA - E1	Ignition on Throttle valve open	3,2 - 4,9
W -E1	No faults. The "SNESK" lamp is not lit and the engine is running.	9 - 14

Engine 4A-GE

Conclusions	Voltage, B	Status
+V - E1	9-14	Ignition on
AC1 - E1	9-14	Ignition on. Air conditioner off
AC1 - E1	0-3	Ignition is on. Air conditioner on
ACT - E1	9-14	Air conditioner is on
ACT - E1	0-2	Ignition on. Air conditioner on, throttle valve moves from fully closed position re- in fully open for 3 seconds

Engine 4A-GE (continued)

Conclusions	Voltage, V	Status
BATT - E1	9-14	-
BK - E1	9-14	Brake lights on (brake pedal pressed)
BK - E1	less than 3	Stop lights off
CF - E1	9-14	Engine coolant temperature above 90°C, air conditioner on
CF - E1	0-3	Ignition on
CCO - E1	3,7-5,5	Idle
EGW - E1	less than 3	Exhaust gas temperature warning light is on (pins CCO and E1 of the diagnostic connector are shorted)
EGW - E1	9-14	Idle
ELS1 - E1	7.5-14	Radiator fan is on
ELS1 - E1	0-1,5	Radiator fan is off
ELS2 - E1	7.5-14	Fan is on
ELS2 - E1	0-1.5	The fan is off
ELS3 - E1	7,5-14	The rear lights are on
ELS3 - E1	0-1,5	The rear lights are off
ELS4 - E1	7,5-14	Heater rear window on
ELS4 - E1	0-1,5	Rear window heater turned off
EVP - E1	≈3	Coolant temperature less than 30°C after engine warm-up (within 0.3 seconds) 9-14 Ignition on 9-14 Ignition on
EVP - E1		
FC - E1		
FC - E1	0-3	Idle
HT - E1	0-3	Ignition on
HT - E1	9-14	Idle
IGF - E1	≈	Idle
IGT - E1	≈	Idle
KNK - E1	≈	Increase engine speed to 4000 rpm
NE - G-	≈	Idle
NSW - E1	less than 3	Ignition ON. Selector Automatic transmission selector in positions P or N

Conclusions	Voltage, V	Status
NSW - E1	9-14	Ignition ON. Selector Automatic transmission selector in positions other than P or N
№1-4 - E1	≈	Idle
OX - E1	≈	Maintain engine speed at 2500 rpm for 2 minutes after the engine has warmed up Ignition ON and a vacuum of 67 kPa (500 mmHg) is applied At atmospheric pressure Idle. Air conditioner on
PIM - E1	1,3-1,9	
RIM - E1	3,3-3,9	
RSO-E1, RSC - E1	≈	on or off
SP1 - E1	≈	Speed 20 km/h
STA - E1	more than 6	Cranking by starter
TE1 - E1 TE2 - E1	9-14	Ignition on
TE1 - E1 TE2 - E1	0-3	Ignition on. TE1 and E1 pins of the diagnostic connector are shorted
THA - E1	0,5-3,4	Ignition on. Intake air temperature 0–80°C
THW - E1	0,2-1,0	Ignition on. Coolant temperature 60–120°C
VC - E1	4.5-5.5	Ignition on
VF - E1	1.8-3.2	After warming up the engine, maintain the engine speed at 2500 rpm for 2–3 minutes, then return to idle
VTA - E1	0,3-0,8	Ignition on. Throttle valve fully closed
VTA - E1	3,2-4,9	Ignition on. Throttle valve open
VVT - E1	9-14	Idle
VVT - E1	0-3	The throttle valve is fully open
W - E1	9-14	No faults (the "CHECK" warning lamp is extinguished) and the engine is running

Note: Symbol "" ≈ - indicates pulsations on the voltage.

Inspection of components of the injection system using an oscilloscope

Note: below are example oscillograms of the correct form for various engines.

EVP - E1 (4A-GE from 1996)
Scale: X - 100 ms, Y - 5 V. Condition: coolant temperature 35°C for 0.3 s (on a warmed-up engine).

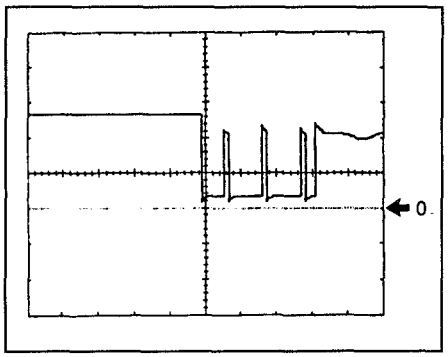

G1 - G-, NE - NE- (4A-FE since 1995)
Division value: X - 50 ms, Y - 2 V.
Mode: idle.

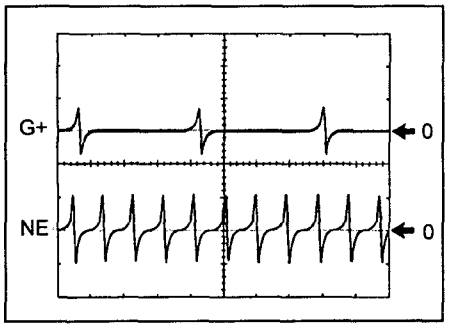

G1 - G-, G2 - G-, NE - G- (4A-GE from 1996)
Scale: X - 20 ms, Y - 5 V.
Mode: idle.

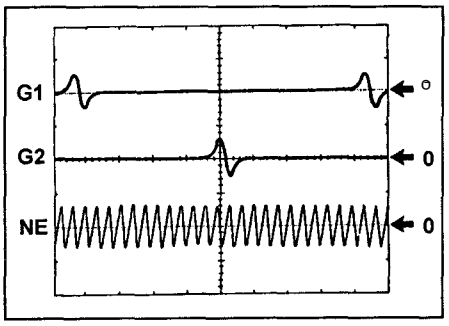

IGT, IGF - E1 (4A-FE, 7A-FE from 1995)
Scale: X - 20 ms, Y - 2 V.
Mode: idle.

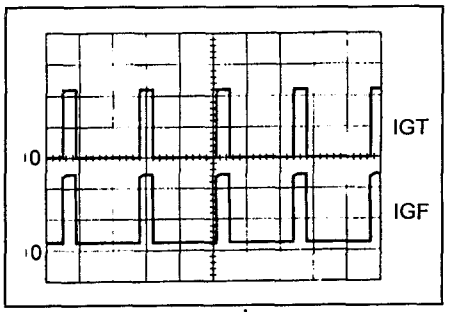

IGT, IGF - E1 (4A-GE from 1996)
Scale: X - 10 ms, Y - 2 V.
Condition: idle speed.

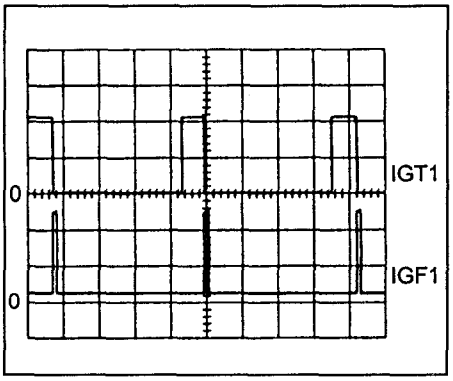

KNK - E1 (4A-FE, 7A-FE since 1995, 4A-GE since 1996)
Division value: X - 1 ms, Y - 0.5 V.
Mode: rotation speed 4000 rpm.

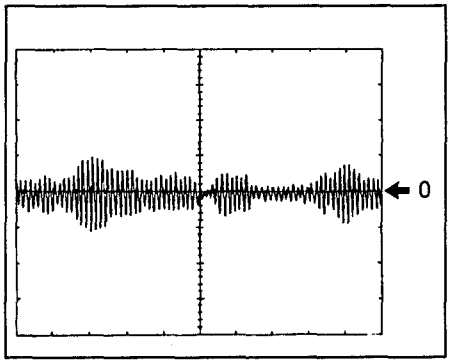

No.10-40 - E1 (4A-FE, 7A-FE from 1995)
Scale: X - 20 ms, Y - 20 V.
Mode: idle.

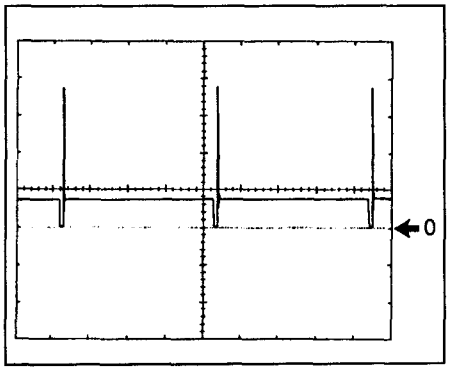

No.10-40 - E1 (4A-GE from 1996)
Division value: X - 20 ms, Y - 20 V.
Mode: idle.

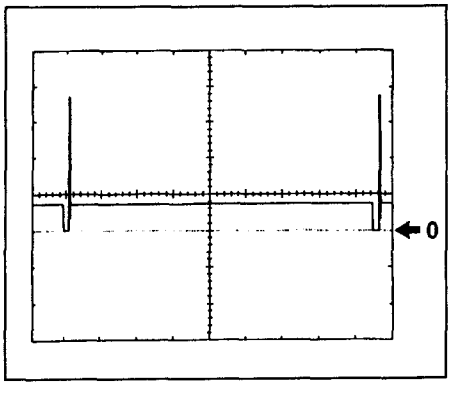

NE - NE- (7A-FE since 1995), NE+ (- NE- 4A-FE, 7A-FE since 1997)
Division value: X - 20 ms, Y - 2 V.
Mode: idle.

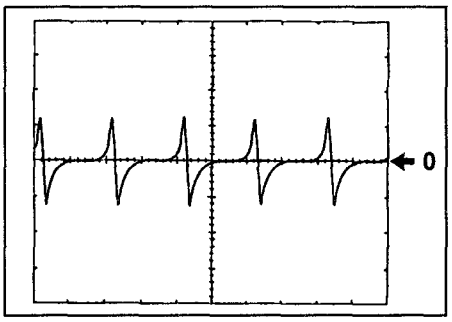

OX-E1 (4A-FE, 7A-FE from 1995 2, 4A-GE from 1996)
Scale: X - 500 ms, Y - 0.2 V.
Mode: rotation speed 2500 rpm.

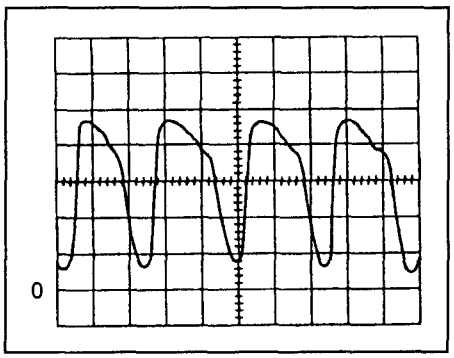

PRG - E1 (4A-FE, 7A-FE from 1995) Scale: X - 100 ms, Y - 5 V. Mode: coolant temperature 35°C after the engine has warmed up for 0.3 s (on a warmed engine).

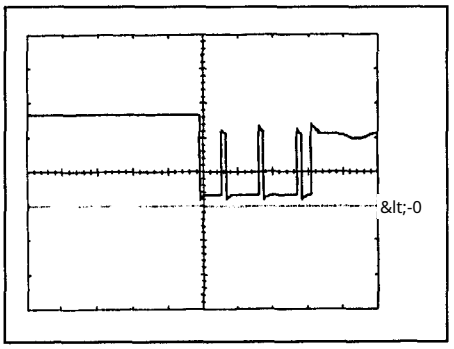

RSC, RSO - E1 (4A-FE, 7A-FE from 1995 2, 4A-GE from 1996)
Division value: X - 1 ms, Y - 5 V.
Mode: idle, air conditioner on / air conditioner off.

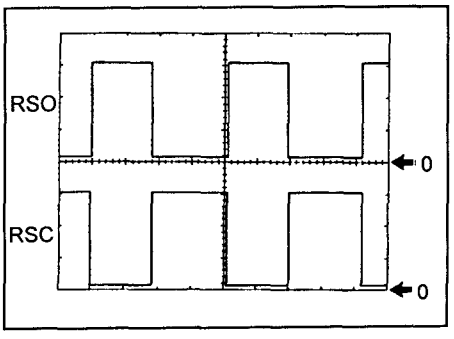

RSO - E1 (4A-FE since 1997)
Scale: X - 1 ms, Y - 5 V. Mode: idle, air conditioner turns on.

Pulse duty cycle (A):
air conditioner off.. .....2.8 ms
air conditioner on.... 3.5 ms

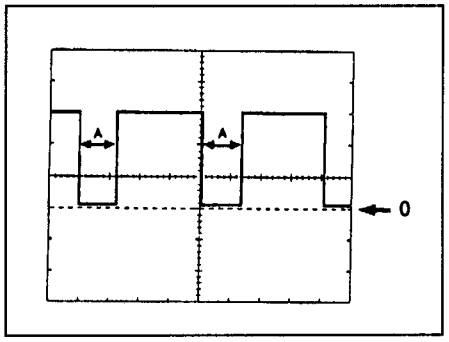

SP1 - E1 (4A-GE since 1996, 4A-FE since 1996), SPD - E1 (4A-FE, 7A-FE since 1997 2)
Scale: X - 20 ms, Y - 5 V.
Mode: speed 20 km/h.

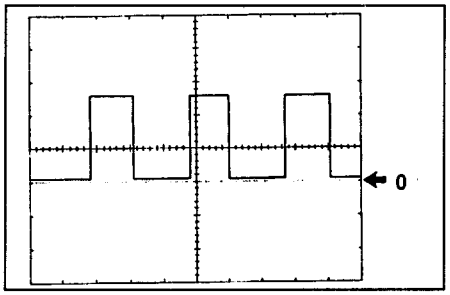

SPD - E1 (4A-FE, 7A-FE since 1995)
Scale: X - 20 ms, Y - 5 V.
Mode: speed 20 km/h.

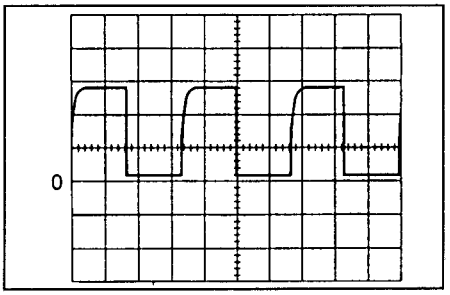

THAO - E1 (4A-FE from 1997 2)
Scale: X - 100 ms, Y - 5 V.
Mode: ignition on.

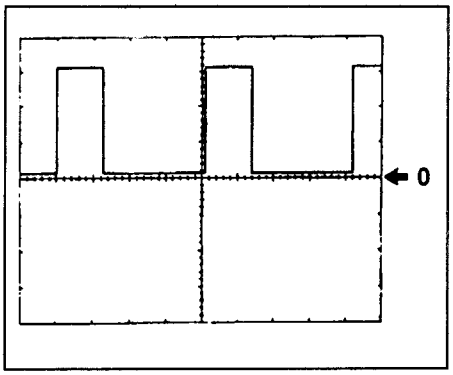

Some technical data of the electronic control system

	4A-FE 1995, 7A-FE 1995, 4A-GE 1996, 4A-FE 1997			
Injection duration, ms				
Idle	2,9-6,8	1,0-3,4	3,0-4,3	1,0-3,4
2000 rpm	2,9-6,8	1,0-3,4	3,0-4,3	1,0-3,4
3000 rpm	2,9-6,8	1,0-3,4	3,0-4,3	1,0-3,4
Ignition timing advance, degrees				
Idle (terminals "TE1"-"E1" shorted)	8-12	8-12	8-12	8-12
Idle (terminals "TE1"-"E1" open)	8-27	11-23	5-18	11-23
2000 rpm	25-44	25-40	35-45	25-40
3000 rpm	30-44	25-45	35-45	25-40
Idle speed control system valve (percentage increase in air supply)				
Idle	25-43	16-43	30-42	16-43
Switching the air conditioner from the "OFF" position to the "ON" position	12-40	3-40	10-30	3-40
Shifting the automatic transmission from the "N" position to the "D" position	2-10	4-7	2-5	4-7
Intake manifold vacuum, mm Hg				1-6
Ignition on	680-780	680-780	650-770	680-780
Idle	160-360	160-360	300-400	160-360
2000 rpm	145-345	145-345	300-400	145-345
3000 rpm	145-345	145-345	300-400	145-345

Fuel system

Attention: When performing work on removing and installing components of the fuel system, t he fuel pump connector must be disconnected as shown in the illustration by carrying out the f ollowing operations.

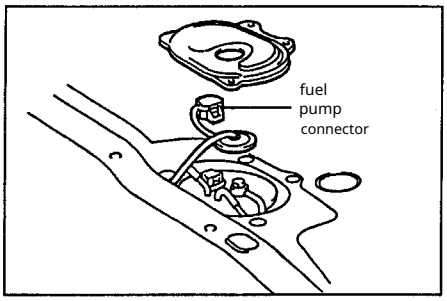

1. Remove the left front door sill trim.

2. Remove the lower trim of the left cente r pillar.
3. Remove the left rear door sill trim.

4. Remove the left rear seat cushion.

5. Remove the service hatch cover.
6. Disconnect the fuel connector
pump.

Fuel Pump

Engine Inspection

1. Check the operation of the fuel pump.
(a) Short the terminals "B+" and "GR" o f the diagnostic connector with a jum per. (b) Turn the ignition
on. Caution: do not start the engine.
(c) Check for fuel pressure in the hose leadi ng from the fuel filter.

Caution: at this moment you can hear the sou nd of fuel flowing from the differential pressu re regulator into the return line.

2. Check the fuel pressure
(a) Make sure the battery voltage is at least 12 V. (b) Disconnect the negati ve (-) cable from the battery.

(c) Place a suitable container (or lay do wn rags) under the fuel manifold.

(d) Slowly loosen the bypass bol t and disconnect the fuel pipe from the fuel manifold and remove the g askets; disconnect the inlet fuel hose fro m the fuel pipe.

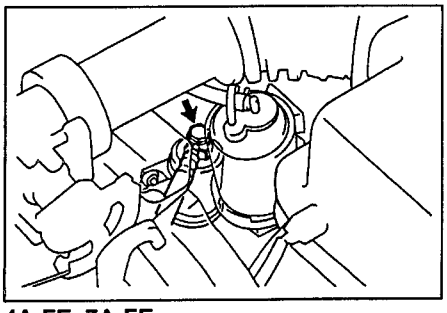

4A-FE, 7A-FE.

(e) Using new gaskets and the bypass bol t, install the inlet fuel hose and a pressur e gauge on the fuel pipe. Tightening torq ue...30 N·m

.....

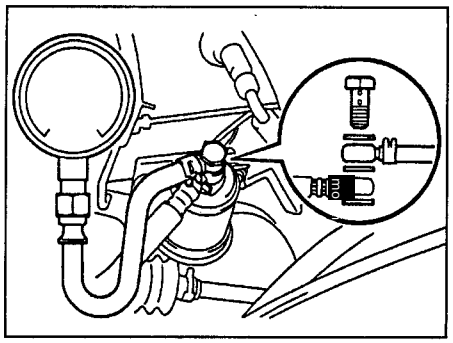

4A-FE, 7A-FE.

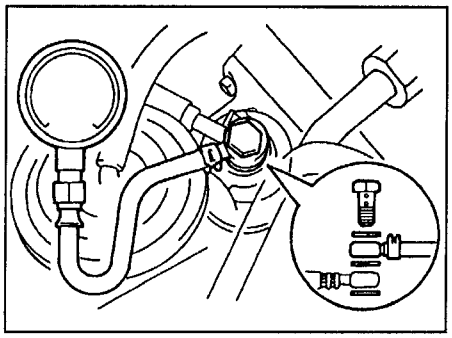

4A-GE.

(f) Wipe up any splashed fuel
livo.
g) Disconnect the vacuum hose from th e fuel pressure regulator and cap it.
3) Connect the (-) cable to the bat-

tery. 2. Disconnect the wiring harness, re-
start the engine.
k) Measure the fuel pressure at idle spee d. Specified fuel pressure: 4A-FE, 7A-FE ....2.87 - 2.93 kgf/cm², 4A-GE...2.4 - 2.8 kgf/cm² 2.4 - 2.8 kgf/cm² If the pressure i s higher, replace the fuel pressure regula ..... tor. If the press ure is lower, check:

- fuel hoses and their connections,

- fuel pump,
- - fuel filter,
- fuel pressure regulator. l) Recon nect the vacuum hose to the fuel pressur e regulator. m) Measure the fuel pressure at idle.

Nominal fuel pressure:
4A-FE, 7A-FE. ..... 2.35 kg/cm²
4A-GE. ..... 2.0 kg/cm²

n) Turn off the engine and make sure tha t the fuel pressure remains at least 1.5 kg /cm² for 5 minutes after the engine is sto pped. If it does not, check the fuel pu mp, the fuel pressure regulator, and/or t he injectors.

0) After checking the fuel pressure, dis connect the (-) lead from the battery a gain. Carefully remove the pressure g auge, taking care not to splatter.
fuel.
r) Using two new gaskets, attach the inl et fuel hose to the fuel pipe, threading i n the bypass bolt. Tightening torque...

..... *30 Н·м*

r) Connect the negative (-) cable to t he battery.
c) Ensure there are no leaks
fuel supply.

Removing the fuel pump

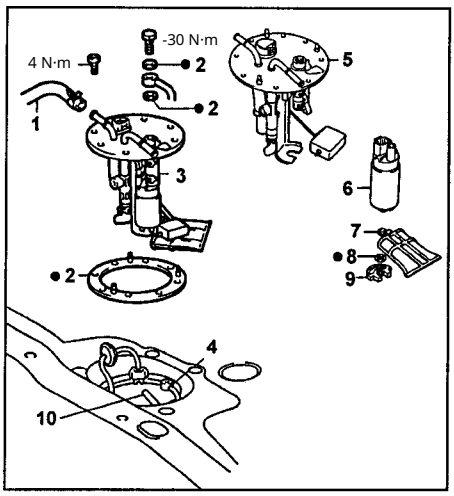

Fuel pump. 1 - fuel pic - hose of the tube kup, 2 - - gasket, 3 - f uel pump assembly, 4 - fuel pipe, 5 - fuel p ump bracket, 6 - fuel pump, 7 - fuel pump filter, clamp, 9 - damper, 10 - fuel return h ose. Precautions: do not smoke and do no - t use open f - lames when w orking with the fuel pump. 1. Dis connect the negative (-) cable from the ba ttery terminal.

Unscrew the mounting SCREWS and remove the service hatc h cover.
3. Remove the fuel pump and the fuel leve l sensor assembly by disconnecting the el ectrical connectors and hoses. 4. Discon nect the fuel pump mounting bracket fro m the fuel tank by unscrewing the mounti ng bolts. Disassembly of the f uel pump 1. Remove the fuel pum p from the bracket.

a) Disconnect the fuel pump wiring from th e connector.
b) Remove the lower part of the fuel pu mp from the bracket.

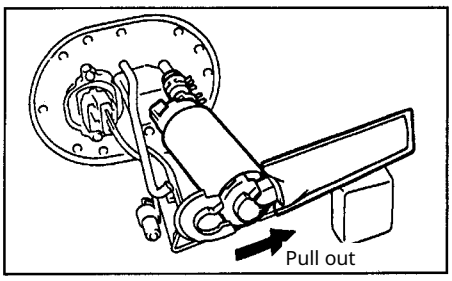

c) Remove the rubber damper
from the fuel pump.
d) Disconnect the fuel hose and
remove the pump.
3. Remove the fuel pump filter.
a) Remove the clamp.
b) Pull out the fuel filter.

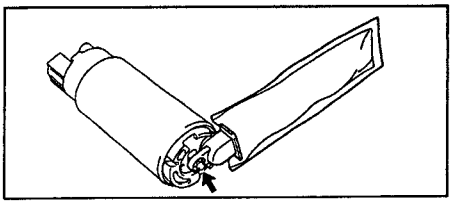

4. Remove the fuel level sensor from the fuel pressure regulator bracket by disconnecti ng the fuel level sensor connector and uns crewing the two screws.

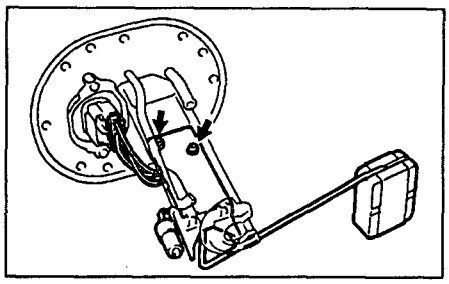

5. Unscrew the two screws, remove the c onnector fastening, the connector, and the gasket. Fuel pump assembl y The fuel pump is assembled in the rever se order of disassembly. New gaskets mu st be installed in the appropriate location s.

Fuel Pump Installation
The installation of the fuel pump is carried out in the reverse order of its removal. In d oing so, new gaskets should be installed in the appropriate places to replace the ones that were used. Checking the fuel p ump
1. Check the winding resistance
fuel pump connector.
Measure the resistance between the pump ter minals using an ohmmeter. Rated

resistance ..... 0.2–3.0 Ω

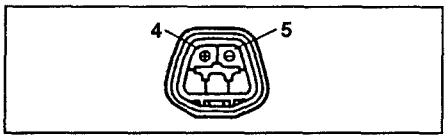

If the resistance goes beyond the specified limits, replace the fuel
pump.
2. Check the operation of the fuel pump. C onnect the wire from the pump's \"+\" term inal to the positive terminal of the battery, and the wire from the terminal to the negat ive terminal. Make sure the pump is operat ing. Caution:

- The check must be performed within 10 seconds to avoid burning out the winding
- The fuel pump should be located as fa r away from the battery as possible.
- Connect and disconnect wires only to the battery.

Fuel pump assembly The fuel pump is assembled in the reverse orde r of disassembly.

Fuel pump installation The fuel pu mp is installed in the reverse order of re moval. New gaskets should be installed i n the appropriate places to replace the u sed ones.

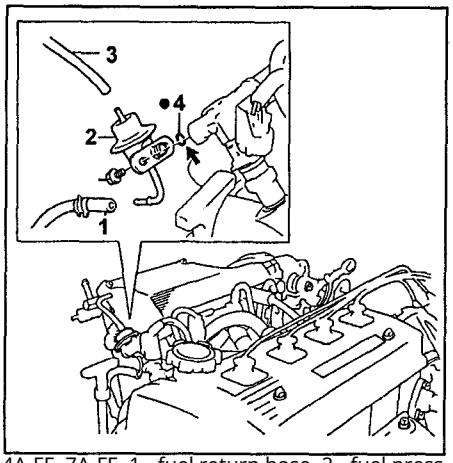

4A-FE, 7A-FE. 1 - fuel return hose, 2 - fuel press ure regulator, vacuum hose, 4 - O-ring seal.

3 -

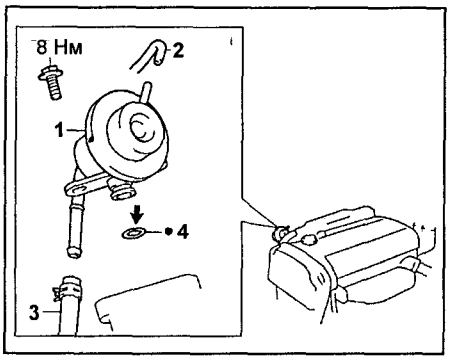

4A-GE. 1 - pressure regulator top-
fuel, 2 - vacuum hose,
3 - fuel return hose,
4 - O-ring.

Removal
1. Disconnect the cable from the ne gative (-) terminal of the battery.

2. Disconnect the vacuum hose. 3. Disco nnect the fuel return hose.

4. Remove the pressure regulator by unscre wing the 2 mounting bolts.

Installation
1. Install the regulator
a) Apply a thin layer of fuel (or litol) to the new O-ring seal and install it on the regu lator.

b) Rocking Move the regulator left -right, connect the regulator to the fuel mani fold.
c) Screw in the 2 bolts securing the regul ator.
Tightening torque 10 N·m Note: perform thi s operation correctly as shown in the illustra tion, avoiding pinching the O-ring seal.

2. Connect the top return hose
liva.
3. Connect the vacuum hose.

Fuel filter

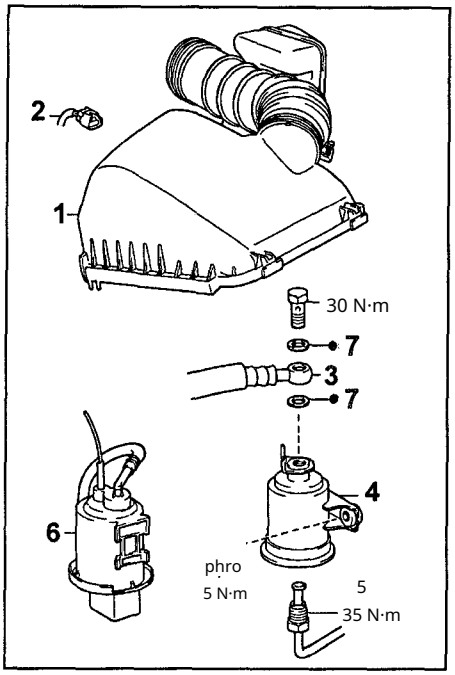

4A-FE, 7A-FE. 1 - air intake cover-
of the filter, 2 - sensor connector of the air tem-
perature at intake, 3 inlet fuel hose, fuel filter, 5 re turn fuel hose, 6 fuel vapor accumulator, 7 - gaske
4 - t.

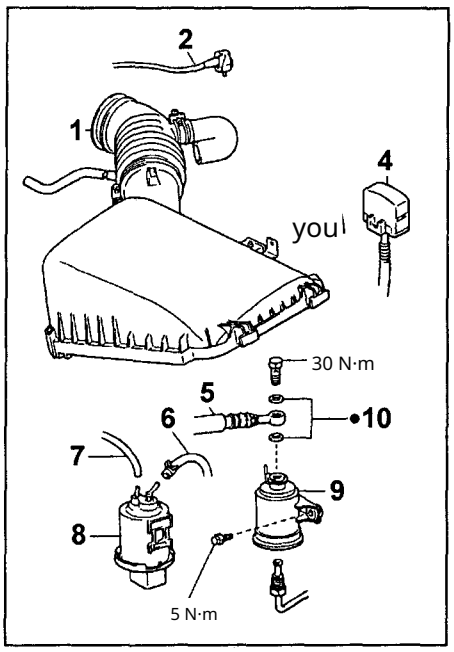

4A-GE. 1 ai -
r filter cover with air duct , 2 - high-voltage wire, 3 - intake air tempe rature sensor connector, 4 - diagnostic co nnector, 5 - fuel pipe No. 1, 6 - evaporative emissions system hose to the battery, 7 - vacuum hose, 8 - evaporative emissions sy stem to the battery, 9 - fuel filter, 10 - gask et.

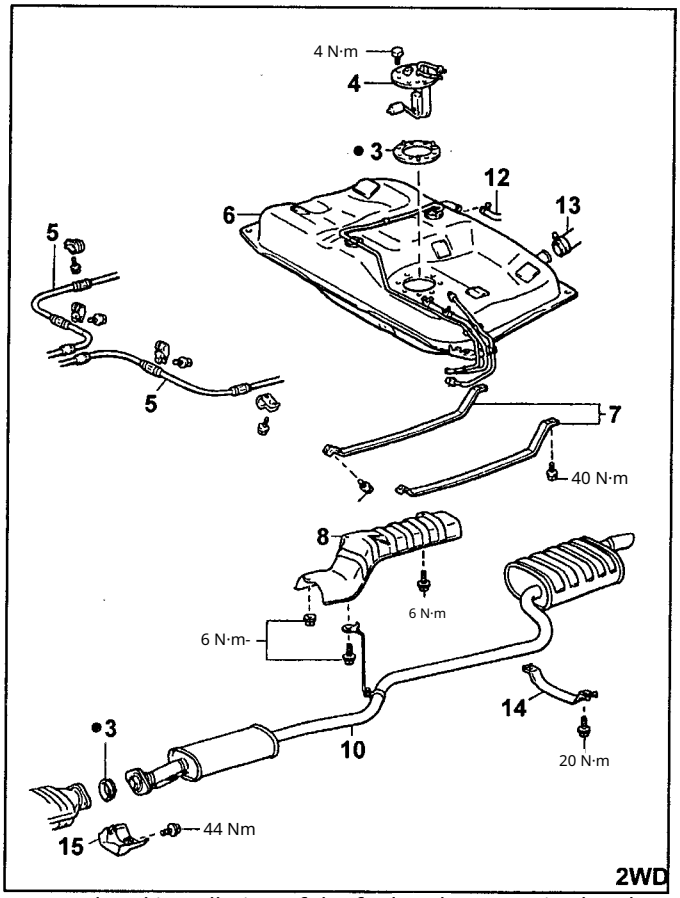

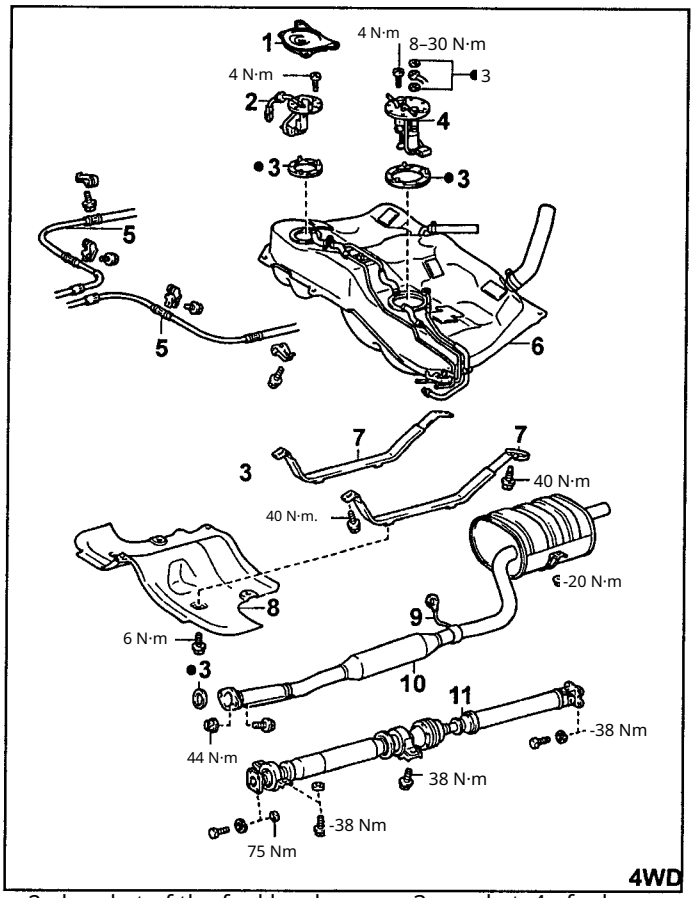

Removal and installation of the fuel tank. 1 - service hatch cover, 2 - bracket of the fuel level sensor, 3 - gasket, 4 - fuel pump assembly, 5 - parking brake cables, 6 - fuel tank assembly, 7 - fuel tank supports, 8 - fuel tank protector, 9 - bracket (for 7A-FE), 10 - exhaust pipe, 11 - driveshaft, 12 - fuel hose, 13 - fuel filler hose, 14 - muffler bracket, 15 - bracket.

Fuel tank

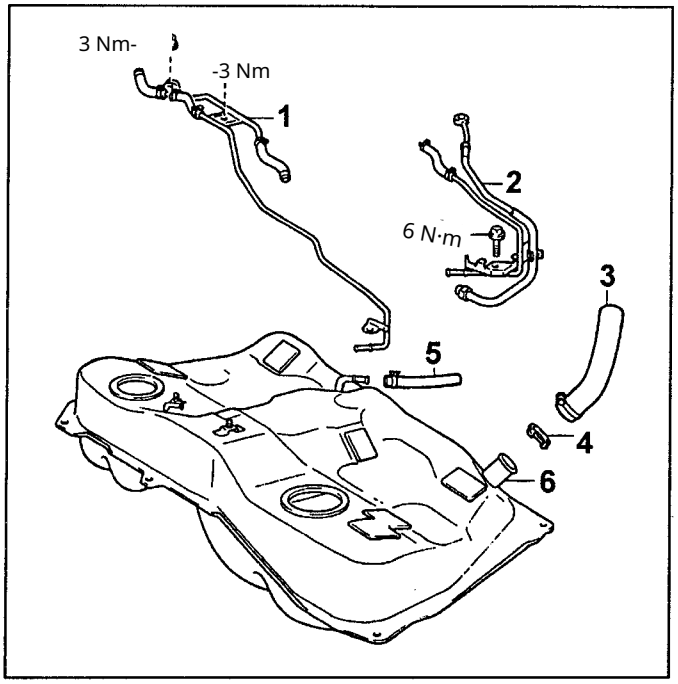

4A-GE, 7A-FE. 1 - reserve line, 2 - fuel return tube, 3 - fuel filler hose, 4 - check valve, 5 - fuel hose, 6 - fuel tank.

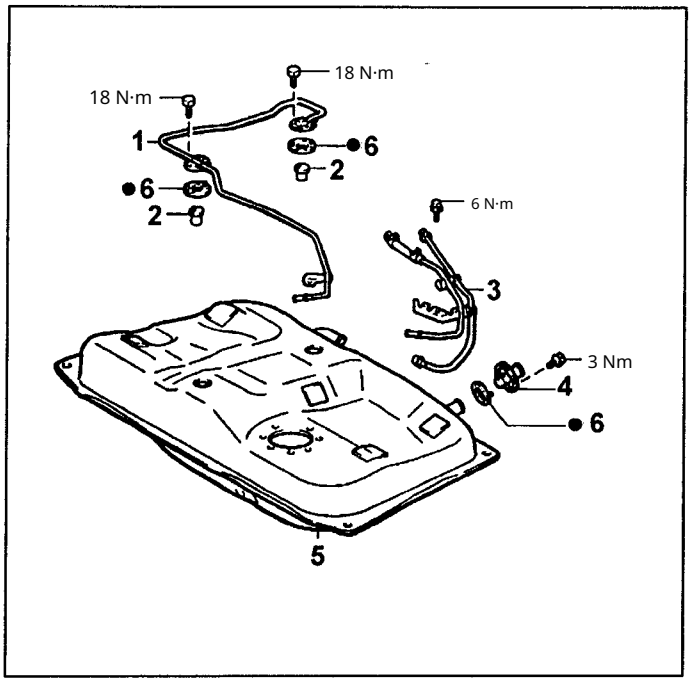

4A-CE. 1 - reserve line, 2 - fuel shut-off valve, 3 - fuel return pipe, 4 - adapter, 5 - fuel tank, 6 - gasket.

Injectors

Engine inspection

1. Check the injectors' operation by listening.

a) With the engine running or being cranked with the starter, use a stethoscope to confirm by ear (by the sound of injected fuel) that the injectors are functioning, ensuring that the injection frequency is proportional to the engine crankshaft speed.

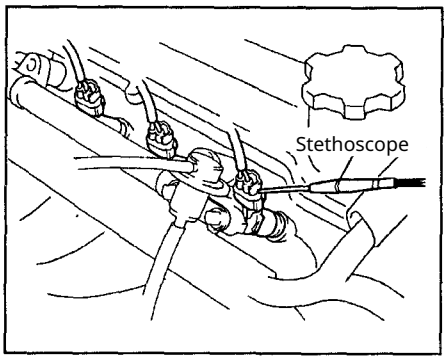

b) If a stethoscope is not available YOU CAN check the injectors' operation by touching them with a finger or a screwdriver.

If there is no sound or if the sound is unusual, check the wiring, connector, injector, additional injector resistance, or the presence of a control signal from the electronic control unit.

2. Check the injector resistance. Disconnect the injector connector and, using an ohmmeter, measure the injector's resistance. Rated resistance at 20° C: 13.4 - 14.2 ohms

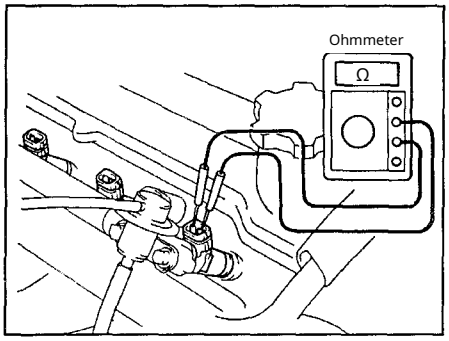

4A-FE, 7A-FE.

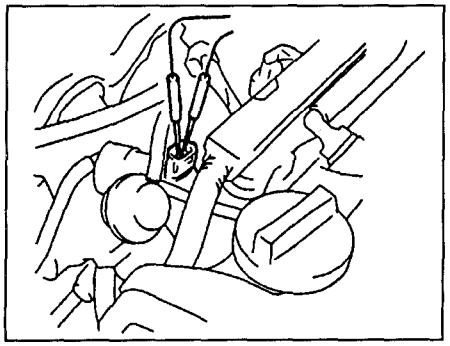

4A-GE.

If the resistance value falls outside the specified limits, replace the injector. Reconnect the injector connector.

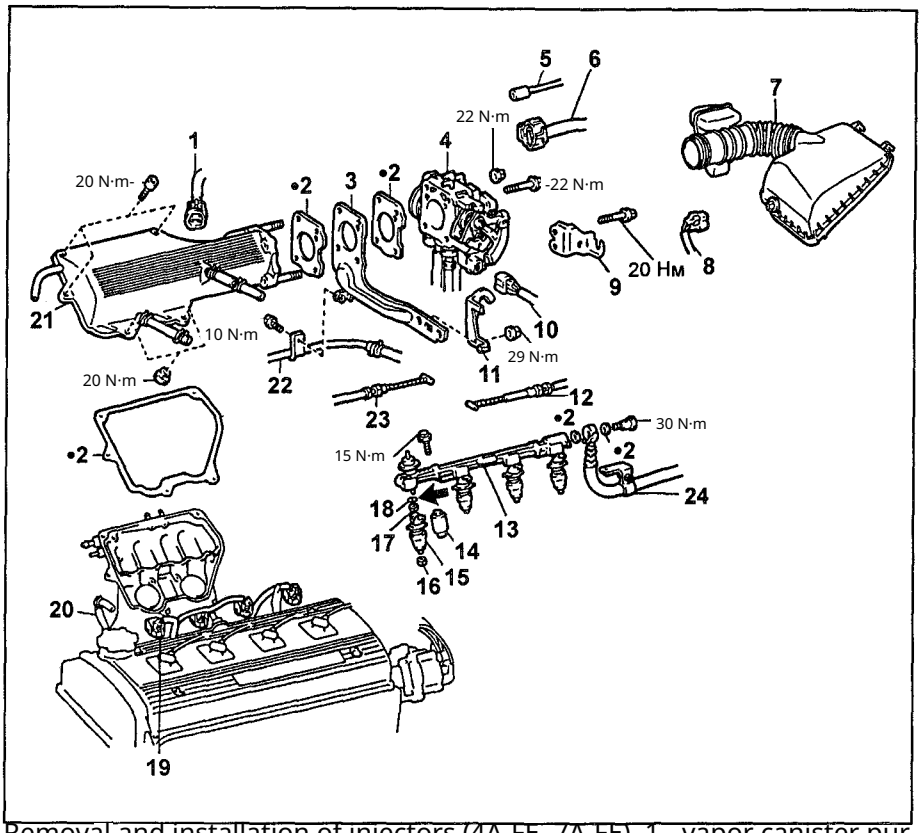

Removal and installation of injectors (4A-FE, 7A-FE). 1 - vapor canister purge valve connector, 2 - gasket, 3 - upper intake manifold support bracket, 4 - throttle body, 5 - vacuum hose for the vapor canister purge system, 6 - throttle body, 7 - sensor connector - air cleaner cover with intake duct, 8 - intake air temperature sensor, 9 - throttle - valve control cable bracket, 10 - idle speed valve connector, 11 - engine lifting hook No. 2, 12 - throttle valve control cable (automatic transmission), 13 - fuel rail, 14 - spacer, - 15 - injector, 16 - insulator, 17 - protective sleeve, 18 - O-ring, 19 - injector connector, 20 - fuel return hose, 21 - upper intake manifold cover, 22 - fuel pipe, - 23 - accelerator cable, 24 - inlet fuel hose.

Injector removal

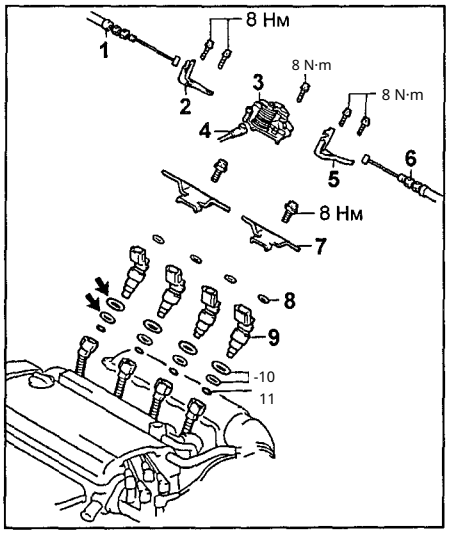

Removal and installation of injectors (4A-GE). 1 - accelerator cable, 2 - bracket, 3 - throttle linkage rod, 4 - rod bracket, 5 - bracket, 6 - throttle valve control cable (automatic transmission), 7 - injector cover, 8 - insulator, 9 - injector, 10 - O-ring seal, 11 - insulator. -

4A-FE, 7A-FE

1. Disconnect the (-) cable from the negative terminal of the battery.

2. Drain the coolant.

3. Remove the cover air of the air filter with the air duct.

4. Disconnect the accelerator cable from the throttle drive.

5. (Models with automatic transmission) Disconnect the throttle valve control cable from the throttle drive. 6. Disconnect the connectors for the idle speed control valve and the throttle position sensor.

7. Remove the throttle body elephants (female)

8. Remove the engine lifting hook and the upper intake manifold bracket.

a) Unscrew the bolt (or bolts) and remove the air tube and the fuel hose.

b) After loosening the bolt and nut, remove the engine lifting hook and the upper intake manifold bracket with the gasket.

9. Remove the upper intake manifold cover.

a) Disconnect the two crankcase ventilation hoses.

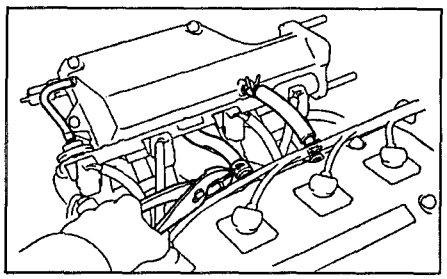

b) Disconnect the hose of the absolute pressure sensor in the intake manifold.

c) Using a socket wrench with a 6 mm socket, unscrew the three bolts and two nuts and remove the upper intake manifold cover together with the gasket.

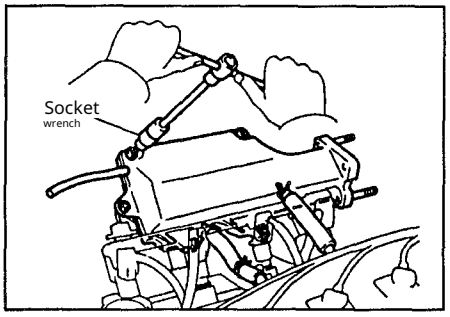

10. Disconnect the fuel return hose from the fuel pressure regulator.

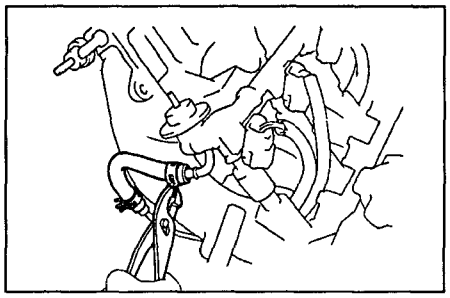

11. Unscrew the bleed bolt with its gaskets and disconnect the fuel feed pipe from the fuel rail.

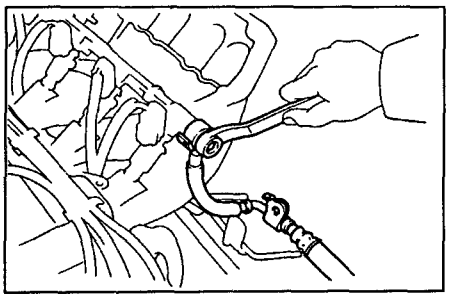

12. Disconnect the injector electrical connectors.

13. Remove the fuel rail and injectors.

a) Unscrew 2 or 3 bolts and remove the fuel rail together with the injectors.

Note: be careful not to drop the injectors when removing the fuel rail.

b) Remove 4 insulators and 2 or 3 spacers from the cylinder head.

c) Extract the injectors from the fuel rail.

g) Remove the O-ring seals and protective sleeves from each injector.

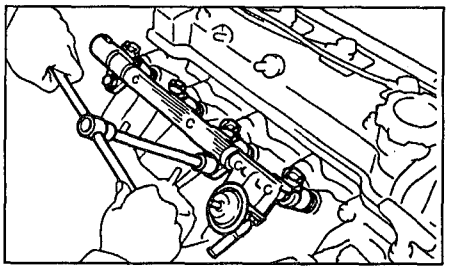

Injector inspection

4A-FE, 7A-FE

1. Inspect the injectors; check the inlet screen for dirt with a matchstick, and if present, blow it clean with air. 2. Check the injectors' spray quality.

Note: Prevent sparking during tests. Keep a fire extinguisher ready.

a) Prepare the necessary service tools and fixtures.

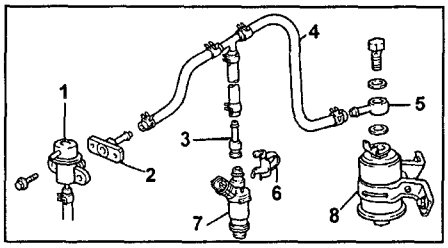

Injector inspection diagram (4A-FE, 7A-FE). 1 - fuel pressure regulator (remove from the vehicle), 2 - adapter fitting to the regulator, adapter fitting to the injector, 3 - service hose, 4 - adapter fitting to the fuel filter, 6 - clamp for securing the injector, 7 - injector, 8 - fuel filter, b) Disconnect the fuel inlet hose from the fuel filter. c) Connect the adapter fitting (3) and the service hose (4) to the outlet port of the fuel filter (2) using bolt (5), installed together with new gaskets (6). Tightening torque 29 N·m Note: THE vehicle's fuel filter MAY be used.

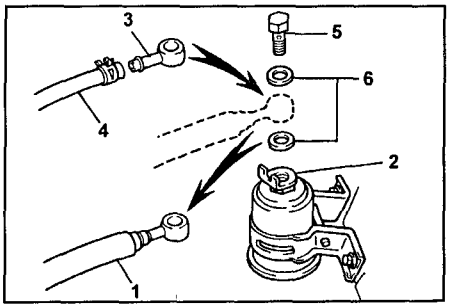

g) Disconnect the fuel pressure regulator from the fuel manifold and connect a service hose to it using an adapter fitting, fastening it to the regulator with 2 bolts. Tightening torque 9 N·m Connect the fuel return hose to the regulator. Note: install new gaskets on the pressure regulator.

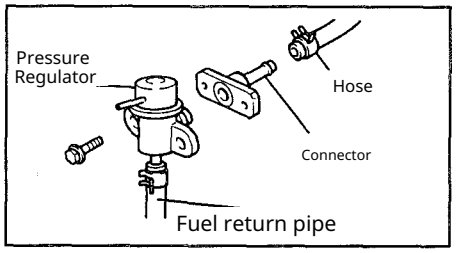

d) Install a new protective sleeve and a new O-ring (1) onto the injector (2). e) Connect the adapter fitting (3) and the service hose (4) to the injector (2), secure the injector using the retainer (5).

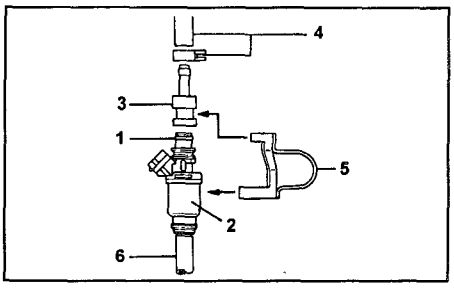

j) Place the injector into a graduated container. Put a suitable vinyl hose (6) onto the injector to prevent splashing.

3) Connect the (-) cable to the negative (-) terminal of the battery and switch the ignition on. Note: do not start the engine.

i) Short the "FP" and "+B" terminals of the diagnostic connector with a jumper. k) Connect the service lead to the injector and the battery for 15 s, and measure the volume of fuel injected into the graduated container. Repeat the test 2–3 times for each injector. Injected fuel volume: 4A-FE (up to 1997), 7A-FE ..... 54–64 cm³ per 15 s 4A-FE (from 1997) ..... 39–49 cm³ per 15 s Variation in delivery between injectors: up to 5 cm³. If the fuel delivery is outside the allowable limits, replace the injector. 3. Check for leaks.

a) After completing the previous check, disconnect the battery cables and check for fuel leakage through the injector. Leak... no more than 1 drop per 1 minute

b) Turn off the ignition, remove the jumper from the diagnostic connector and disconnect the negative (-) cable from the negative battery terminal. c) Remove the adapter fittings and service hoses.

g) Connect the fuel hose to the outlet of the fuel filter, tightening the bypass bolt. Tightening torque... 29 N·m 4. Check the operation of the injectors

a) Apply 12 V from the battery to the injector and, by a "dry" crisp click, determine the injector's condition. If a dull or unclear click is present, the injector must be cleaned.

Attention:
- A large current flows through the injec tor coil, so power must not be applied to it for a long time (more than 0.5 s); other wise it will overheat and burn out.
- Voltage should be applied briefly (touc h the lead to the terminals and immediate ly remove it). 4A-GE

1. Remove the throttle body assembly t ogether with the fuel rail and injectors.

2. Connect the fuel rail to the fuel filter using a s ervice hose and adapter fittings.

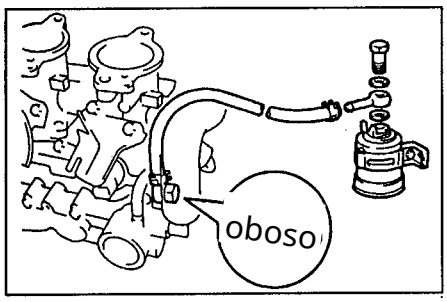

3. Short the "FR" and "+B" terminals of t he diagnostic connector.
4. Turn the ignition to ON. 5.
Connect the service lead to the injector and the battery for 15 s, measure the vo lume of fuel injected into a calibrated ve ssel. Repeat the test 2–3 times for each i njector.

Injected fuel volume
fuel ..... 65–82 cm³ per 15 s

4. Check for leaks.
a) After completing the previous chec k, disconnect the battery cables and c heck for fuel leakage through the inje ctor.

Leakage no more than 1 drop per 1 minute

Injector installation

4A-FE, 7A-FE

1. Install the injectors and the fuel rail.

a) Install a new sealing sleeve on the injector (if removed).

b) Apply a thin layer of lubricant (Lith ol) to the new O-ring seal and install i t on the injector. c) While turning the injectors, insert them into the fuel ra il.

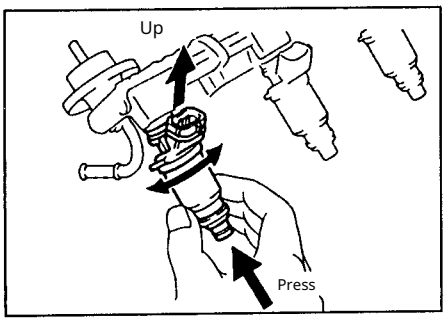

d) Install (preferably glue) the four insul ators and two spacers.

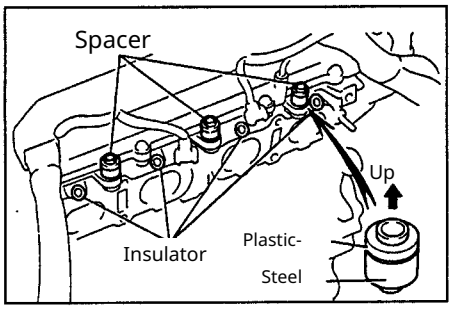

d) Install the injectors together with the f uel rail onto the intake manifold. Gradua lly tighten the fasteners that secure the f uel rail to the intake manifold.

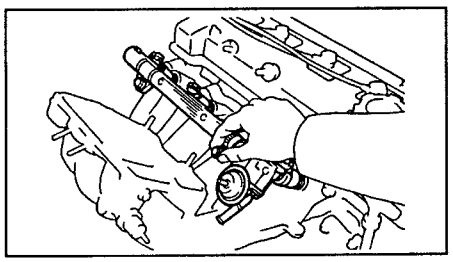

4A-FE, 7A-FE.

e) Make sure the injectors rotate freely in their seating areas without sticking.
locations.

Note: if the injectors do not rotate, the O-rings may be installed incorrectly. Re place the O-rings. f) Install the injectors so that their connectors face upwa rd.

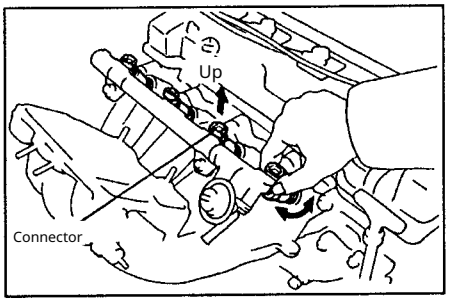

3) Fasten the fuel rail to the cylinder hea d with bolts. Torque: 17 N·m
.....

2. Connect the electrical connectors to the inje ctors.
3. Attach the inlet fuel hose to the intake manifold: install the bypass bolt (with 2 n ew gaskets) and tighten it. Tightening tor que
..... 29 N·m

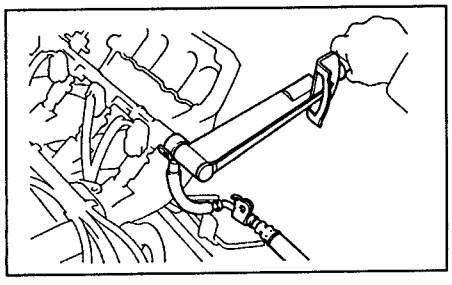

4. Connect the fuel return hose to the fuel p ressure regulator. 5. Install the upper part of the intake manifold.

Install a new gasket and use a 6 mm socke t wrench to tighten 3 bolts and 2 nuts in th e sequence shown.
on

in the figure.

Tightening torque.. ..... 19 Н·м

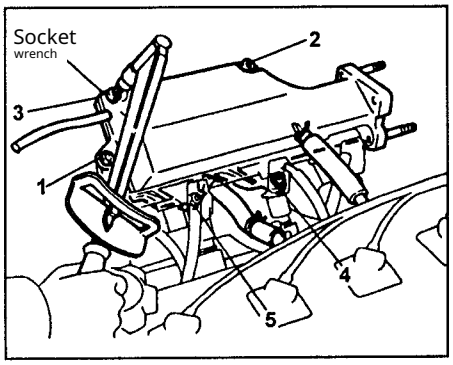

6. Connect the hoses of the crankcase ventilation system.
7. Connect the hose of the absolute press ure sensor to the intake manifold.

8. Install the upper intake manifold stay.
a) Place a new gasket on the flange of the upper intake manifold so that the protrusion on the gasket faces downward.

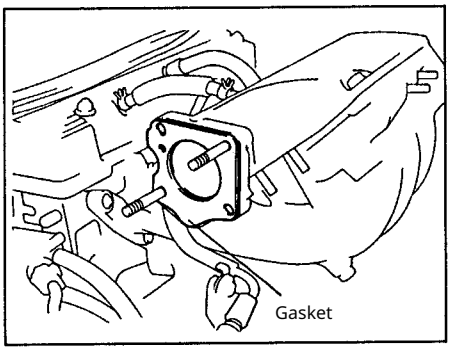

b) Fasten the upper intake manifold s tay and the engine transport hook (ey e) with a bolt and nut. Tightening tor que...28 N·m Not
e: use a new bolt and a new nut.

c) Fasten the air bypass tube and th e inlet fuel hose with a bolt (or two b olts).
9. Install the throttle body housing
elephants (female)

10. Connect the throttle cable to the drive throttle body housing.
11. Connect the throttle control cable.

12. Install the air filter cover and the air duc t.
13. Fill the cooling system with coolant.

Air intake system Throttle body (4A-FE, 7A-FE)

Engine inspection

1. Clean the soiled parts of the throttle body using a soft brush and carburetor cleaner. Use compressed air to blow o ut all passages and holes.

Note: Do not clean the throttle position sens or to avoid damaging it.

2. Ensure there is no clearance between the throttle stop adjustment screw and the thr ottle lever when the throttle is fully closed.

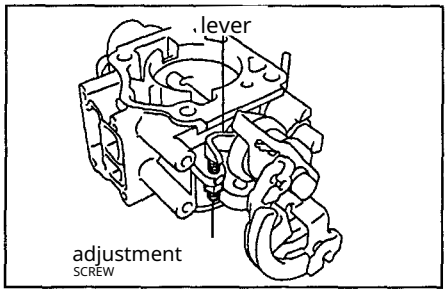

Adjust the clearance if necessary.

a) Loosen the locknut and unscrew th e adjustment screw. b) Set the throttle valve to the fully closed positi on. c) Turn in the adjustment screw u ntil it contacts the lever, then turn it a n additional 1/4 turn. d) Tighten the l ocknut. e) Check and adjust t he throttle position sensor. Re moval and installation of the throttle body 1. Disconnect the (-) cable fr om the negative terminal of the battery

tarey.

2. Drain the coolant from the engine.

3. Disconnect the accelerator cable.

4. (Models with automatic transmission) Disconnect the throttle valve contro l cable. Note: Mark the positions of the a djustment nuts; otherwise, if they are po sitioned incorrectly, the automatic trans mission will shift gears at different engin e speeds.

5. Disconnect the intake air temperature sensor from the air filter housing.

6. Remove air cover filters and air duct.

7. Remove the throttle body by disconnecting i t from the intake manifold.

a) Disconnect the throttle position senso r connector.

b) Disconnect the connector of the sp eed control system valve idle speed.

c) Disconnect the air hoses from the thro ttle body. Note: The hoses can be easi ly swapped when reconnecting, so mark th em before removal.

g) Unscrew the bolts and nuts fastening the throttle body housing. Tightening torque.. .22 N·m

.....

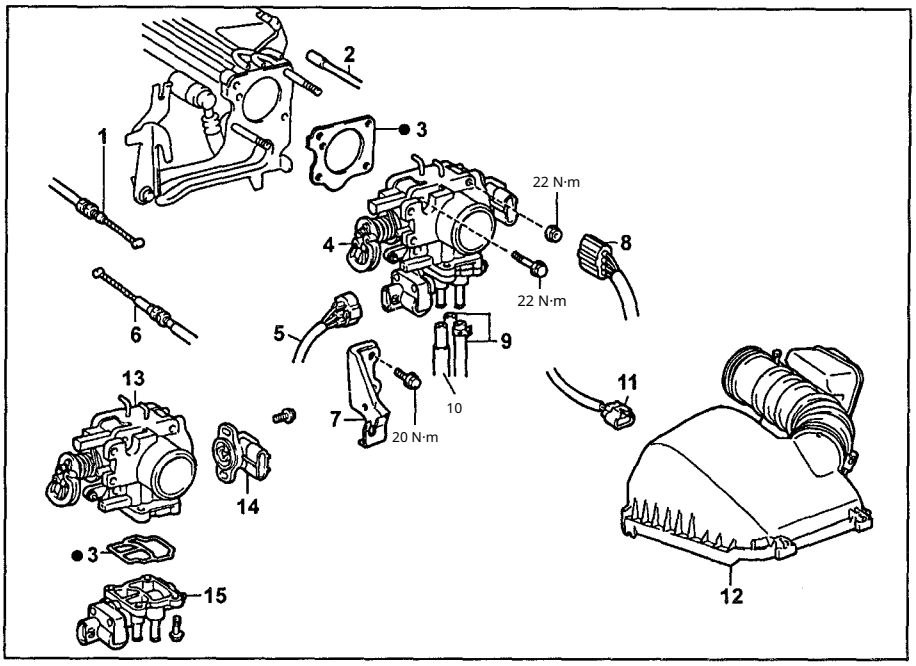

Throttle body assembly (4A-FE, 7A-FE). 1 Accelerator cable, 2 — vacuum hose for the fue l vapor recovery system, 3 — gasket, 4 — throttle body assembly, 5 — connector for the idle speed control valve, 6 — throttle control cable (automatic transmission), 7 — cable bracket, 8 — connector for the throttle position sensor, 9 — coolant bypass hoses, 10 — air hose, 11 — intake air temperature sensor connector, 12 — air cleaner cover with du ct, 13 — throttle housing, 14 — throttle position sensor, 15 — idle speed control system valve.

d) Disconnect the throttle body from the i ntake manifold and remove the gasket.

e) Disconnect the coolant bypass an d air hoses from the throttle body.

Note: The throttle body is installe d in the reverse order of removal. Dis assembly of the throttle body

elephants (female or young elephants in Russian: "слонки")

1. Remove the idle speed control valve by unscrewing the 4 mounting screws. 2. Re move the throttle position sensor b y unscrewing the 2 mounting screws.

Checking the throttle position sensor (4A-FE (until 1997) and 7 A-FE) 1. Check the throttle position sensor.

a) Insert a flat feeler gauge 0.4 mm or 0.9 mm thick between the throttle stop adju stment screw and the lever.

b) Using an ohmmeter, measure the resis- tance between the corresponding We output the sensor connector terminals for various throttle positions flaps.

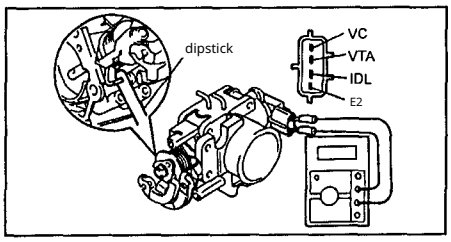

Gap, Resistance Leads (thickness of the dipstick), mm		nie, kom
0,4	IDL-E2 conductivity	Tь
0,9	IDL-E2	∞
0	VTA-E2	0,2 - 5,7
Throttle valve com- pletely open- open	VTA-E2	2,0 - 10,2
-	VC-E2	2,5 - 5,9

(4A-FE (since 1997))

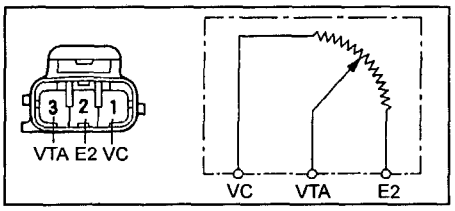

Check the throttle position sensor by measuring the resistance between th e corresponding terminals of the sen sor connector at various throttle posit ions.

Throttle Terminals Resistance throttle operation, com		
fully VTA-E2 0.2–5.7 closed		
completely VTA-E2 2.0 - 10.2 open		
-	VC-E2	2,5 - 5,0

Installation and adjustment of the throttle p osition sensor 1. Set the throttle valve to the fully closed position. 2. Set the sensor to the initial position, rotate it 60–120° counterclockwise, insert it into the throttle body, then rotate it clockwise and tighten t he mounting screws.

3. (4A-FE up to 1997, 7A-FE) Adjust the throttle position sensor
flaps.

a) Loosen the two sensor mounting screws.

b) Insert a flat feeler gauge 0.4 mm thic k between the throttle adjustment scre w and the stop lever.

c) Connect the ohmmeter to the "IDL" and "E2 " terminals of the sensor.

g) Gradually turn the sensor clockwise u ntil the ohmmeter changes its readings, and secure it in this position with two s crews.

d) Check the conductivity between the "I DL" and "E2" terminals.

Gap between re-gulirovochnym with a screw and a lever	Electrical conductivity me-waiting for outputs "IDL" and "E2"
0.4 mm	yes
0.9 mm	no

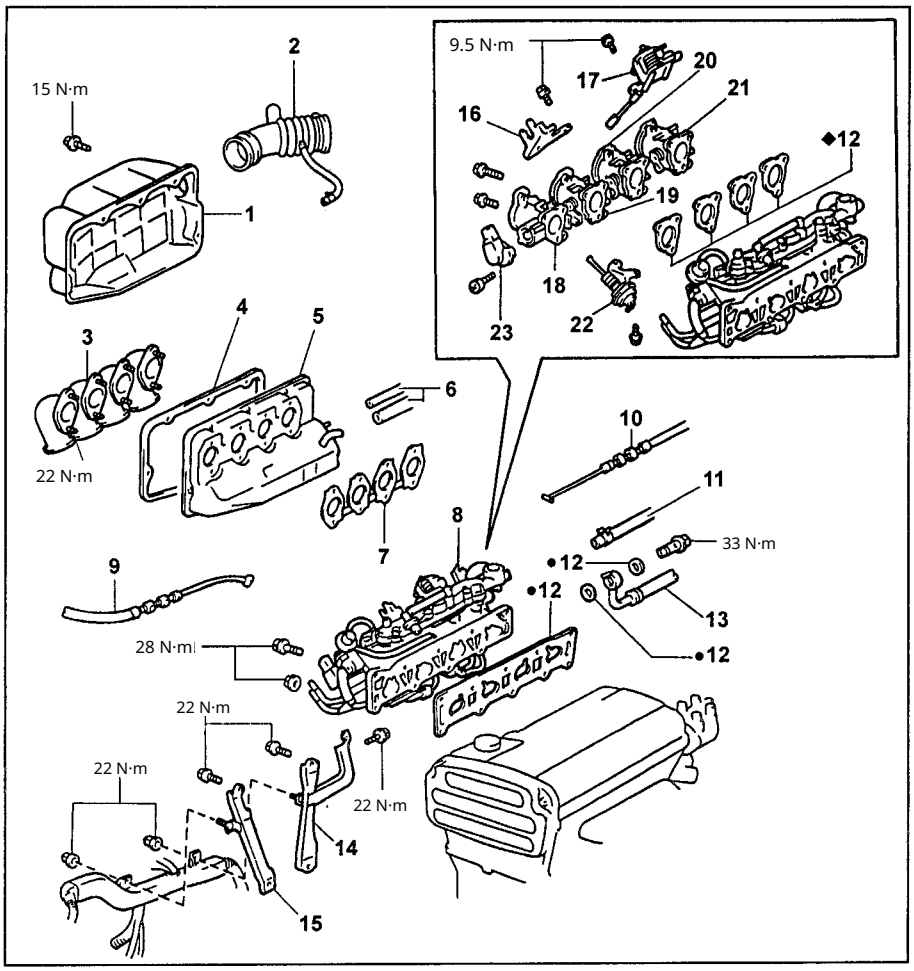

Throttle body housing (4A-GE). 1 intake chamber cover, 2 - air duct, 3 - hoses, 4 - gasket, 5 - air intake chamber, 6 - vacuum hoses, 7 - gas ket, 8 - intake manifold assembly, 9 - accelerator cable, 10 - throttle control cable , 11 - fuel return hose, 12 - gasket, 13 - inlet fuel hose, 14 - manifold stand No. 1, 15 - manifold stand No. 2, 16 - bracket, 17 - flap control mechanism, 18, 19, 20, 2 1 - throttle body housings No. 1, 2, 3, 4 respectively, 22 - throttle dampener, 23 - throttle position sensor.

Throttle body housing
throttle plates (4A-GE)
Removal and installation

1. Disconnect the negative terminal from the battery.

2. Disconnect the accelerator cable. 3. D isconnect the throttle valve control cable (a utomatic transmission).

4. Disconnect the fuel inlet
hose.

5. Disconnect the fuel return hose
liva.

6. Disconnect the crankcase ventilation hoses.

7. Remove the air filter cover.

8. Remove the air intake chamber.

a) Remove the air intake chamber cov er by unscrewing 5 bolts.

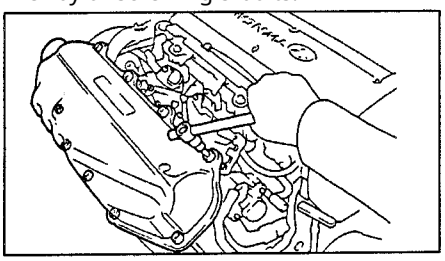

b) Disconnect the intake hoses by unscr ewing 8 mounting bolts. Tighte ning torque.. .....22 Н·м

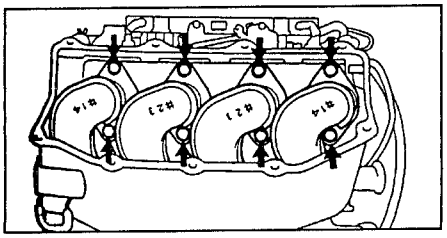

b) Disconnect the vacuum hoses. g) U nscrew the bolt and remove the air inta ke chamber.

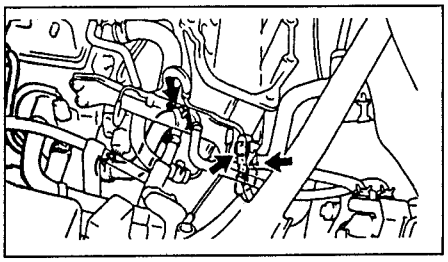

9. Remove the air intake chamber stands.

a) Unscrew the two nuts and remove the wiring harn ess with its protective cover.

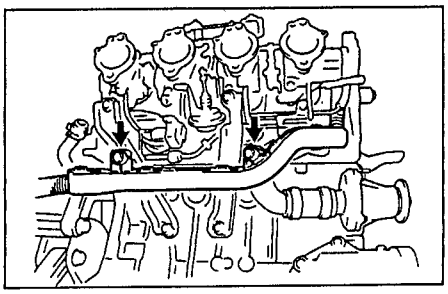

b) Unscrew 4 bolts and remove the supp ort stands.

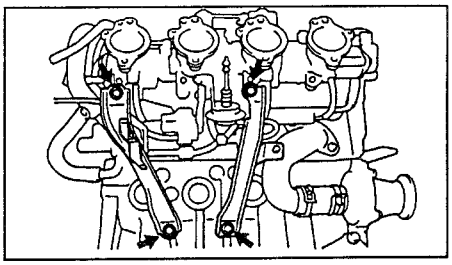

10. Remove the throttle body housing.
throttle valves.

a) Disconnect the injector connectors.

b) Unscrew 2 bolts and remove the wiri ng harness cover.

c) Unscrew 7 bolts and 2 nuts and remov e the throttle body housing.

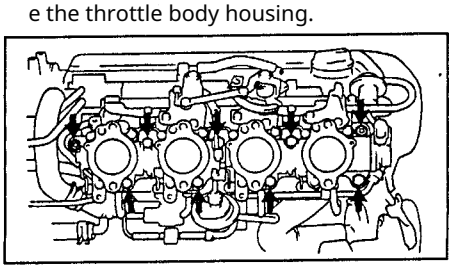

Adjustment

1. Throttle body adjustment

flaps.

a) Turn the throttle stop screws to the fully closed position.

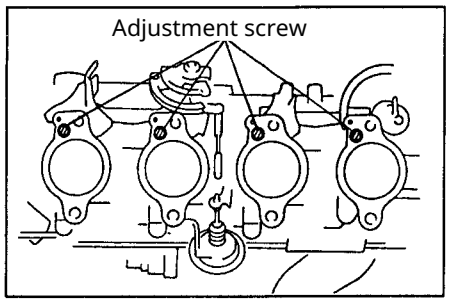

b) Using a special tool, with the engine idling, set the screw to the position where the channel allows the maximum airflow to pass through.

c) Set the remaining valves to the same position.

Note: do not fully unscrew the adjusting screws.

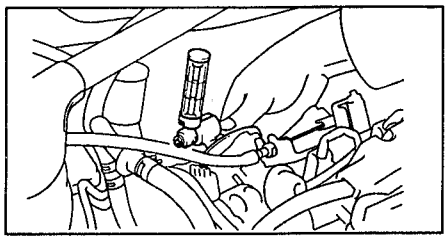

Throttle body inspection

throttle valve No. 1

1. Throttle opening mechanism.

throttle.

a) Operate the throttle opening mechanism. re-

elephants (female)

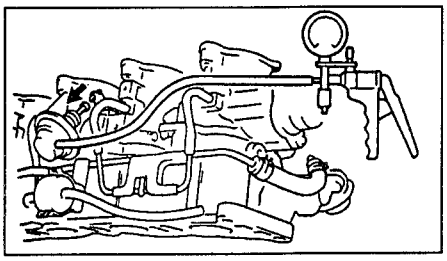

b) Loosen nut "A".

B) Using a hex socket wrench, adjust the clearance by turning the adjusting screw. Specified clearance.

.....0.03 mm

c) Tighten nut "A" and recheck the clearance.

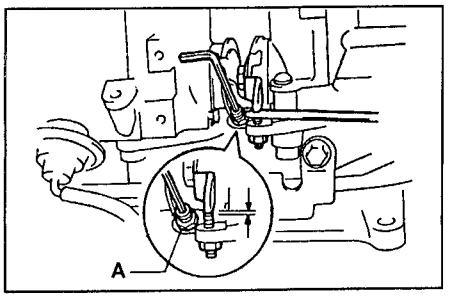

d) Set the throttle valve to the fully open position.

e) Secure the throttle actuator in this position with wire, as shown in the illustration.

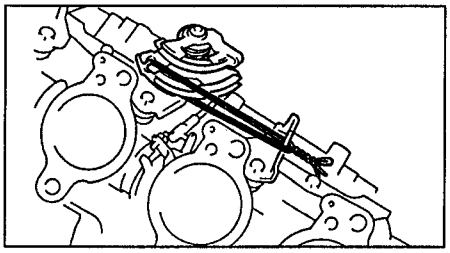

Note: prevent foreign objects from entering the throttle body. zh) Loosen nut "B". 3) Turn the adjusting screw until the gap is 0 mm. ii) Turn the adjusting screw in by 1/2–1/3 of a turn and tighten nut "B".

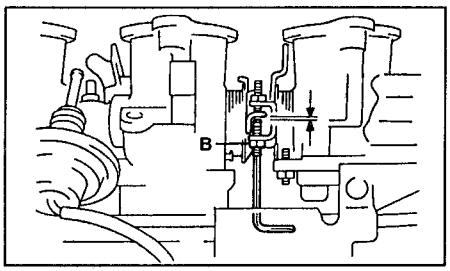

Specified clearance .....0.15–0.25 mm k) Remove the special tool and the wire and return the throttle valve to the fully closed position.

3. Throttle position sensor

elephants (female)

Installation of the throttle position sensor.

a) Make sure that the throttle valve is in the fully closed position.

b) Install the sensor in the position shown by the dashed line in the illustration (20–30° counterclockwise from the original position), insert it into the throttle body, then turn it clockwise and temporarily tighten the mounting screws.

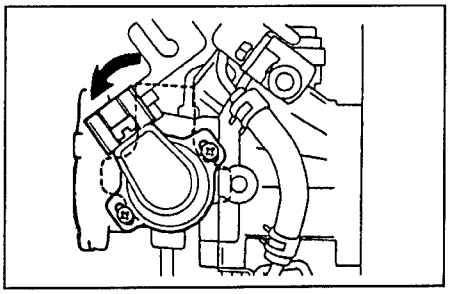

Throttle position sensor adjustment. position

a) Insert a flat feeler gauge 0.9 mm thick between the throttle stop adjustment screw and the lever.

Ensure there is continuity between terminals "IDL" (3) and "E2" (4). If there is no continuity, rotate the sensor clockwise until continuity appears.

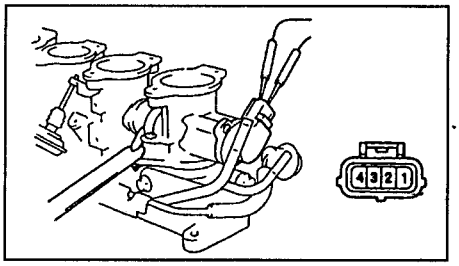

b) Slowly rotate the sensor counterclockwise until conductivity disappears and secure it in that position.

c) Measure the resistance and voltage between the sensor terminals.

d) Mark the adjusting screw with paint.

Throttle Position Sensor

inspection

a) Insert flat feeler gauges 0.8 mm or 1.0 mm thick alternately between the adjustment screw of the stop and the throttle lever.

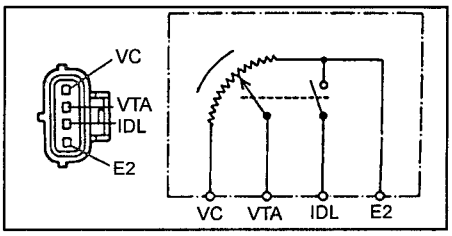

b) Check for continuity between the "IDL" and "E2" terminals using feeler gauges of different thicknesses.

Feeler gauge thickness, mm	Continuity
0,8	Yes
1,0	No

c) Measure the resistance between the "VC" and "E2" terminals. Nominal resistance: 4.

3 - 8.3 kΩ .....

g) Measure the resistance between the "VTA" and "E2" terminals at different throttle valve positions.

elephants (female)

Throttle valve	Resistance, kΩ
	Resistance, kΩ
Fully closed	0,3 - 6,3
Fully open	3,5 - 10,3

Inspection of Throttle Valve Body No. 2

1. Throttle opening mechanism.

throttle.

a) Loosen nut "A".

c) Using a hex socket wrench, adjust the clearance by turning the adjustment screw. Nominal clearance: 0.03 mm

.....

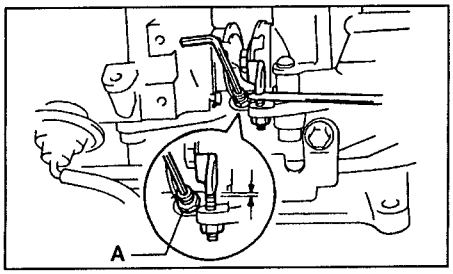

c) Tighten nut "A" and re— 2. Install the opening mechanism—
Check the clearance.
d) Loosen nut "C".
e) Using a hex socket wrench, adjust the clearance by turning the adjustment screw.

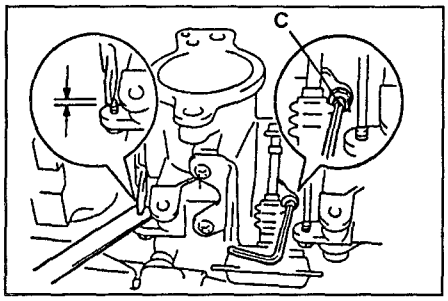

Specified clearance. ..... 0.03 mm
g) Tighten nut "C" and re-check the clearance.
3) Loosen nut "D".
i) Using a hex socket wrench, adjust the clearance by turning the adjustment screw.

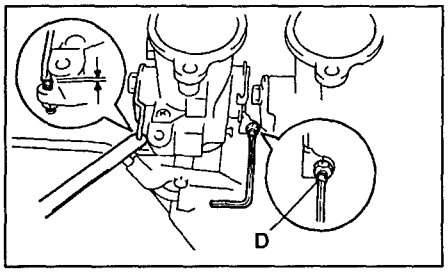

Nominal clearance ..... 0.03 mm
k) Tighten nut "D" and recheck the clearance.
l) Set the throttle valve to the fully open position. m) Secure the throttle valve drive in this position with wire.

n) Loosen nut "B".
o) Turn the adjustment screw so that the clearance becomes 0 mm. p) Turn adjustment screw "B" 1/2–1/3 turn and tighten nut "B".

Specified clearance: 0.15–0.25 mm r) Remove the special tool and the wire and return the valve to the fully closed position. s) Loosen nut "E".

t) Turn the adjustment screw so that the clearance becomes 0 mm. u) Turn adjustment screw "E" 1/2–1/3 turn and tighten nut "E".

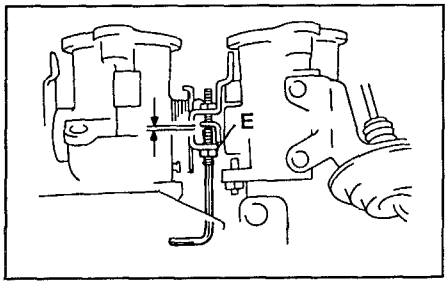

Specified clearance.....0.15–0.25 mm F) Remove the special tool and the wire and return the valve to the fully closed position.

Adjust the throttle valve so that the mechanism linkage contacts the adjustment screw.
3. Adjustment of the throttle valve opening mechanism. a) Loosen the nut.
b) Using a flat feeler gauge and the adjusting screw, set the clearance as shown in the illustration.

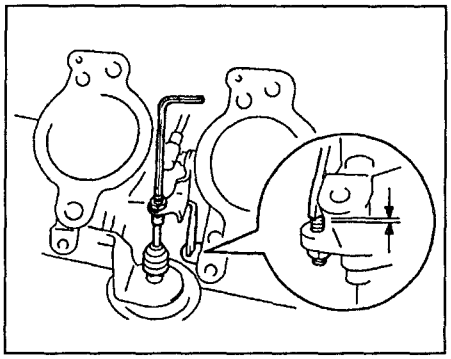

Rated clearance G☒WHALE0.56–0.70 mm
c) Reinstall the throttle body flaps.

Inspection of throttle body No. 3

1. Throttle opening mechanism. throttle.
a) Loosen nut "C".
b) Using a hex socket wrench, adjust the clearance by turning the adjusting screw. Rated clearance 0.03 mm .....
c) Screw in nut "C" and recheck the clearance.
d) Loosen nut "D".
e) Using a hex socket wrench, adjust the clearance by turning the adjustment screw. Nominal clearance 0.03 mm .....
f) Tighten nut "D" and recheck the clearance.
g) Set the throttle valve to the fully open position. 3) Secure the throttle valve actuator in this position using a wire.

h) Loosen nut "E".
k) Turn the adjusting screw so that the clearance becomes 0 mm. l) Turn the adjusting screw "E" back 1/2–1/3 of a turn and tighten nut "E".

Nominal clearance ..... 0.15–0.25 mm m) Remove the special tool and the wire and return the throttle body to the fully closed position.
2. Install the throttle opening mechanism so that the mechanism's rod contacts the adjusting screw.

3. Adjustment of the throttle opening mechanism.
a) Loosen the nut.
b) Using a flat feeler gauge and the adjusting bolt, set the clearance.

Nominal clearance ..... 0.56–0.70 mm

Inspection of throttle body No. 4

1. Throttle opening mechanism. throttle.
a) Loosen nut "D".
b) Using a hex socket wrench, adjust the clearance by turning the adjusting screw. Rated clearance 0.03 mm .....
c) Tighten nut "D" and recheck the clearance.
d) Move the throttle valve to the fully open position. e) Secure the throttle drive in this position with wire.

f) Loosen nut "E".
g) Turn the adjustment screw so that the gap becomes 0 mm.
3) Screw the adjustment screw "E" in by 1/2–1/3 turn and tighten nut "E".

Nominal clearance... 0.15–0.25 mm e) Remove the special tool and the wire and return the throttle valve to the fully closed position. Idle speed control valve

On-vehicle inspection

1. Check the winding resistance valve.
a) Disconnect the valve connector. b) Using an ohmmeter, measure the resistance between the "+B" terminal and the "ISC1", "ISC2" terminals of the connector. Nominal resistance:
at 50–100°C. ..... 22–29 Ω 17–2
at -10 to +50°C. ..... 5 Ω If the resistance value falls outside the specified limits, replace the valve.

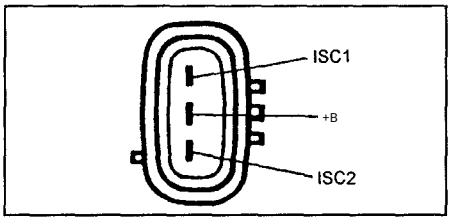

c) Connect the valve connector.
Removing the valve
1. Remove the throttle body cover— elephants (female)
2. Remove the idle speed control valve together with the gasket by unscrewing the mounting screws. Valve inspection

1. Connect a lead from the positive (+) terminal of the battery to the "+B" terminal, and connect the negative (-) lead to the "ISC1" terminal of the valve connector, and make sure the valve actuator is closed.

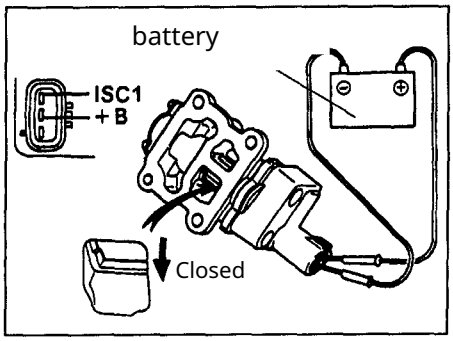

2. Connect a lead from the positive (+) ter minal of the battery to the "+B" terminal, a nd connect the negative (-) lead to the "ISC 2" terminal of the valve connector, and ma ke sure the valve actuator is open.

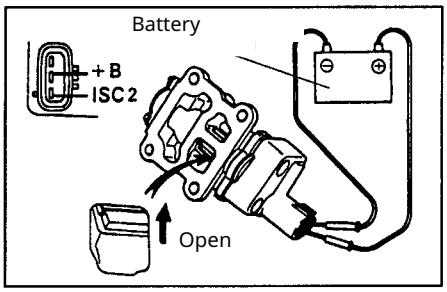

If the valve's operation differs from the desc ription, first clean the valve and repeat the i nspection procedures. If necessary, disasse mble the valve and eliminate the cause of sti cking; otherwise, replace the valve.

Valve installation

1. Install the idle speed control valve syste m. a) Place a new gasket on the throttle b ody.

b) Install the valve and tighten the mounti ng screws.

2. Install the throttle body (see above).

Inspection (4A-FE from 1997)

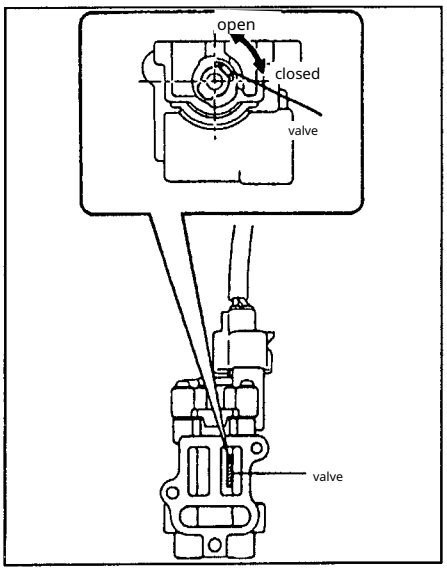

1. Make sure that in the initial position the valve is 50% open.

2. Disconnect the coolant temperature se nsor connector. 3. Connect the idle s peed control valve system connector to t he valve and turn the ignition to ON.

4. Disconnect and then reconnect the ISCV con nector several times. The valve should sequ entially switch from the initial position to fully closed, to fully open, and then back to the initi al position.

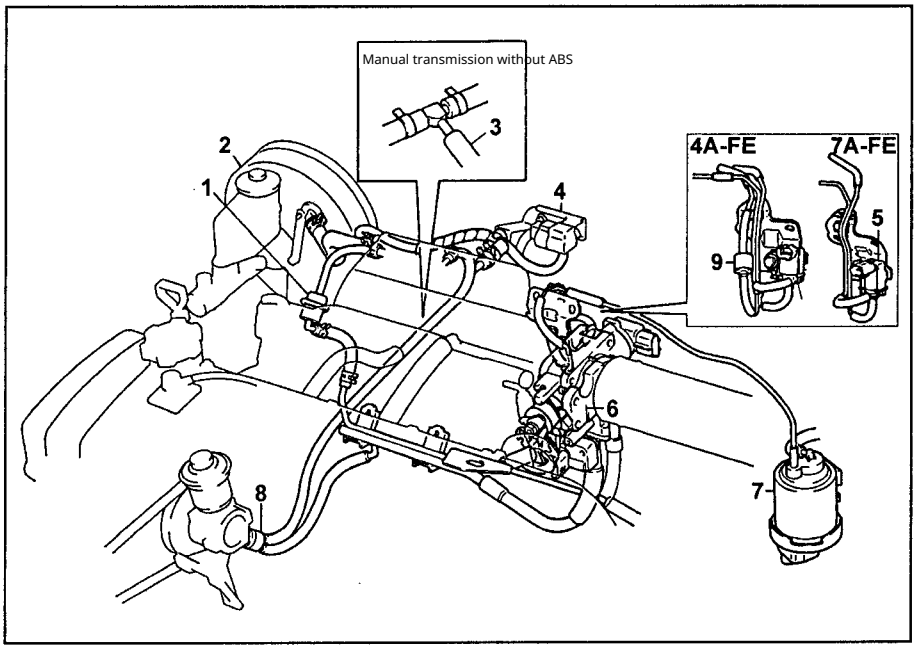

Vacuum line diagram (4A-FE, 7A-FE). 1 - fuel pressure regulator, 2 - brake booster, 3 - to the transmission actuator, 4 - intake manifold absolute pressure sensor, 5 - purge solenoid valve of the evaporative emission control system, 6 - throttle b ody, 7 - charcoal canister, 8 - air control valve (secondary air supply), 9 - check valv e (4A-FE until 1997).

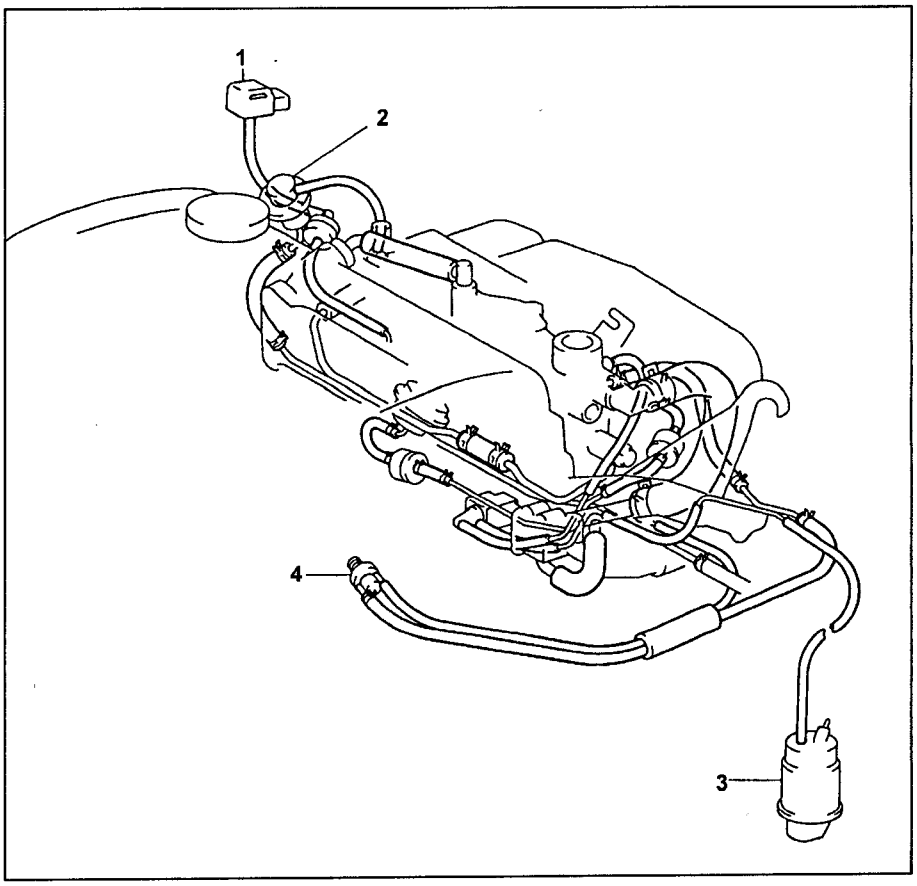

Vacuum line diagram (4A-GE). 1 Intake manifold absolute pressure sensor, 2 - fuel p ressure regulator, 3 - fuel vapor accumulator, 4 - idle speed increase system valve when the power steering is operating.

Electronic control system

Main relay of the fuel injection system

fuel injection

1. Remove the relay block cover and the main-Fuel injection system relay.
2. Check the coil resistance of the relay.

a) Using an ohmmeter, check for continui ty between terminals "1" and "2".

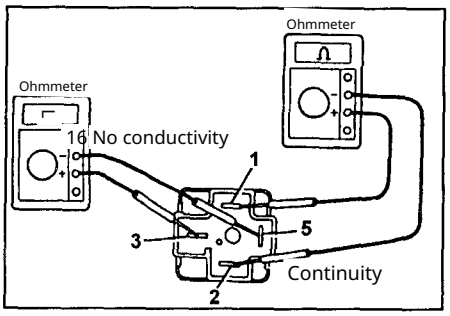

b) Then, using an ohmmeter, verify that t here is no conductivity between terminal s "3" and "5".

3. Check the operation of the relay.

a) Apply voltage from the battery to ter minals "1" and "2" of the relay connect or.

b) Using an ohmmeter, verify the presenc e of continuity between terminals "3" and "5"

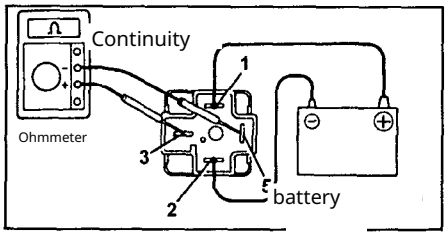

If the conditions specified in items 1 If items 1 and 2 are not functioning, replace the relay. 4. Install the relay and the relay block c over.

Relay switch

fuel pump

1. Remove the fuel-pump relay-switch of the fuel pump.
2. Check the relay electrical circuit using an o hmmeter.

Measure the resistance between the terminals of the fuel pump relay-switch.

Conclusions	Resistance, Ω
"ST" - "E1"	20 - 30
"B" - "FC"	120 - 150
"B" - "FP"	infinity

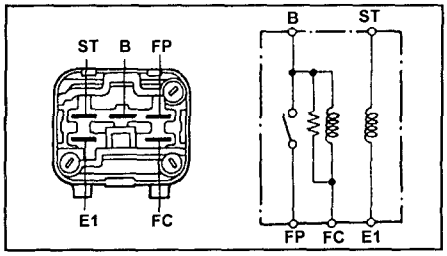

If the specified conditions are not met, re place the relay.

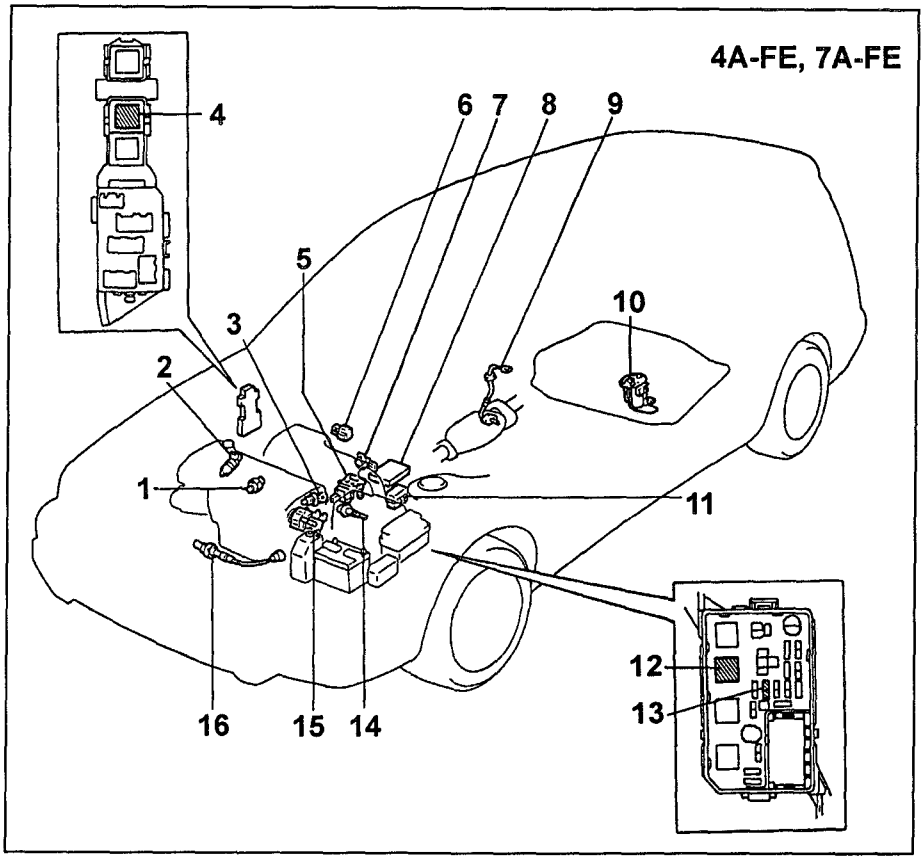

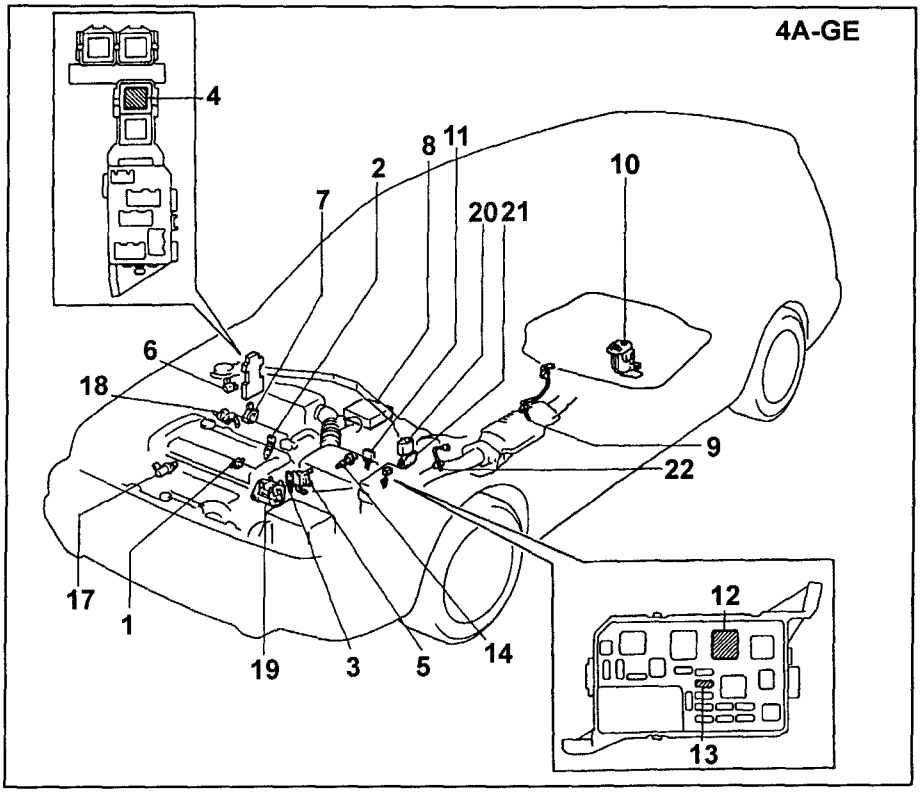

Location of components of the electronic control system. 1 - knock sensor, 2 - injector, 3 - coolant temperature sensor, 4 - fuel pump relay-switch, 5 - fuel pump relay-switch contr ol valve of the idle speed control system, 6 - manifold absolute pressure sensor, 7 - thrott le position sensor, 8 - electronic control unit, 9 - ox ygen sensor, 10 - fuel pump, 11 - diagnostic connector, 12 - main relay, 13 - EFI fuse, 14 - intake air temperature sensor, 15 - combined ignition assembly, 16 - oxygen sensor, 17 - VVT system valve, 18 - fuel pressure regulator, 19 - distributor, 20 - ignition coil, 21 - ignit er, 22 - oxygen sensor.

3. Check the operation of the relay.
Apply voltage from the battery to termin als "ST" and "E1" and using an ohmmeter verify conductivity between terminals "+ B" and "E R"

4. Install the relay.

Coolant temperature sens or and intake air temperature se nsor

Checking the coolant temperature se nsor and the intake air temperature

1. To remove the coolant temperature sensor , drain the coolant.

2. Remove the sensor and disconnect the con nector. 3. Using an ohmmeter, measure the re sistance of the sensors.
4. Use the chart to find the sensor resis tance value (depending on temperatur e) and compare it with the measureme nt results. If the resista nce value falls outside the tolerance ra nge shown on the chart, replace the se nsor. 5. Reinstall the sensor. 6. Refill the coolant (if the coolan t temperature sensor was removed).

7. Using an ohmmeter, measure the resistan ce of the coolant temperature sensor.

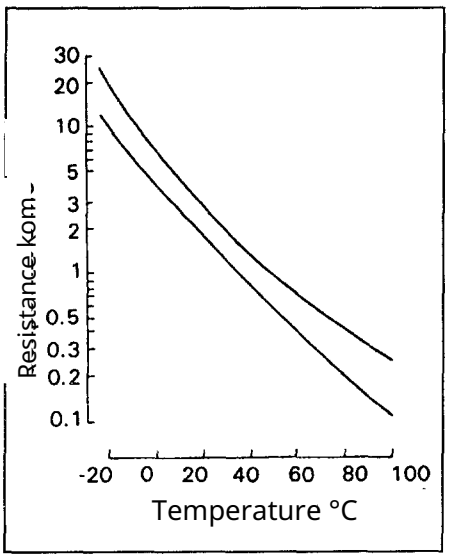

Absolute pressure sensor in the intake manifold

1. Check the sensor power supply of the absolute pressure sensor BO in the intake manifold.
a) Disconnect the sensor connector.
6) Turn the ignition on.
c) Using a voltmeter, measure the voltage between the pins of the sensor connector on the harness side "VS" and "E2".
Rated voltage: 4.5–5.5 V b) Reconnect the s ensor connector.

2. Check the output signal of the intake manifold absolute pressure sensor.
a) Turn on the ignition.
b) Disconnect the vacuum hose from the intake manifold.
c) Connect a voltmeter to the "RIM" and "E2" terminals of the electronic c ontrol unit connector and measure t he output signal voltage at atmosph eric pressure.
g) Gradually bring the pressure supplied to the s ensor step by step within the range from 13.3 kP a to 66.7 kPa.
d) Measure the decrease in volt age for each value of current regulations.

Vacuum, kPa (mmHg)	Voltage dro p, V
13,3 (100)	0,3 - 0,5
26,7 (200)	0,7 - 0,9
40,0 (300)	1,1 - 1,3
53,3 (400)	1,5 - 1,7
66,7 (500)	1,9 - 2,1

Detonation sensor

Checking the detonation sensor

1. Disconnect the cable from the negati ve terminal of the battery.

2. Remove the detonation sensor after disconnecting the sensor connecto rs. 3. Using an ohmmeter, verify there i s no continuity between the sensor con nector and its housing. If continuit y is present, replace the sensor.

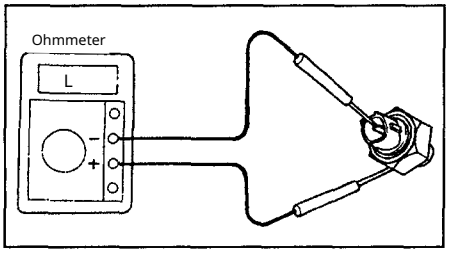

4. Install the knock sensors in reverse- also connect the sensor connectors. Tight ening torque 44 N·m ..... 5. Con nect the cable to the negative terminal of the battery.

Check of the VVT system valve (4A-GE)

Engine inspection

1. Warm up the engine to operating te mperature (80°C).
2. With the engine idling Disconnect the con nector of the VVT system valve.

3. Apply battery voltage to the valve term inals (for 30 seconds) and verify that the i dle becomes unstable.

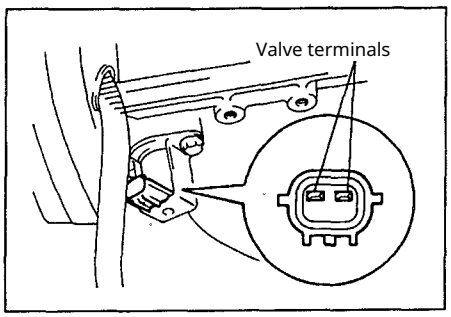

4. Make sure that the voltage at the valv e connector on the wiring harness side disappears when the engine speed is sh arply increased from idle to 6000 rpm (t hrottle fully open).

5. Connect the valve connector.
Check the operation of the valve

1. Apply voltage to the valve terminals of the system- We supply voltage from the battery (for 30 sec.) and make sure that the valve is moved.

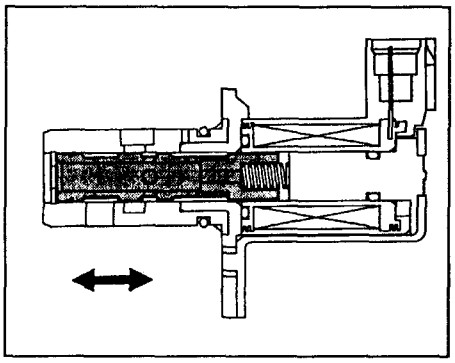

2. Measure the resistance between t he terminals of the VVT system v alve. Rated resistance (at 20° C). ..... 11–13 Ω If the resistance differs from the specified va lue, replace the valve. Oxygen s ensor
1. Warm up the engine to normal oper ating temperature.
2. Measure the magnitude of the oxyge n sensor feedback voltage.
a) Connect the positive lead of the voltm eter to the "VF1" terminal of the diagnos tic connector, and the negative lead to th e "E1" terminal, and
Perform the check according to the algorithm given below.
3. Measure the heater resistance—
Connect the oxygen sensor harness, attaching an ohmmeter to the "+B" and "HT" terminals.

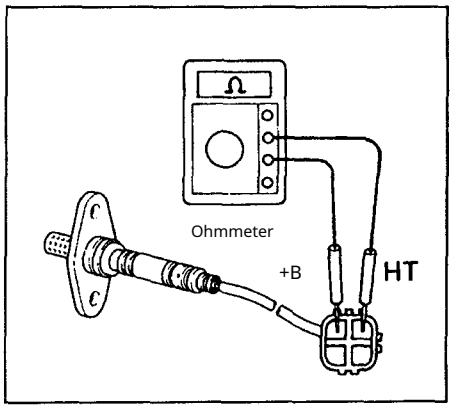

Nominal resistance
(at t = 20°C)..... ..... 11.7 - 14.3 Ω
If the resistance value goes beyond the spe cified limits, replace the oxygen sensor.

Troubleshooting procedure for the oxygen sensor Warm up the oxyg

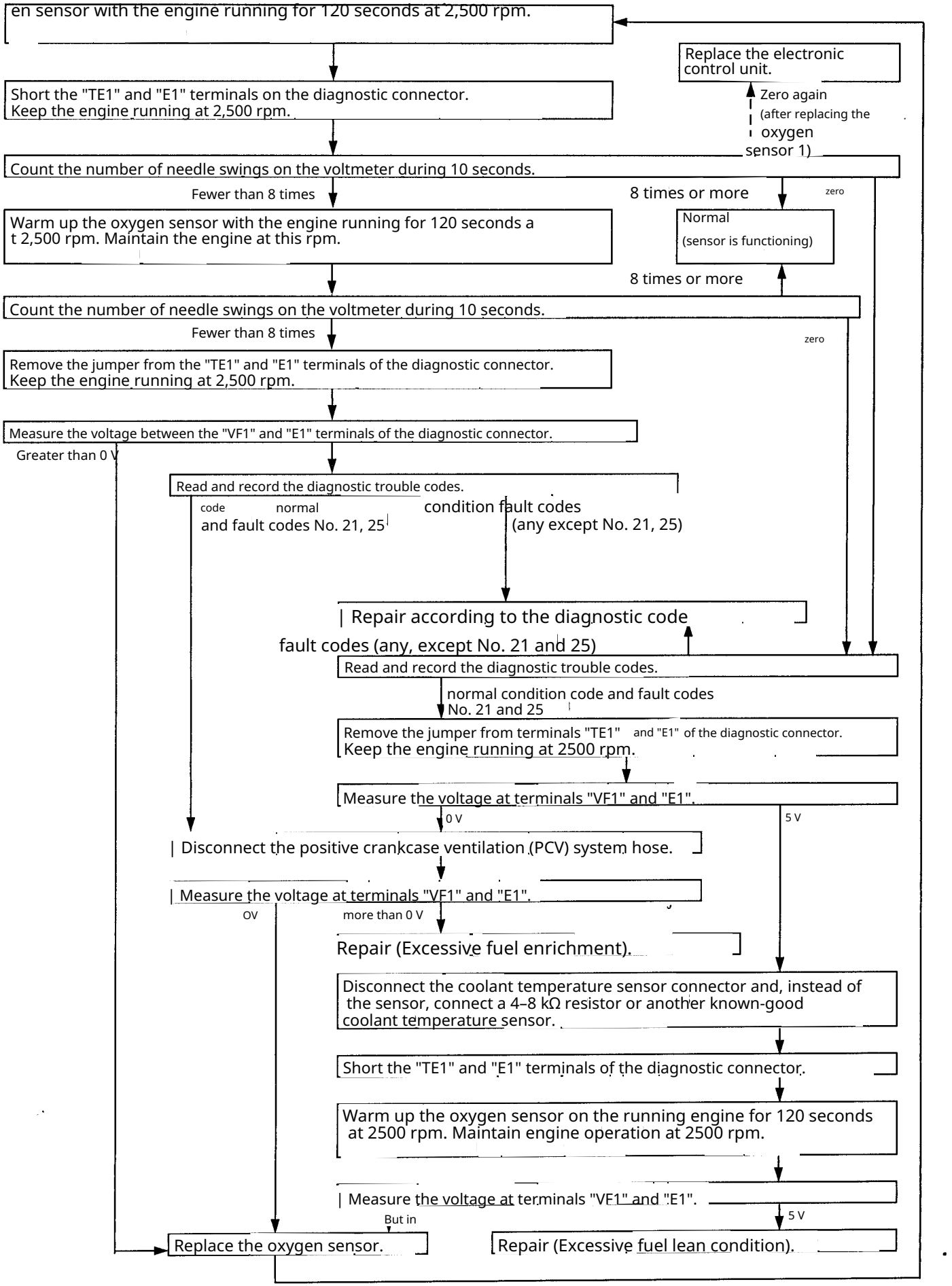

Ignition System

Precautions

1. Do not leave the ignition switched on for more than 10 minutes if the engine is not r unning.
2. When connecting a tachometer to the ig nition system, connect the tachometer's sig nal lead to the IG (-) terminal of the diagnos tic connector of the integrated electronic ig nition unit, and connect the power leads to the vehicle battery, as shown in the illustrat ion.

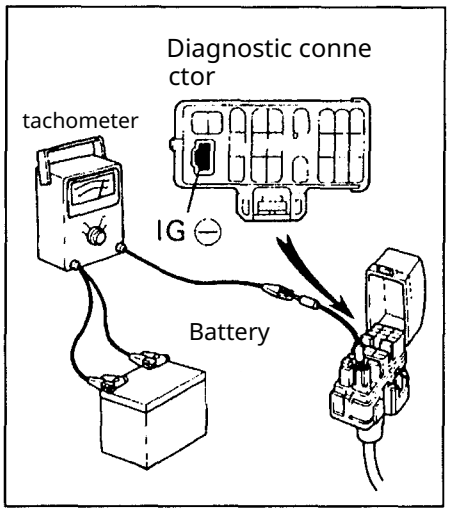

3. Because not all tachometers are compati ble with this ignition system, before using a tachometer, ensure its compatibility. 4. Nev er allow contact with the tachometer's output terminals.

with the "ground": this leads to failure of the ignition module and/or the ignition coil of the engine being tested.
5. Do not disconnect the battery while the engine is running.
6. Ensure that the ignition module is securely connected to the vehicle ground.

Inspection of components

ignition systems
Checking the ignition coil
Note: the terms "cold" and "hot" condition refer to the temperature of the windings: "cold" ..... from -10°C to +50°C "hot" ..... fro m +50°C to +100°C. These definitions are her eafter retained as well with respect to the indu ctive coils of angular pulse sensors.

1. Check the resistance of the primary win ding using an ohmmeter by connecting it to the ignition coil as shown in the illustrat ions (for the 4A-CE between terminals " A" (+) and "B" (-)). 4A-FE, 7A-FE

in the "cold" condition ..... 1.11 - 1.75 Ω
in a "hot" condition ..... 1.41 - 2.05 Ω

4A-GE

in the "cold" condition ..... 0.36 - 0.55 Ω
in the "hot" state. ..... 0.45–0.65 ohm

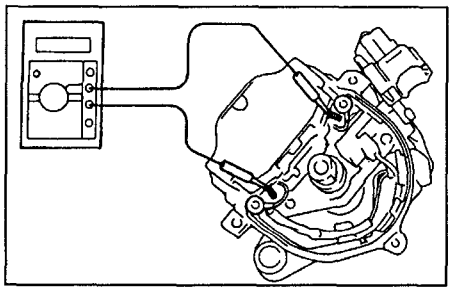

4A-FE, 7A-FE.

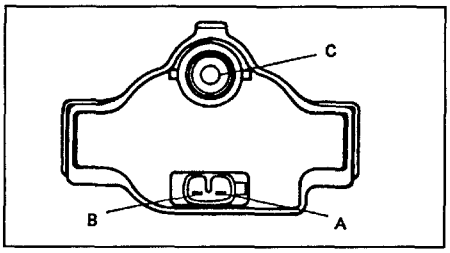

4A-GE.

2. Check the resistance of the secondary winding using an ohmmeter by connectin g it to the ignition coil as shown in the illu strations (for 4A-GE - between terminals " A" (+) and "C" (ground)).

in the "cold" condition ..... 9.0–15.7 kΩ
in a "hot" condition ..... 11.4–18.4 kΩ

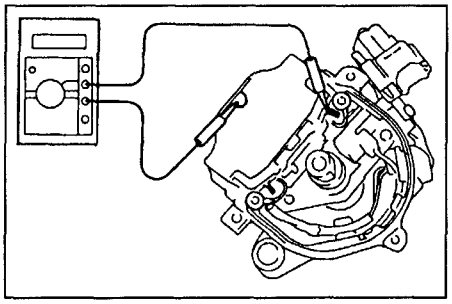

4A-FE, 7A-FE.

If the resistance of any of the coil windings of the ignition coil does not matches the nominal values, replace the ignition coil. NE senso r (4A-GE).

3. Using a megohmmeter, measure the re sistance between the negative terminal of the ignition coil and ground (for 4A-GE - b etween terminal "B" (-) and the ground wi re terminal). Rated resistance

.....not less than 10 MΩ

If not, replace the coil ignition.

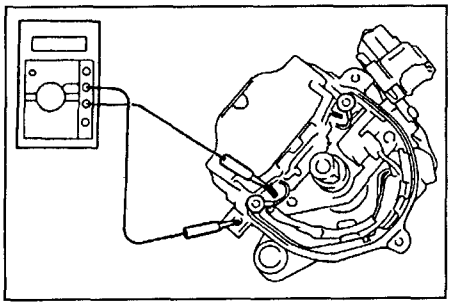

4A-FE, 7A-FE.

Distributor inspection Disconnect the distributor connector, remove the distribut or cap and the distributor rotor for the spa rk discharges.

1. Using a feeler gauge, check the air gap b etween the teeth of the rotor of the angular pulse sensors and the projection of the cor e of the inductive coil of that sensor.

Note: the system ignition may use multiple angular pulse sensors (t he NE sensor for crankshaft angle positio n and the G, G1, G2 sensors for camshaft angle position), so similar measurements should be performed for each sensor.

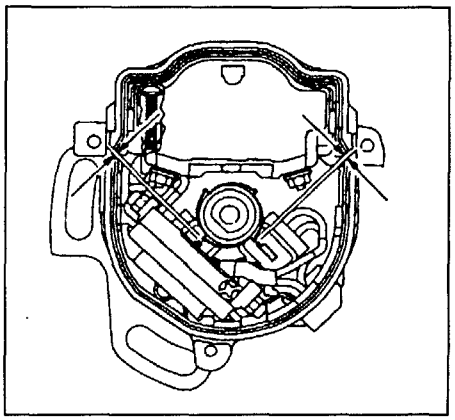

NE sensor (4A-FE, 7A-FE).

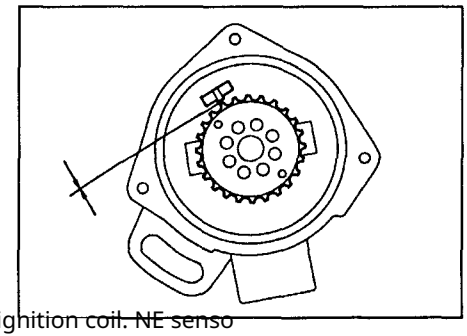

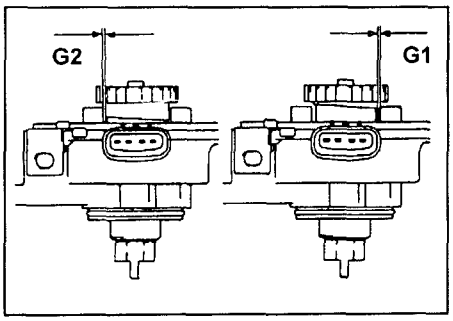

Sensor 6 (4A-GE).

Rated air gap ..... 0.2 - 0.5 mm

If the gap is outside the specified limits, replace the distributor housing, the distributor assembly, or the combined ignition block housing (ignition system contactless unit housing).

2. Check the electrical resistance of the inducti ve coils of the crankshaft and camshaft angle p ulse sensors with an ohmmeter. The ohmmete r connection diagrams are shown in the figure s, and the terminal numbers to which the ohm meter should be connected and the nominal r esistance values of the inductive coils of the an gle pulse sensors are given in the table "Electri cal resistance values of the inductive coils of a ngle pulse sensors".

4A-FE

In the "cold" state:

G(+) - G(-)... ..... 185–275 ohm
NE(+) and NE(-) ..... 370–550 ohm

In the "hot" state:

G(+) - G(-)..... 240 - 325 Ω
NE(+) and NE(-) ..... 475 - 650 Ω

7A-FE

In the "cold" state:

G(+) and G(-). ..... 185 - 275 Ω

In the "hot" state:

G(+) and G(-).. ..... 240 - 325 Ω

4A-GE

In the "cold" state:

G1(+) - G1(-)..... 125-200 Ω
G2(+) - G2(-)..... 125-200 Ω
NE(+) and NE(-) ..... 155-250 Ω

In the "hot" state:

G1(+) - G1(-).. ..... 160-235 Ω
G2(+) - G2(-). ..... 160 - 235 Ω
NE(+) and NE(-) ..... 190-290 Ω

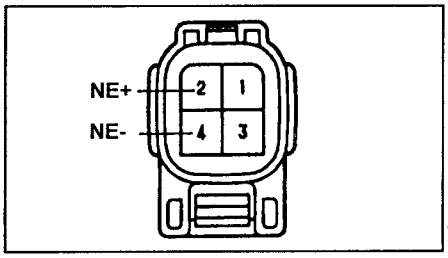

7A-FE.

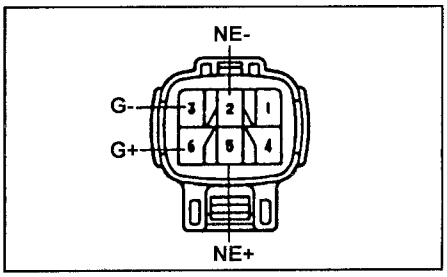

4A-FE.

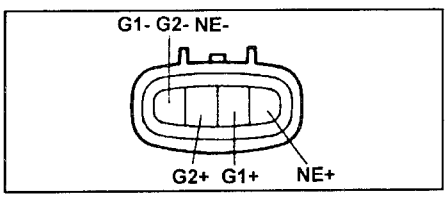

4A-GE.

If the resistance does not fall within the spec ified limits, replace the entire distributor ass embly (the housing of the combined ignition unit). 3. Reinstall the distributor rotor, t he distributor cap, and reconnect the distrib utor connector.

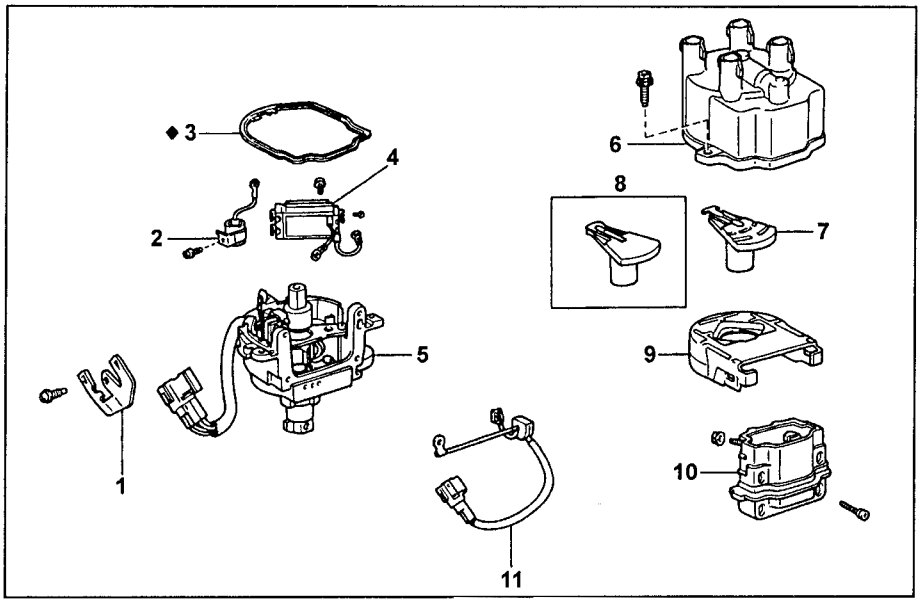

Combined ignition assembly. 1 wire-harness mounting clip, 2 condenser, 3 gasket of the combined ignition assembly cover, 4 igniter (KOMmutator), 5 housing of the combined ignition assembly, 6 cover of the combined ignition assembly, 7 distribut or rotor, 8 ignition distributor rotor (made of ceramic), 9 dust shield of the ignition coil, 10 ignition coil, 11 wire of the combined ignition assembly.

of the ignition assembly.

Combined assembly

ignition

The combined ignition assembly was i nstalled on 4A-FE and 7A-FE engines.

Removal

1. Remove the cable from the negative t erminal of the battery. 2. Disconne ct the high-voltage wires from the cap.

a) Use a screwdriver to pull back the sp ring latch, lift the retaining clip upward , and disconnect the holder from the ca p.

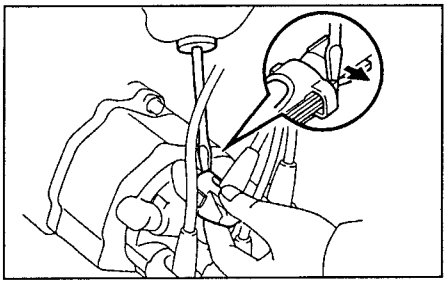

b) Disconnect the high-tension leads fr om the rubber grommets. Note: Under no circumstances pull on the wires, a s this may cause internal breaks in the wires . 3. Disconnect the connectors from the co mbined ignition unit.

4. Remove the ignition unit.

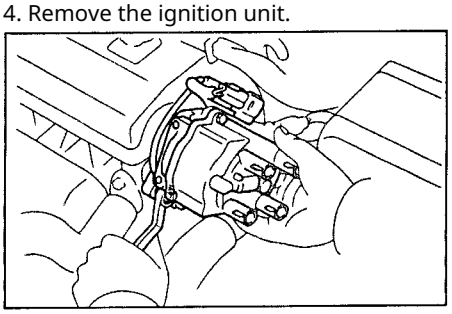

Disassembly

1. Remove the cap with the gasket by unscr ewing 3 bolts.
2. Remove the distributor rotor.

gania.

3. Remove the ignition coil dust shield t ogether with the gasket. 4. Rem ove the ignition coil.

a) Disconnect the three or four wires (de pending on the version) from the ignitio n coil terminals by loosening 2 nuts.

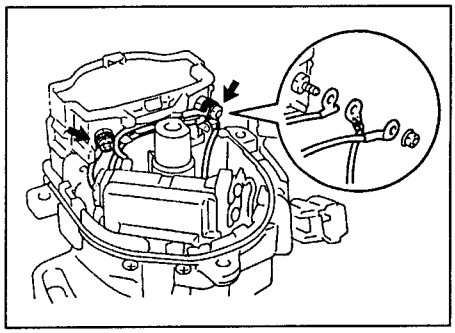

b) Unscrew the four screws and remove t he ignition coil.

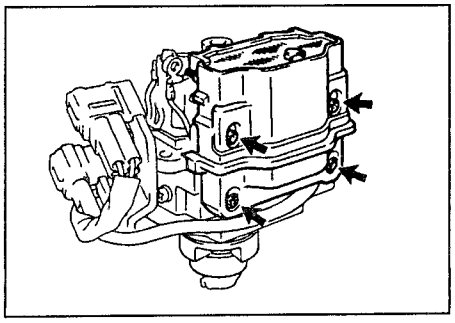

5. Remove the ignition switch (commutator) af ter first unscrewing 3 screws and disconnecti ng 3 wires from the switch terminals; then, aft er unscrewing 2 mounting screws, remove th e switch.

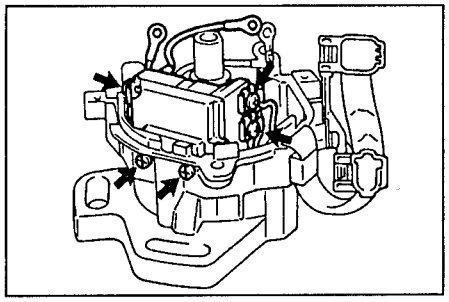

6. Remove the wire holder and the wiring harness of the combined unit ignition.

a) Disconnect the two connectors from th e wire holder.
b) Unscrew the screw and remove the wire holder.

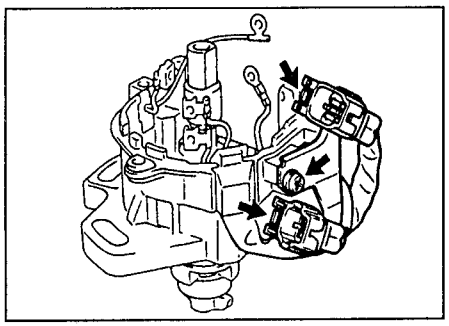

c) Disconnect the distributor wire from th e distributor housing.

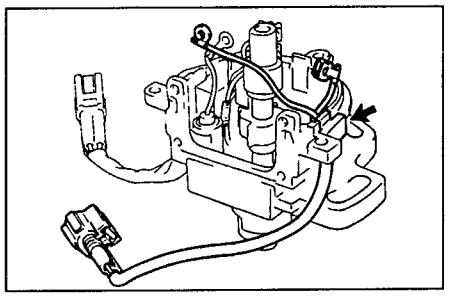

7. Disconnect the capacitor by loosening the mounting bolt.

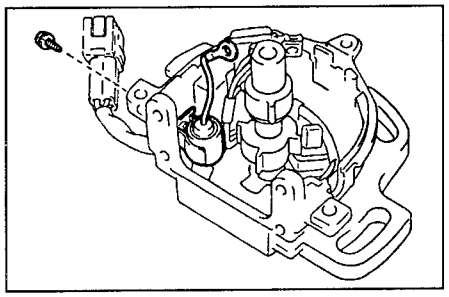

Distributor inspection Rotate the dist ributor shaft by hand and ensure the shaf t turns smoothly without play or binding.

If you feel wear or binding, replace the distri butor housing.

Assembly
1. Install the capacitor.
2. Install the distributor wire and the wire holder.
3. Install the ignition module by fastening it w ith two screws and connecting the three wire s to the module terminals.

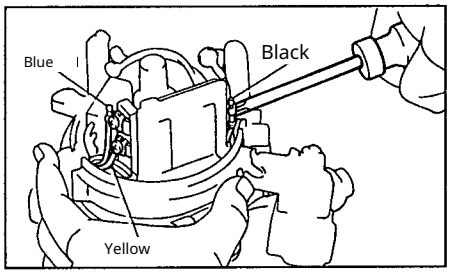

4. Install the ignition coil in the specifi ed sequence.

a) Remove the old sealant. b) Ap ply fresh sealant to the mating surface of the ignition coil housing that mates with t he surface of the ignition unit housing, as shown in the illustration.

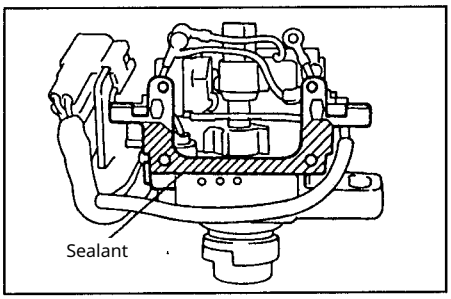

c) Install and secure the ignition coil with fo ur screws.

5. Connect the wires to the ignition coil termi nals, fastening them with two nuts, as show n in the illustration.

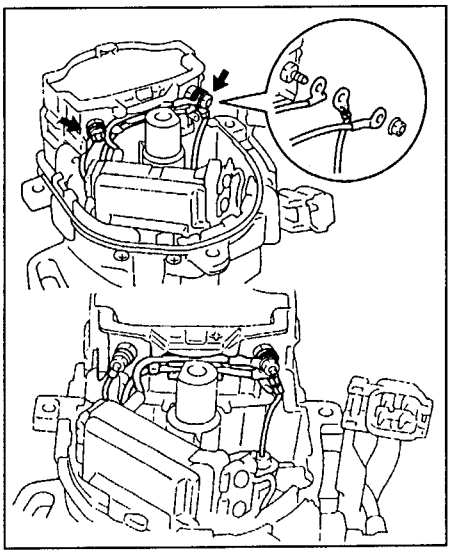

Note:
- When connecting the wires to th e ignition coil, lay the wires into the grooves provided on the side surfa ce of the coil. Distributor Distributor on the 4A-GE engine. Re ignition. was installed
- Ensure that the wires do not touch th e rotor of the angle pulse sensor or th e housing of the integrated ignition un it.

6. Install the ignition coil dust cover, fir st fitting a new gasket under the cover of the combined ignition unit.

7. Install the distributor rotor.

8. Install the cover, securing it with three b olts.

Installation
1. Set the piston of the first cylinder to TDC (see the "Timing Belt" section in th e chapter for the corresponding engine).
2. Install the combined ignition assembly Ignition.

a) Apply a layer of engine oil to the new O-ring seal.

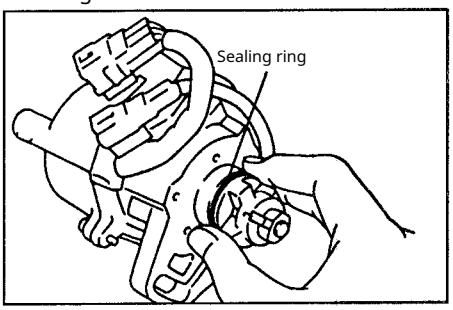

b) Align the projection on the ignition assembly housing with the groove on the connecting sleeve.

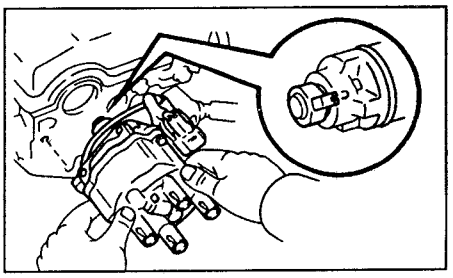

c) Insert the ignition assembly, centering i ts mounting flange with the mating hole i n the cylinder head and aligning the hole s in the ignition assembly flange with the bolt holes in the cylinder head.

d) Slightly tighten the two clamping bolts t hat secure the ignition assembly. 3. C onnect the high-tension leads to the distribu tor cap according to the engine firing order: 1-3-4-2.

4. Connect the connectors of the integrated ig nition unit.
5. Adjust the ignition timing advance (see the section "Ignition Timing Adjustment" in the chapter "Maintenance and General Inspection and Adjustment Procedures").

6. After adjusting the ignition timing advanc e, finally secure the housing of the integrate d ignition unit to the cylinder head by tighte ning the mounting bolts. Tightening torque: 20 N·m

.....

Removal

1. Disconnect the cable from the negativ e terminal of the battery. 2. Disconnect the high-voltage wires from the distribut or cap. 3. Disconnect the distributor co nnector. 4. Unscrew the two retaining bo lts, remove (pull out) the distributor, then separate the ring gasket-seal from the d istributor housing.

Disassembly
1. Remove the distributor cap and gasket b y unscrewing three bolts.

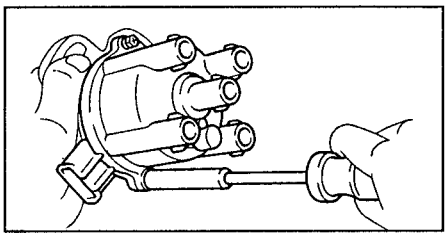

2. Remove the distributor rotor.
gania.

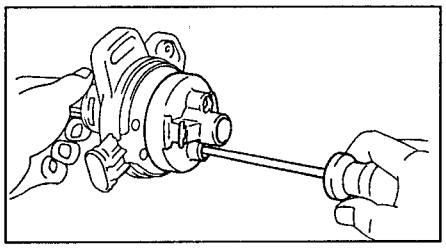

Inspection
Turn the distributor drive shaft, making s ure there is neither binding nor noticeabl e play. If either is present, replace the as sembled distributor housing.

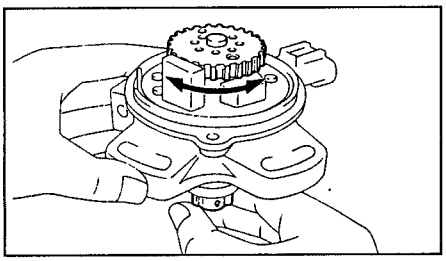

Assembly
1. Install the distributor rotor, first aligning the rec ess on the pulse angle sensor rotor with the projec tion on the ignition distributor rotor.

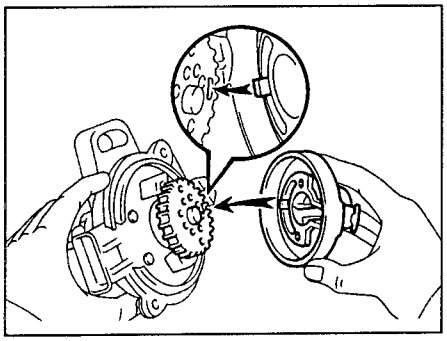

Then secure the distributor rotor with two scr ews.
2. Install the distributor cap on the distributor housing, using a new sealing ring.

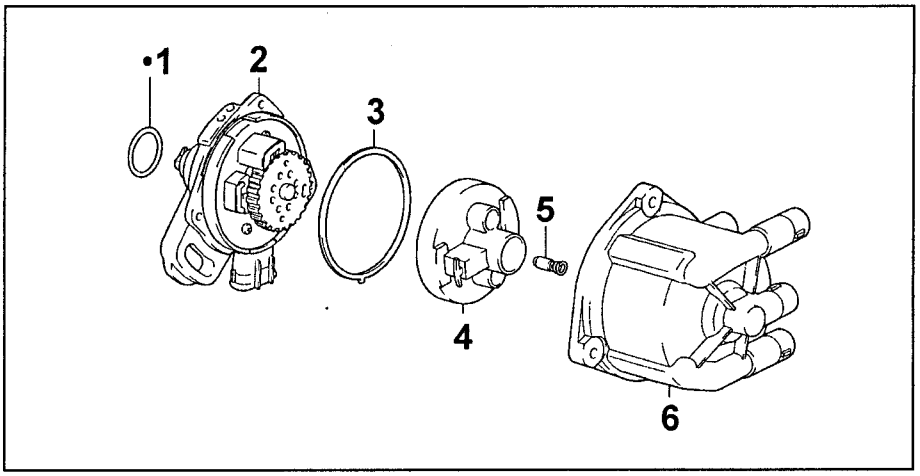

Ignition system distributor. 1 - ring seal, 2 - assembled distributor housing unit, 3 - ring gasket-seal of the distributor cap, 4 - distributor rotor, 5 - spring, 6 - distributor cap.

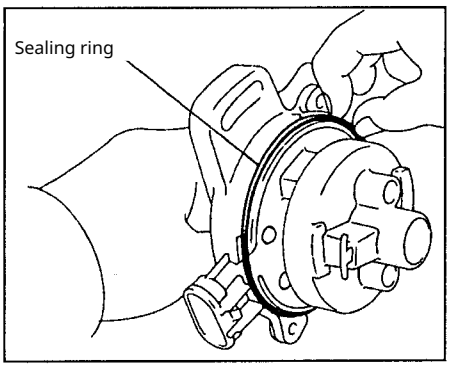

Then fasten the distributor cap with two bolts.

Installation
1. Position the piston of the first cylinder at TDC of the compression stroke (see the "Timing Belt" section of the chapter for the respective engine).
2. Install the distributor.
a) Install a new O-ring under the distributor housing and apply a thin layer of fresh engi ne oil to it.

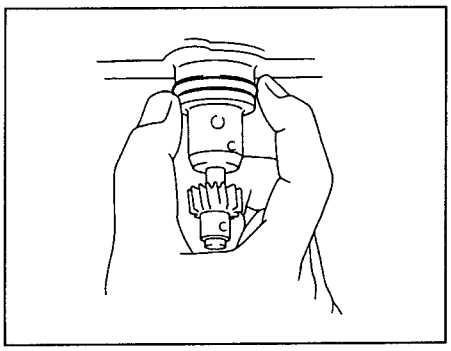

b) Align the slot on the coupling with the protrusion on the distributor housing.

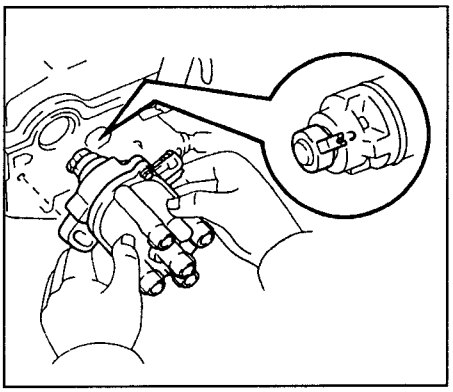

c) Insert the distributor, centering its locati ng flange with the seating hole in the cylind er head and aligning the flange holes of th e distributor with the bolt holes in the cylin der head.

d) Lightly tighten the two clamping bolts.
e) Secure the high-voltage wire holder (clip) with a bolt.
3. Connect the high-voltage wires to the spark plugs according to the engine firing order: 1-3 -4-2.

4. Connect the distributor connector—
manufacturer.
5. Connect the wire to the negative termi nal of the battery. 6. Adjust the ignition t iming (see the subsection "Ignition Timin
ignition g Adjustment" in the chap ter "Maintenance and General Inspection and Adjustment Procedures").

8. After adjusting the ignition timing
ignition fully tighten
clamping bolts of the distribution housing-
litelja.
Tightening torque.. ..... 20 N·m

Starting System

Starter

On Carib vehicles (models produced fr om 1995), the following types of starte rs were installed: 0.8 kW (with planetar y gear) (4A-FE, 7A-FE), 1.0 kW (with con ventional gear) (4A-FE and 7A-FE 1995 –97, 4A-GE from 1996), and 1.0 kW (wit h planetary gear) (4A-FE, 7A-FE from 1 997 onward).

Disassembly and reassembly of the s tarter (with standard reduction g ear) Note: use a high-temperature consi stent (lubricant)

lubricant for greasing the bearings and gears when assembling the starter.

1. Remove the dust cover.

2. Remove the starter housing assembled with the s tarter winding and the armature from the body of th e starter solenoid.

a) Unscrew the nut and disconnect the wir e lead from the terminal of the starter sol enoid. Tightening tor ..... que: 6 N·m b) Unscrew the 2 clamping bolts. Pul l the starter housing assembled with the st ator winding and the armature out of the s tarter solenoid housing and remove the O- ring seal.

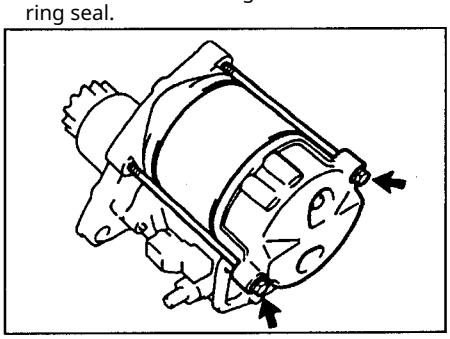

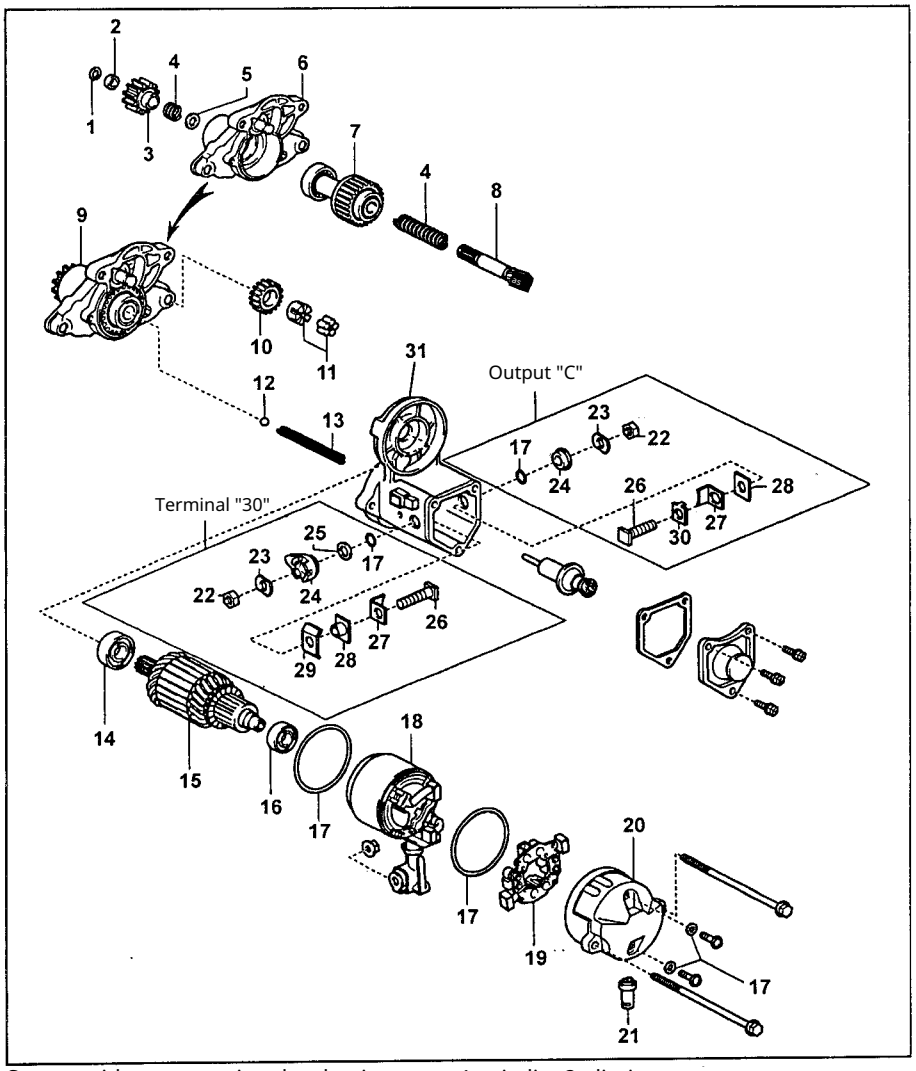

Starter with a conventional reduction gear. 1 - circlip, 2 - limiter- 3 - drive gear, 4 - spring, 5 - spring retainer, bushing, clutch shaft, 6 - cover on the drive side, 7 - overrunning clutch, 8 - cover assembled with overrunning clutch, 10 - intermediate gear, 9 - bearing, 12 - steel ball, 13 - return spring, 14 - front bearing, 15 - armature, 16 - rear bearing, 17 - O-ring, 18 - housing assembly with stator winding, 19 - brush holder, 20 - cover on the commutator side, 21 - dust boot, 22 - terminal nut, 23 - wave washer, 24 - external terminal insulator, 25 - seal, 26 - terminal bolt, 27 - contact plate, 28 - internal terminal insulator, 29 - insulating gasket, 30 - terminal, 31 - traction relay housing.

Note: during assembly align the projection on the housing with the notch on the start er solenoid housing.

3. Disconnect the starter cap on the d rive side.

a) Unscrew the 2 screws.

Tightening torque..... ..... 6 N·m

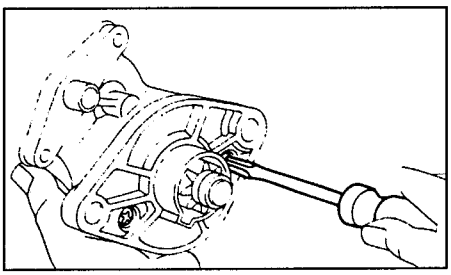

b) Detach from the starter solenoid ho using the drive-side cover assembled with the overrunning clutch (1), the ret urn spring (2), the intermediate gear (3), and the bearing (4).

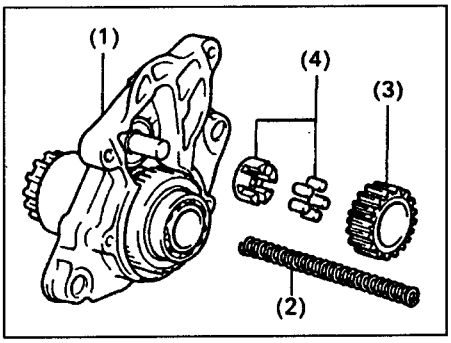

4. Using a magnetic rod remove the steel ball from the hole in the overrunning clutc h shaft as shown in the illustration.

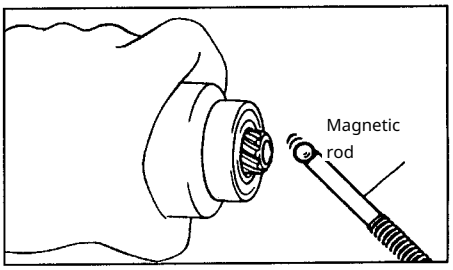

5. Remove the brush holder and brushes.

a) Unscrew the two screws and remove the starter cover from the housing side. Remove the O-rings.

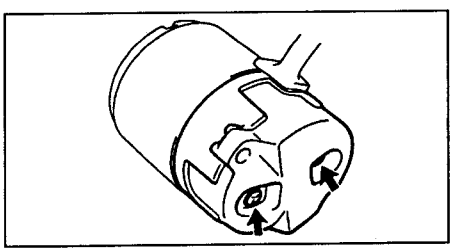

b) Using a screwdriver, pry back the brus h spring and disconnect the brush from the brush holder. Disconnect the four br ushes and remove the brush holder. Ma ke sure the positive (+) wire is not shorte d to ground.

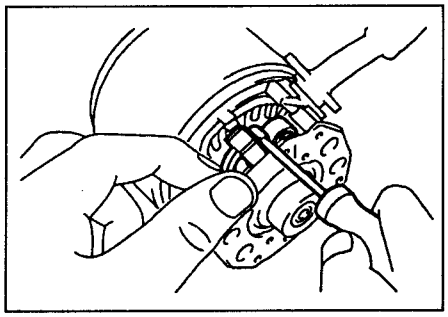

6. Remove the armature from the start er housing. Note: the starter is assembl ed in the reverse order of disassemb ly. Starter disassembly and assembly (with planetary reduction gear) Disas sembly

1. Remove the pull-in (solenoid) relay.

a) Unscrew the nut and disconnect the wi ring harness from the pull-in relay t erminal. b) Loosen the two nuts securing the pull-in relay to the starter cover on th e gear side and remove the relay.

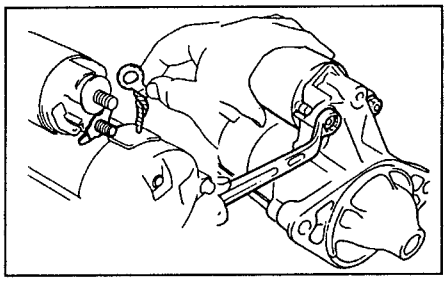

2. Unscrew the two tie bolts and pull out the h ousing assembled with the stator winding toge ther with the armature.

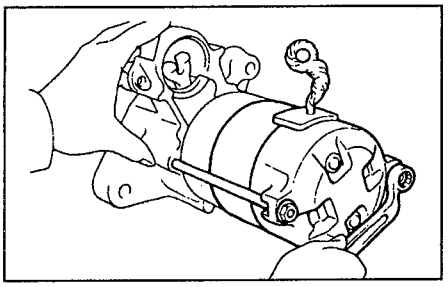

3. Unscrew the two screws with sealing rings and remove the commutator-side cover, holdi ng the wiring harness in place.

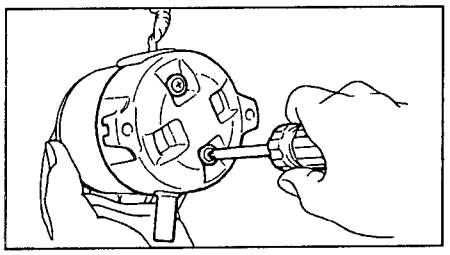

4. Remove the brush holder. a) Usin g a screwdriver, press out the spring and disc onnect the brush holder.

b) Disconnect the four brushes and remove t he brush holder.

5. Disconnect the armature from the starter hous ing.

6. Remove the 2 O-ring seals from the starter housing.

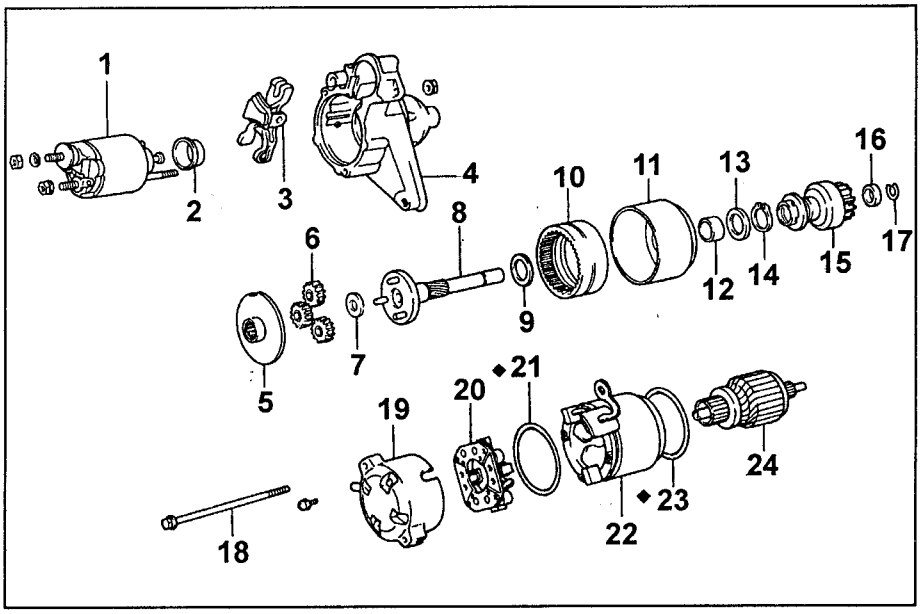

Starter with a planetary-type reducer. 1 - pull-in relay, 2 - cover core cover, 3 - drive lever, 4 - drive-sid e cover, 5 - plate, 6 - planet gears (satellites), 7 - washer, 8 - carrier, 9 - washer, 10 - ring gear (epicyclic), 11 - damper, 12 - bearing, 13 - washer, 14 - circlip, 15 - overrunning clutch, 16 - li miting sleeve, 17 - circlip, 18 - tie bolt, 19 - commutator-side cover, 20 - brush holder, 21 - se aling ring, 22 - housing, 23 - sealing ring, 24 - armature.

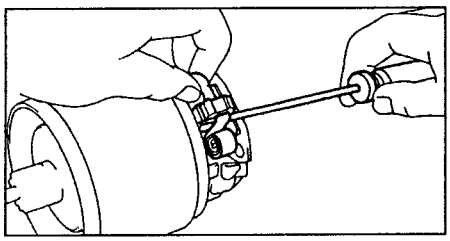

7. Disconnect the drive lever and the overrun ning clutch with the drive gear together with t he damper from the cover on the drive gear s ide.

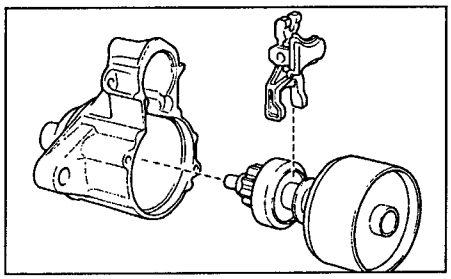

8. Remove the satellites. Di sconnect the washer (1) from the damper, the three satellites (2), and the plate (3).

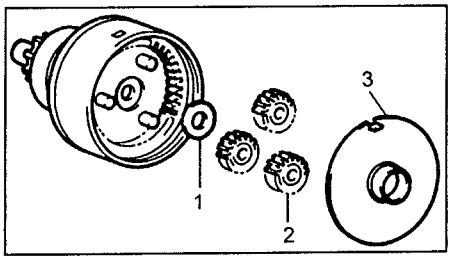

9. Remove the overrunning clutch from the gear- of the drive.

a) Using a screwdriver, slide the retainer sle eve toward the overrunning clutch of the d rive.

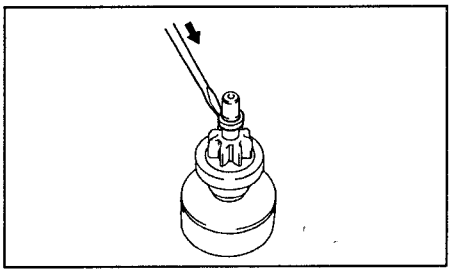

b) Use a screwdriver to remove the circlip.

c) Remove the limiter sleeve and the o verrunning clutch.

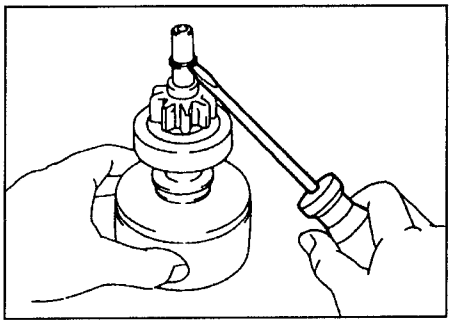

10. Remove the carrier and the epicyclic gear.

a) Using pliers, remove the retaining ri ng and the washer.

b) Remove the carrier and the washer.

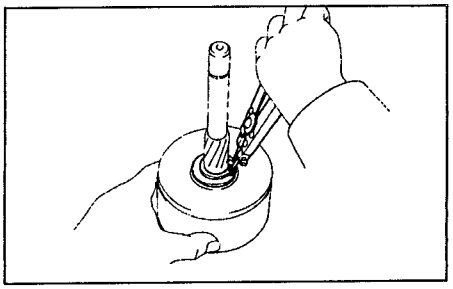

Assembly

Note: use a temperature-resistant high-consistency lubricant for the bearings and gears when assembling the starter.

1. Install the planet gear and carrier.

a) Apply grease to the planet gear at the contact areas with the damper and the satellites.

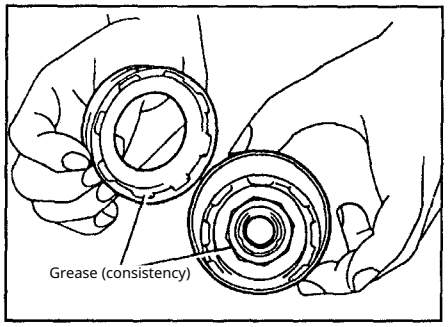

b) Align the epicycle slot with the internal tab of the damper. c) Insert and rotate the epicycle to lock the damper in place.

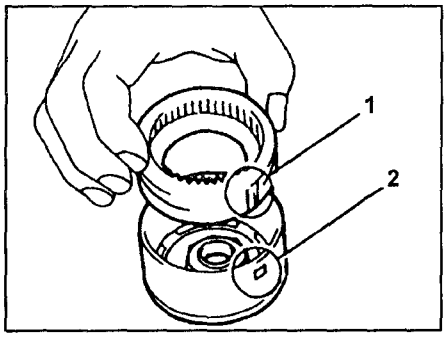

c) Apply a high-quality consistency grease with additives to the bearing.

d) Apply grease to the washer and install it onto the carrier.

e) Install the carrier into the damper.

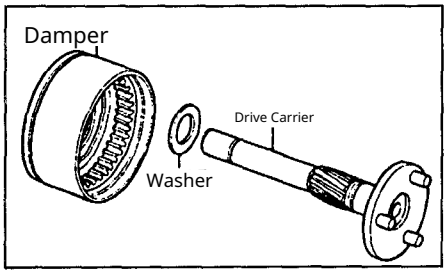

g) Using pliers, install the washer and circlip.

2. Install the pull-in relay.

a) Apply grease to the bushing and into the groove of the overrunning clutch's limiting sleeve.

b) Install the one-way clutch and the retaining sleeve onto the carrier.

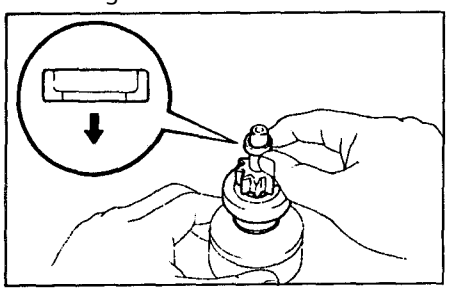

c) Apply grease to the retaining ring and install it into the carrier groove. d) Using a vise, crimp the retaining ring.

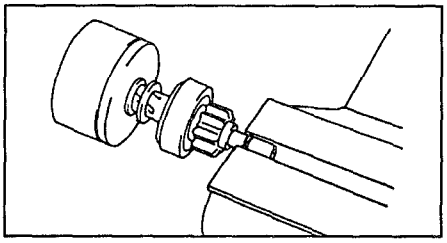

d) While holding the overrunning clutch, press the carrier in place and install the limiting sleeve onto the snap ring using a hammer with a plastic mallet.

3. Install the planet gears.

a) Apply grease to the planet gears and to the carrier flange with the guides. b) Install the washer and three planet gears. c) Install the plate, aligning its groove with the protrusion inside the damper.

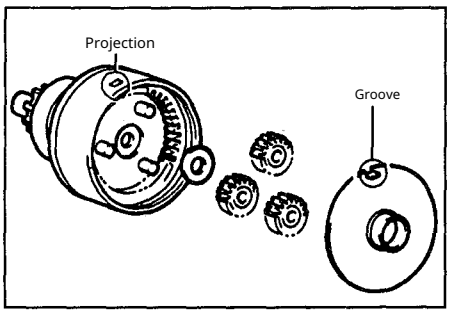

4. Install the drive lever and the overrunning clutch together with the damper. a) Apply a high-quality lithium-based (or appropriate) grease with additives to the bearing in the cover on the drive side.

b) Apply grease to the drive lever at the pivot point.

c) Install the drive lever onto the overrunning clutch.

d) Align the damper protrusion with the groove in the cover on the drive side.

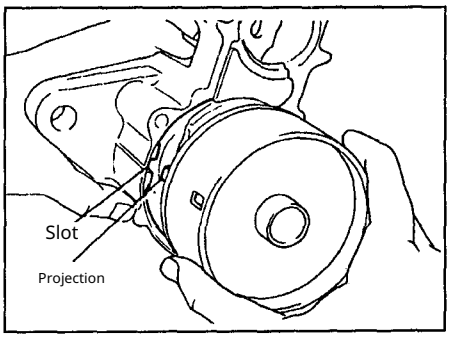

5. Install new O-ring seals on the starter housing.

6. Install the armature into the starter housing.

7. Install the brush holder.

a) Position the brush holder on the armature in the correct position. b) Using a screwdriver, pry back the brush spring and connect the brush to the brush holder. Install 4 brushes in this manner. Note: check that the brush (+) wires do not contact the chassis ground.

8. Install the commutator. a) Apply turbine oil with additives to the bearing in the cover on the commutator side.

b) Install the cover using 2 new screws with sealing washers.

9. Install the starter housing and armature assembly.

a) Align the slot in the starter housing with the damper's tab.

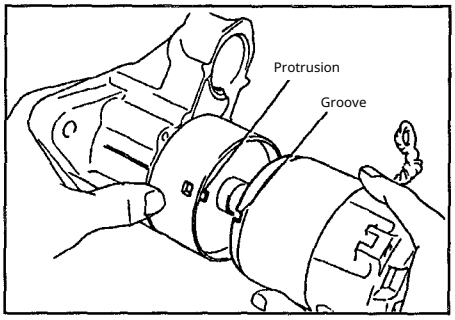

b) Install the starter housing with the armature assembly and secure it with two bolts.

10. Install the pull-in (traction) relay.

a) Install the cover on the pull-in relay.

b) Install the pull-in relay and secure it with two nuts.

c) Connect the wiring to the starter terminal C and tighten the nut.

Replacement of the pull-in relay terminals

1. Unscrew the three bolts and remove the wiring clamp, the rear cover, the gasket, and the plunger.

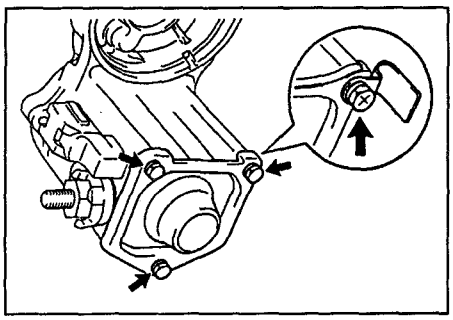

2. Inspect the amount of wear on the contact plate. Measure the wear of the plate using calipers.

plate.

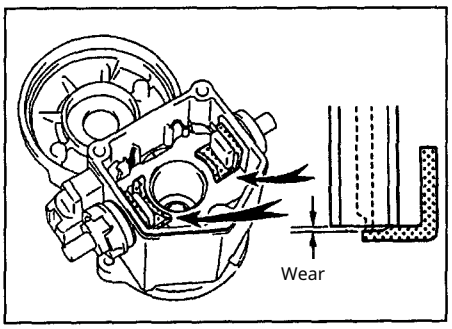

Maximum allowable wear ..... 0.9 mm

If the wear exceeds the maximum allowable limit, replace the plate. 3. Disassembly of the terminals.

a) Loosen the terminal nuts.

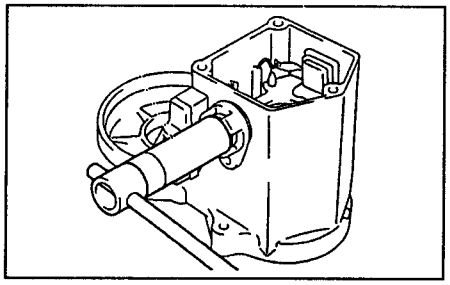

b) Disassembly of termin
al "C": Remove the nut, wave washer, o
uter terminal insulator, O-ring, bolt, co
ntact plate, inner terminal insulator an
d insulating spacer.

c) Disassembly of terminal "
30": Remove the nut, wave washer, outer
terminal insulator, seal, O-ring, bolt, con
tact plate, inner terminal insulator and in
sulating spacer.

4. Assembly of the terminals.
(Output "30").
Install the following components as shown in the illustration:
(1) insulating gasket,
(2) internal terminal insulator,
(3) contact plate,
(4) bolt,
(5) O-ring, (6) seal and ex
ternal terminal insulator (align the i
nsulator's protrusion with the housi
ng groove), (7) wave
washer, (8) nut.

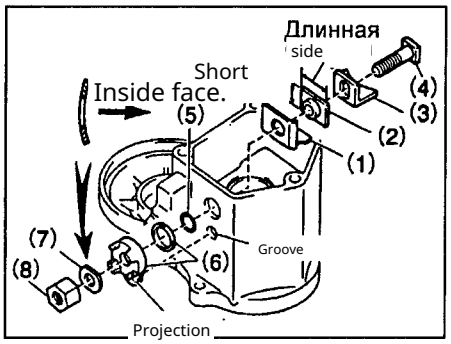

(Terminal "C").
Install the following components:
(1) inner terminal insulator,
(2) contact plate,
(3) bolt,
(4) sealing ring,
(5) outer terminal insulator,
(6) wave washer,
(7) nut.

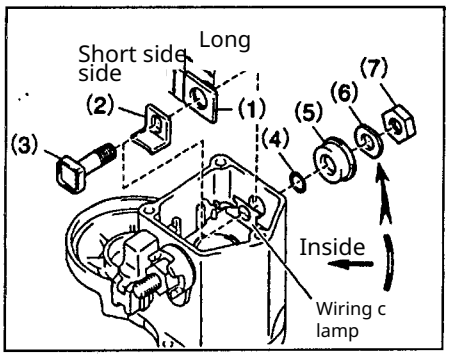

Temporarily tighten the terminal nuts.

5. Tighten the terminal nuts.
a) Install the wooden block
on the contact plate and press it in.

Block dimensions..... ..... 20×37×40 mm
Pressing force ..... 981 N

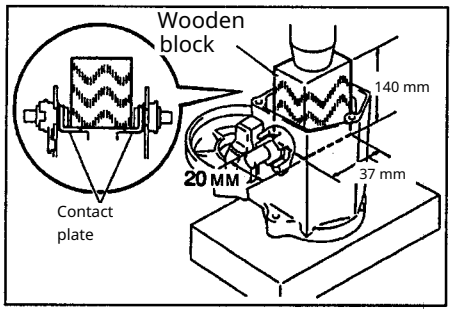

b) Tighten the nuts.
Tightening torque ..... 17 N·m

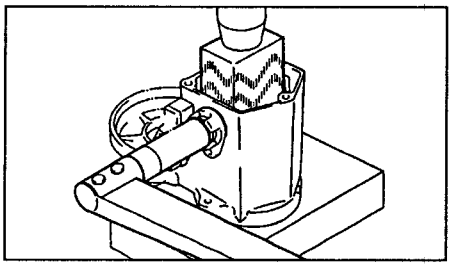

Note: exceeding the tightening to
rque may lead to the appearance
of cracks on the inner
surface of the insulator.

6. Clean the surfaces of the contact plat
e and the plunger.

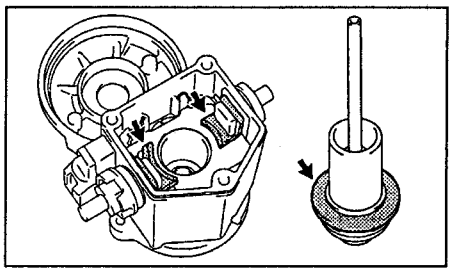

7. Install the plunger, the new gasket, the c
over, and the wiring clamp, securing them
with three bolts.

Starter inspection

Armature inspection

1. Using an ohmmeter, verify conductivity between the commutator segments. If not present, replace the armature.

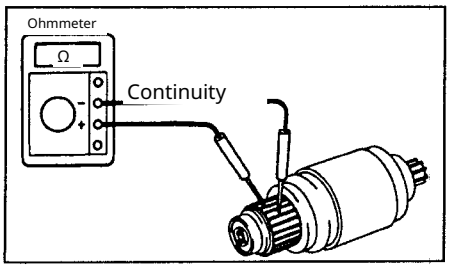

2. Check whether the armature winding is shorted to the ground.
Using an ohmmeter, ensure there is no c
onductivity between the commutator seg
ments and the armature core. If there is,
replace the armature.

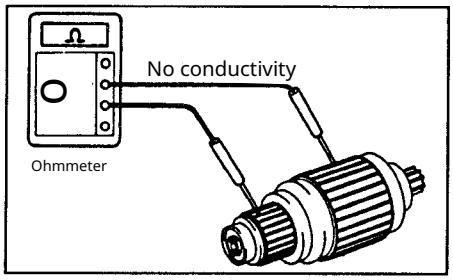

Commutator inspection
1. Inspect the working surfaces of the com
mutator segments; if they are dirty or burn
ed, clean the working surfaces with No. 40
0 sandpaper or turn the commutator on a l
athe.

2. Mount the armature on the prisms and mea
sure the commutator runout.
Maximum allowable radial commutator ru
nout 0.05 mm
.....

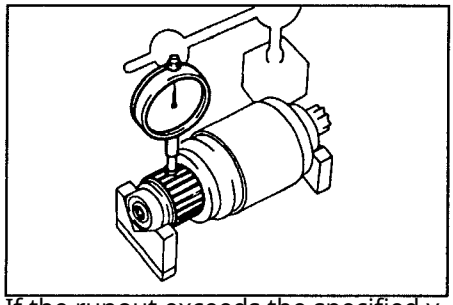

If the runout exceeds the specified v
alue, have the commutator turned o
n a lathe.

3. Using calipers, measure the diameter of the commutator.

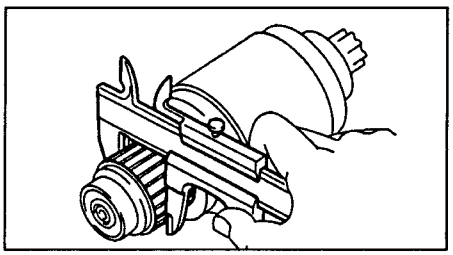

Rated commutator diameter:
starter 0.8 kW.. ..... 30 mm
starter 1.0 kW..... ..... 30 mm
Minimum allowable diameter
commutator diameter:
starter 0.8 kW... ..... 29 mm
starter 1.0 kW.. ..... 29 mm
If the commutator diameter is smaller than t
he minimum allowable, replace the starter ar
mature.

4. Check that there is no contamination or for
eign particles in the grooves between the co
mmutator segments. Rated amo
unt of commutator segment protrusion... Mi
nimum allowable segment ..... 0.6 mm
protrusion size
..... 0.2 mm

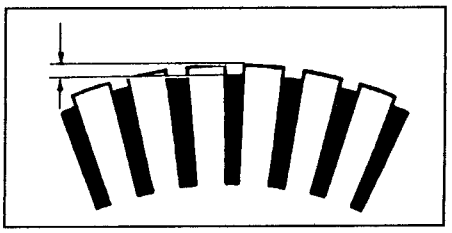

Stator inspection
1. Using an ohmmeter, ensure there is c ontinuity between the wire terminal and the brush wire as shown in the illustratio n. If not, replace the starter housing asse mbly with the stator winding.

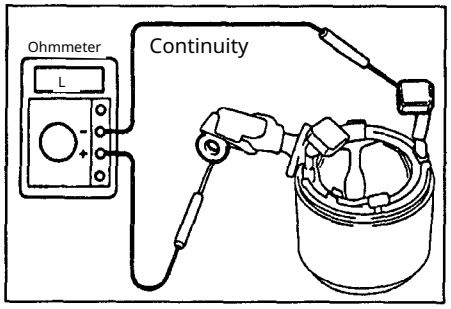

2. Ensure there is no conductivity between the stator winding and the housing. If there is, replace the starter housing assembly with the stator winding.

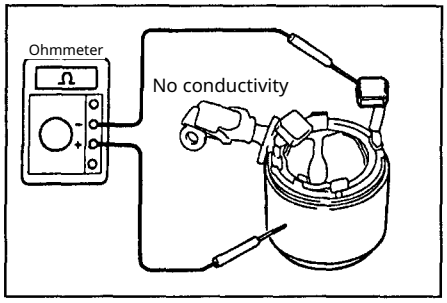

Brush Inspection
Measure using a caliper their brush height.
Rated brush height:
starter 0.8 kW. ..... 14.0 mm
starter 1.0 kW. ..... 13.5 mm
Minimum allowable height brushes:
starter 0.8 kW. ..... .9 mm
starter 1.0 kW. ..... .8.5 mm

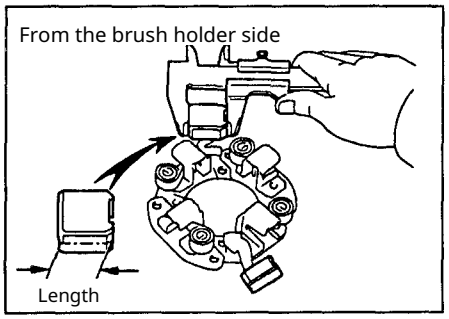

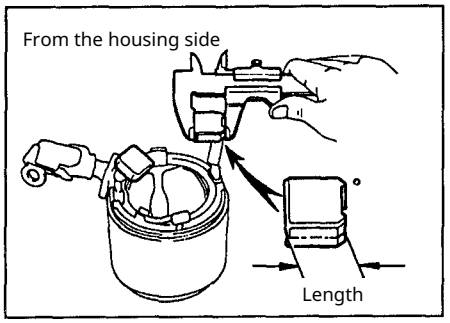

If the height of the brush less Mini-
If it is less than the minimum permissible v alue, replace the brushes and touch up wit h sandpaper.

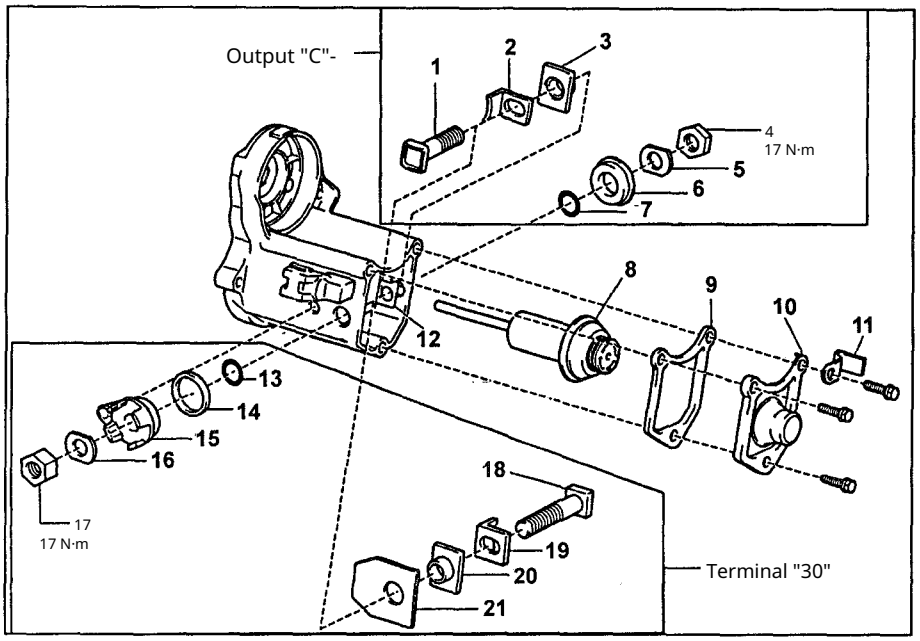

Disassembly and assembly parts of the traction relay: 1 - bolt, 2 - contact plate, 3 - terminal insulator, 4 - nut, 5 - wave washer, 6 - terminal insulator, 7 - O-ring, 8 - plunger, 9 - gasket, 10 - cover, 11 - wiring clamp, 12 - terminal, 13 - O-ring, 14 - seal, 15 - terminal insulator, 16 - wave washer, 17 - nut, 18 - bolt, 19 - contact plate, 20 - terminal insulator, 21 - insulating gasket.

Brush spring inspection
Using a dynamometer, measure the tension of the brush springs at the moment they lift from the brush.
Rated brush spring force:
starter 0.8 kW ..... 14–18 N
starter 1.0 kW ..... 19–23 N
Minimum brush spring force:
starter 0.8 kW ..... 9 N
starter 1.0 kW. ..... 12 N

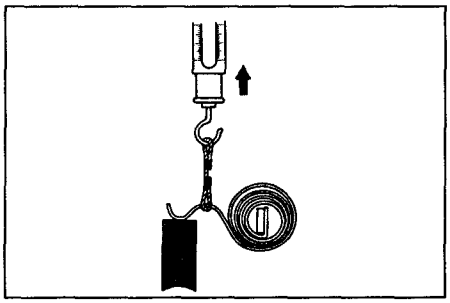

If the spring force is less than the minimum val ue, replace the brush springs.

Brush holder inspection Check t he insulation of the brush holder. Using an ohmmeter, make sure there is no cond uctivity between the positive "+" and the n egative "" brush holders. If not, replace th e brush holder. Ohmmeter

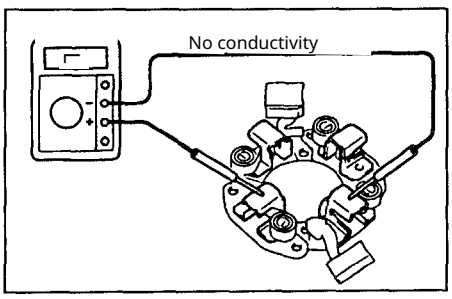

Inspection of the overrunning clutch and gears
1. Inspect the working surfaces of the tee th on the planet gears, the ring gear, and the overrunning clutch gear for excessiv e wear or chipping. If wear or damage is found, replace the gears.

If burrs or chips are present on the toot h surfaces of the overrunning clutch ge ar, inspect the working surfaces of the f lywheel ring gear teeth. 2. Check the overrunning clutch. Verify t hat the drive gear rotates freely clockwi se and does not rotate counterclockwis e.

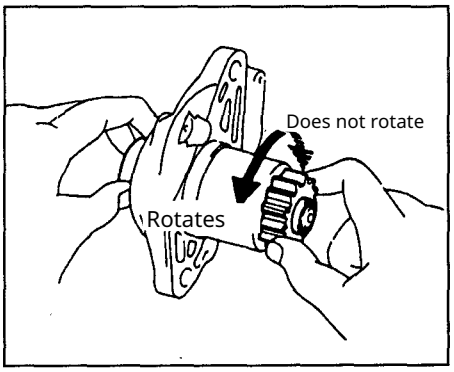

If the conditions are not met, replace the overrunning clutch.
3. Replace the overrunning clutch (if nec essary).
A. Disassembly of the starter cover from th e drive and overrunning clutch side.
a) Clamp the copper rod in a vise and pl ace on it the starter cover from the drive side with the overrunning clutch assem bled.
b) Press the drive gear.
c) Using a hammer with a plastic striking head, seat the retaining sleeve.

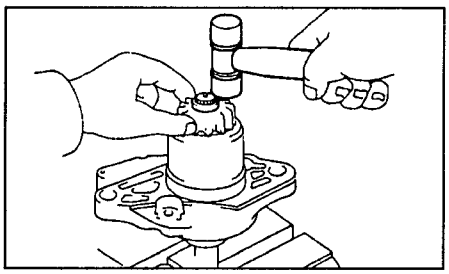

g) Pry off with a screwdriver
circlip.
d) Remove:
(1) the retaining sleeve,
(2) the drive gear,
(3) the spring.

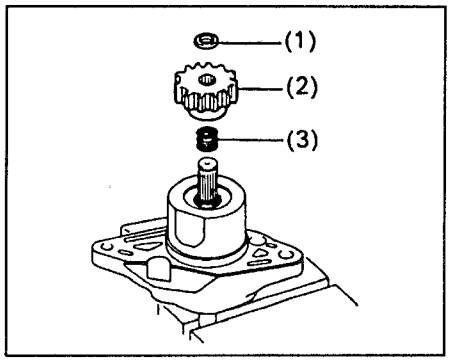

e) Press the starter cover on the drive side and remove the spring retainer.

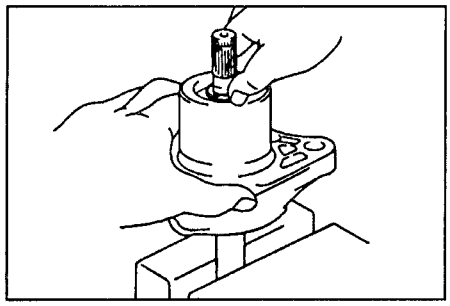

g) Disconnect:
(1) the starter cover on the drive side,
(2) overrunning clutch,
(3) spring,
(4) overrunning clutch shaft.

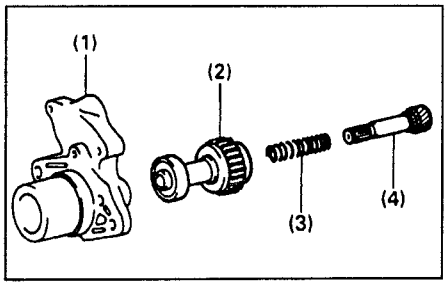

B. Assembly of the starter cover on the drive and overrunning clutch side.
a) Connect:
(1) the starter cover on the drive side,
(2) overrunning clutch,
(3) spring,
(4) overrunning clutch shaft.
b) Clamp the copper ster- install the starter cover on it from the drive side and the overrunning clutch assembly.

c) Press the starter cover on the drive side and install:
(1) the spring retainer,
(2) the spring,
(3) the drive gear,
(4) the retaining sleeve.

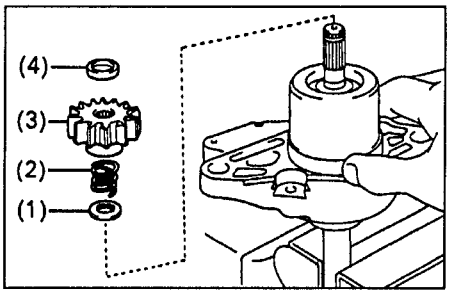

g) Press on the drive gear.
Install a new circlip
d)
ring.

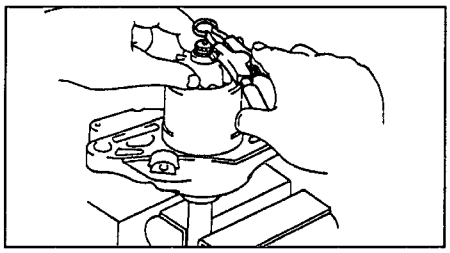

e) Using pliers, crimp the circlip.

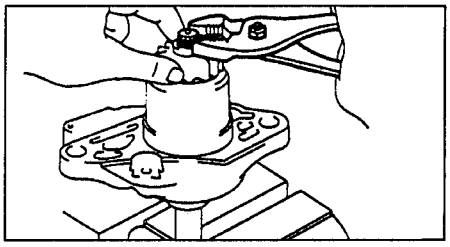

g) Remove the starter cover from the drive side with the overrunning clutch assembly including the copper rod.
3) Using a hammer with a plastic head, seat the overrunning clutch shaft in place and install the limiting sleeve onto the snap ring.

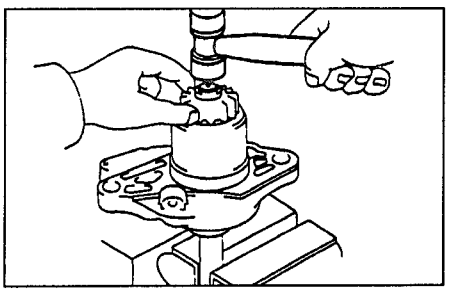

Bearing inspection
1. Check the front bearing. Rotate each bearing by hand while simultaneously applying an axial force directed toward the armature center.

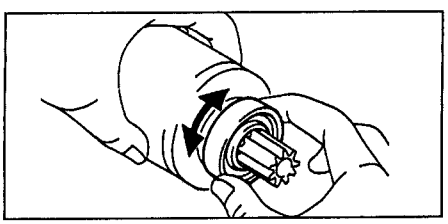

If excessive resistance is felt when rotating the bearing or if the bearing binds, replace the bearing.

2. Replacement of the front bearing (if necessary).
a) Remove the bearing using a puller.
b) Using a press and a driver, press in the new front bearing.

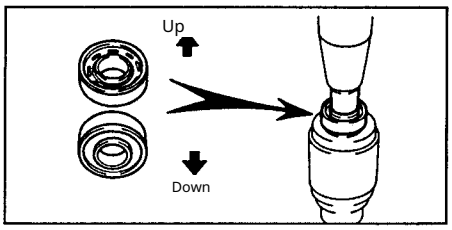

3. Check the rear bearing. Rotate each bearing by hand while simultaneously applying axial force toward the armature center. If excessive resistance is felt when rotating the bearing or the bearing seizes, replace the bearing.

4. Replace the rear bearing if necessary.
a) Remove the bearing using a puller.
f) Using a press, install the new rear bearing. Checking the starter solenoid

1. Check the pull-in winding of the starter solenoid.
Use an ohmmeter to confirm continuity between the starter terminals "50" and "C".

If not, replace the starter solenoid.

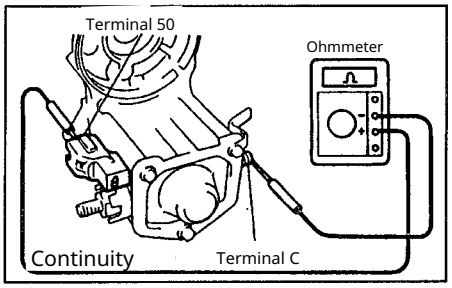

2. Check the hold-in winding. Using an ohmmeter, ensure there is no continuity between starter terminal "50" and the housing. If continuity is present, replace the starter solenoid.

Inspection of the carrier and bearings (starter with planetary gear reducer)

1. Check the carrier and bearings.
a) Using a micrometer, measure the outer diameter of the carrier's seating surface for the bearing. Nominal

diameter.. ..... 14.035 - 15.000 mm

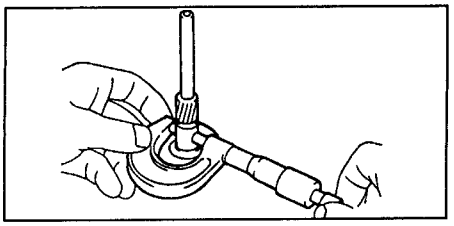

b) Measure the inner diameter of the bear ing.
Nominal inner diameter of the bearing: 15 .000–15.035 mm.....

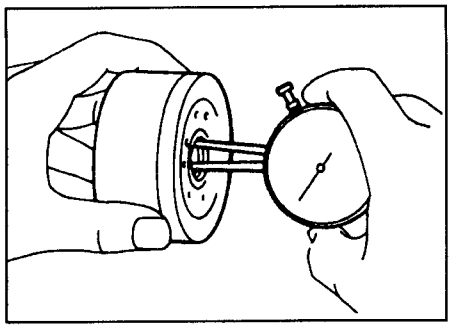

c) Calculate the clearance between the bea ring and the carrier by subtracting the carr ier shaft diameter from the bearing inner diameter. Clearance:

nominal 0.03 mm.....
maximum 0.1 mm .....
If the clearance exceeds the maximum value, replace the carrier and the bearing.

2. If necessary, replace the bearing.

a) Remove the bearing using a puller.

b) Using a press and a driver, press in the new bearing as shown in the il lustration.

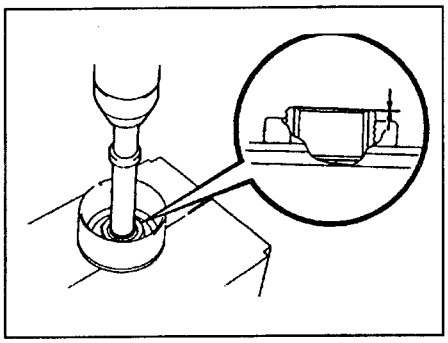

Inspection starter operation

Note: perform this test for 3–5 s to avoid d amaging the stator winding.

1. Check the pull-in winding of the starter solenoid.
a) Disconnect the winding lead from termin al "C" of the starter.
6) Connect the battery leads to the ter minals of the starter solenoid as show n in the illustration. Make sure the pini on of the overrunning clutch has exten ded outward.

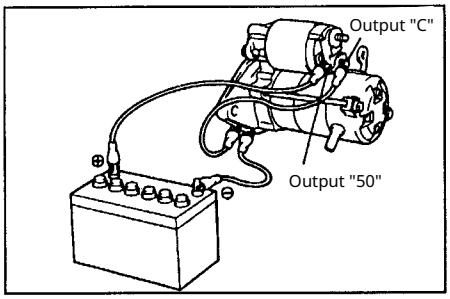

0.8 kW.

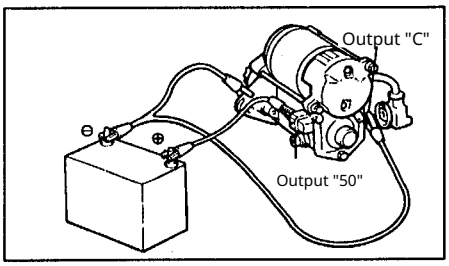

1.0 kW

. If the pinion of the overrunning starter clutch does not extend, replace the starter solenoid assembly.

2. Check the holding winding. With th e connections made as described in the previous item and with the pinion of th e overrunning clutch extended, disconn ect the (-) lead from terminal "C". Make sure the pinion remains extended. If the pinion retracts, replace the starter sole noid assembly. 3. Check whether the pi nion of the overrunning clutch ret racts. Disconnect the (-) lead from the b ody of the starter solenoid. Mak e sure the pinion of the overrunning clu tch retracts inward. If the pinion of the overrunning clutch does not retract, re place the starter solenoid assembly.

4. Check starter operation without load.

a) Connect the battery leads and the a mmeter leads to the starter as shown i n the illustration, and also connect the winding lead to the starter terminal "C" .

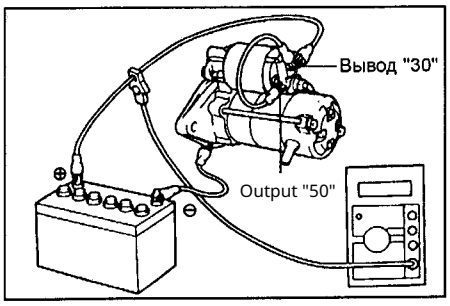

0.8 kW.

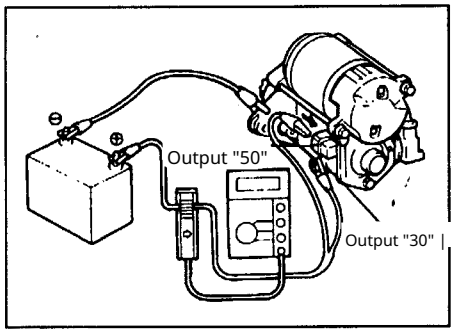

1.0 kW.

6) Check that the starter armature rotate s smoothly and that the drive gear of the overrunning clutch is extended. Me asure the current using an ammeter.

Rated current (at 11.5 V):
except for the 2.2 kW starter..... ..... 90 A
starter 2.2 kW (2C)... ..... 120 A

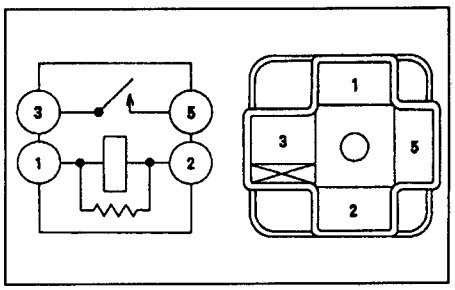

1. Relay inspection.
a) Using an ohmmeter, check for continuit y between terminals "1" and "2".

b) Using an ohmmeter, confirm there is no continuity between terminals "3" and "5".
If the continuity does not match the above, replace the relay. 2. Relay op eration check.
a) Apply battery voltage to terminals "1" and "2". b) Using an ohmmeter, confir m continuity between terminals "3" and "5".

If the continuity does not match the abo ve, replace the relay.

Charging system

Precautions

1. Ensure that the battery cables are connect ed to the corresponding terminals.

2. When rapidly charging the battery, di sconnect the cables from it terminals.

3. When taking measurements, do not us e a high-voltage tester with a large input with resistance.

4. Do not disconnect the battery terminal s while the engine is running gatele.

Vehicle Inspections

1, Check the specific gravity and lev el of the electrolyte in each section of the battery.

a) Check the specific gravity of the electr olyte of a fully charged battery at 20°C. Specific gravity.... 1.25 - 1.2 7 kg/dm³ If the ..... specific gravity is l ower, charge the battery.

b) Check the electrolyte level in each ce ll of the battery and, if necessary, top it up with distilled water.

2. Check the security of the battery termin al connections and that there is no corrosi on on them.

3. Check the fuses and fusible links.

4. Check the drive belt for the auxiliary units.

5. Inspect the wires leading to the alternator, check the security of their connections, the co ndition of the wiring, and also for any extrane ous noises coming from the alternator while t he engine is running.

6. Check the battery discharge warning la mp circuit.

a) Warm up the engine to operating tem perature and switch it off. b) Disc onnect all auxiliary units.

c) Turn the ignition key to the "ON" posi tion. The battery discharge warning la mp should illuminate. d) Start the engin e. The lamp sh ould go out. If these conditions are not met, check the warning lamp circuit.

7. Check the alternator electrical circuit wi thout load (at idle). Note: If you have a te ster for checking the alternator and the b attery, connect it according to the manuf acturer's instructions.

a) If a tester is not available, perform th e following operations:

- Disconnect the wire from the alternator "B" terminal and connect it to the negati ve terminal of the ammeter. Connect a w
- ire from the positive terminal of the am meter to the alternator "B" terminal.

- Connect the positive terminal of the volt meter to the "B" terminal of the generato r.
- Connect the negative terminal of the voltmeter to the "ground".

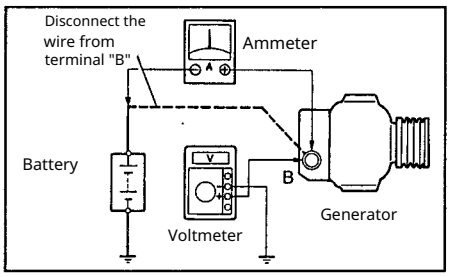

b) Measure the generator output voltage and the current, starting from idle speed up to 2000 rpm.

Current. ..... no more than 10 A.
Output voltage:
at 25°C. ..... 14.0–15.0 V.
at 115°C. ..... 13.5–14.3 V.
If the voltage does not fall within the specifie d limits, replace the voltage regulator.

If the voltage is lower than the specified value, perform the following operations:

- Connect terminal "F" to ground, start th e engine and measure the voltage at termi nal "B".

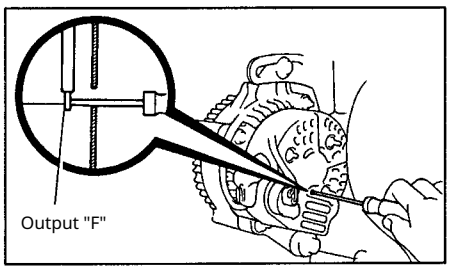

- If the voltage exceeds the specified v alue, replace the electronic voltage reg ulator.
- If the voltage is lower than the specifie d value, check the generator. 8. Mea sure the voltage at the generator output a nd the current in the "generator" circuit
- "battery" at 2000 rpm, with high-be am headlights on and switched-in the closed position of the ven- switch heater fan resistor ("NI").

Current ..... at least 30 A If t he current is less than the specified value, re pair the generator.

Note: With a fully charged battery, the disch arge current may be lower than the value s pecified.

Alternator disassembly

1. Remove the alternator cover on the rectifier block side.

a) Unscrew the nut and remove the output termi nal insulator.

b) Remove the rectifier plate.

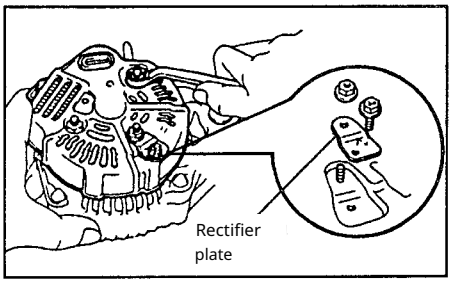

c) Unscrew the nuts securing the cover a nd remove the alternator cover on the r ectifier block side. 2. Remove the brus h holder and the electronic voltage regulat or.

a) Remove the brush holder cover.

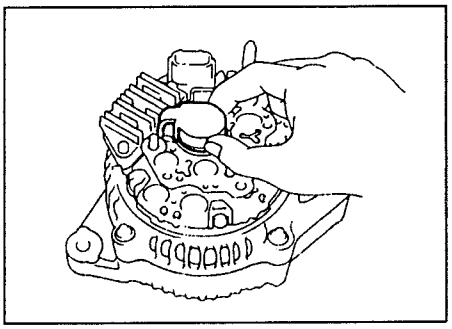

b) Unscrew the 5 screws and remove t he brush holder with its cover and the electronic voltage regulator.

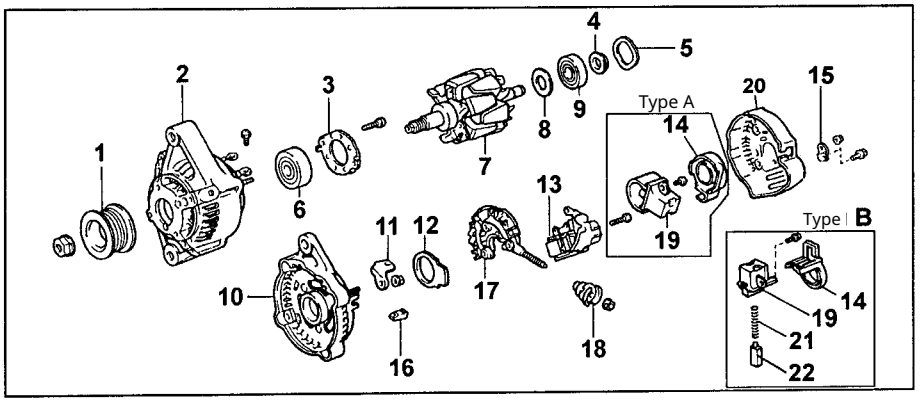

Alternator. 1 pulley, 2 alternator drive-side cover, 3 bearing retainer, 4 bearing cover, 5 washer, 6 front bearing, 7 rotor, 8 bearing cover, 9 rear bearing, 10 rectifier housing, 1 1 terminal, 12 sealing plate, 13 electronic voltage regulator, 14 brush holder cover,

15 - rectifier plate, 16 - insulator, 17 - rectifier unit, 18 - terminal insulator, 19 - brush holder, 20 - generator cover with side of the rectifier assembly, 21 - spring, 22 - brush.

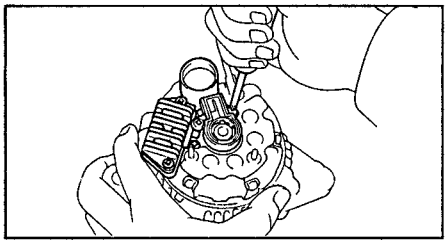

3. Remove the sealing plate.

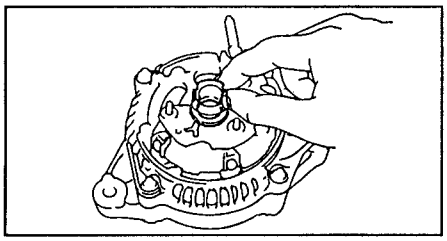

4. Unscrew the 4 screws, remove the rectifier block, the 4 rubber insulators, and the sealing plate.

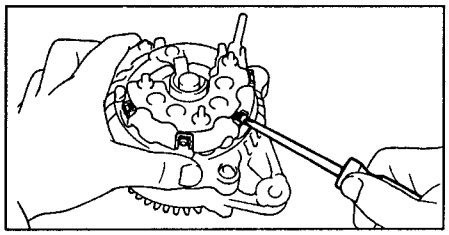

5. Remove the alternator pulley. a) While holding special tool "A" with a torque wrench, tighten special tool "B" (clockwise). Tightening torque..

..... 39 N·m

b) Make sure that special tool "A" is securely fastened together with the rotor.

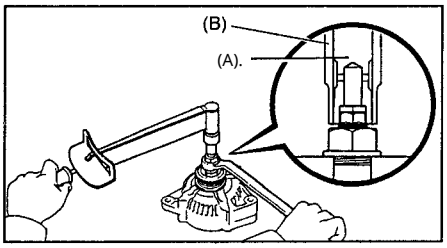

B) Clamp special tool
Place "C" as shown in the figure and install the generator on it.
c) To loosen the pulley retaining nut, turn special tool "A" in the direction shown in the figure.
Turn special tool "A" in the direction shown in the figure.

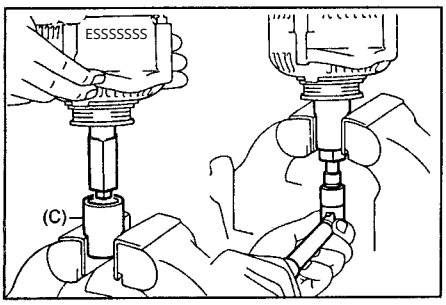

Warning: To avoid damaging the rotor shaft, do not loosen the pulley retaining nut more than half a turn.

d) Remove the alternator from the special fixture "C".
e) Unscrew special tool "B" and remove special tools "A" and "B".

f) Unscrew the pulley mounting nut and the alternator pulley.
6. Remove the rectifier assembly housing.
a) Unscrew the 4 nuts.

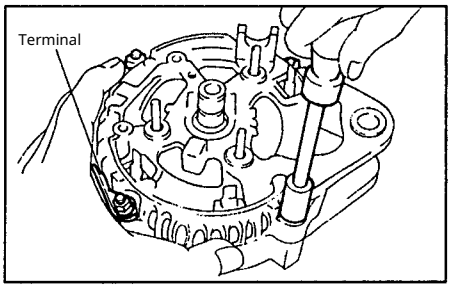

b) Using a puller, remove the rectifier block housing.

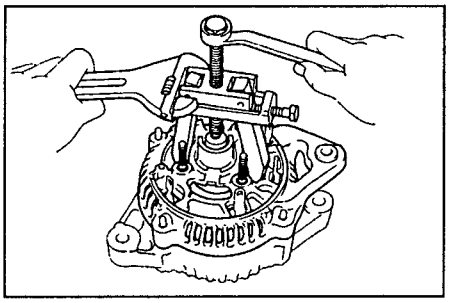

7. Remove the washer.
8. Remove the rotor from the generator housing.
from the drive side of the rotor.

Generator inspection
Rotor inspection
1. Check for a break in the field winding.
Using an ohmmeter, measure the resistance between the slip rings.
Rated resistance
(in cold condition)..2.7–3.1 ohms

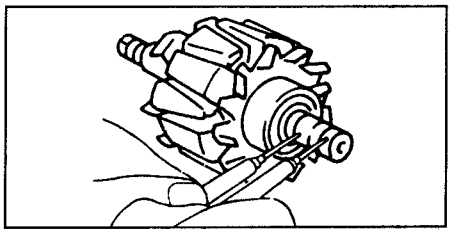

If the resistance tends toward infinity, i.e. the circuit is open, replace the rotor.

2. Check whether the field winding is shorted to ground. Using an ohmmeter, measure the resistance between the rotor pole and the slip ring.

If the resistance equals 0 (the circuit is shorted), replace the rotor.

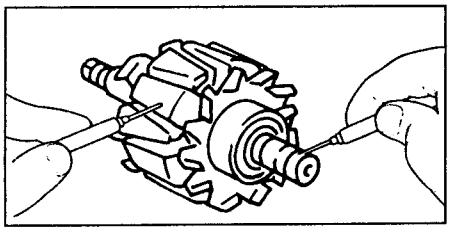

3. Inspect the slip rings.
a) Check the working surfaces of the slip rings. There must be no burrs or chips on them.
b) Using a caliper, measure the diameter of the slip rings.
Standard
diameter ..... 14.2 - 14.4 mm
Minimum permissible. ..... 12.8 mm

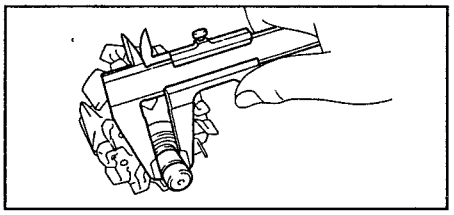

If the diameter of the slip rings is smaller than the minimum permissible value, replace the rotor.

Stator inspection
1. Check whether there is an open circuit in the starter winding.
Using an ohmmeter, measure the resistance between the terminals of the stator winding coils.

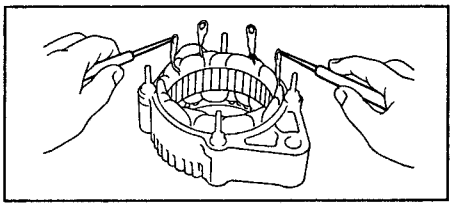

If if the resistance tends to infinity, i.e., the circuit is open, K
replace the stator.
2. Check whether the stator winding is shorted to ground.
Using an ohmmeter, measure the resistance between the stator housing and the stator coil terminals.

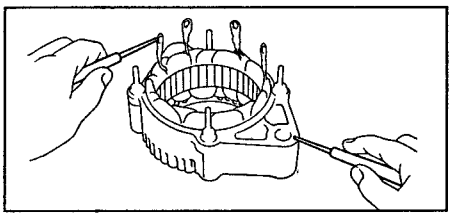

If the resistance equals "0", i.e. the circuit is shorted, replace the stator. Brush inspection
1. Measure the length of the protruding part of the brushes.
Nominal length ..... 10.5 mm
Minimum allowable ..... 1.5 mm

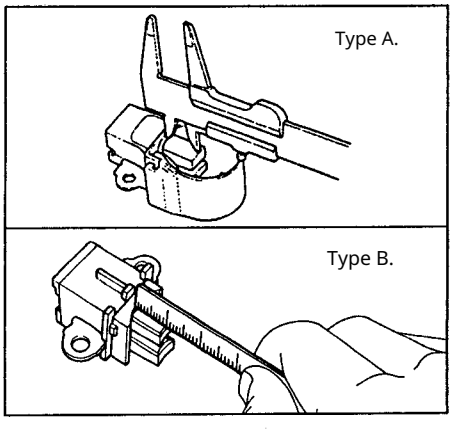

Rectifier block inspection 1. Checkin g the positive terminal. a) Connect the n egative probe of the ohmmeter to the positive terminal of the rectifier block, and connect the positive probe succes sively to each of the three remaining te rminals.

Ensure there is continuity (a closed circ uit) in all three measurements.

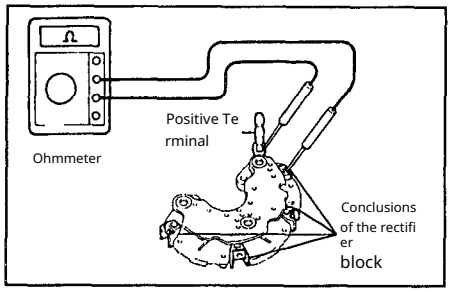

c) Reverse the polarity of the tester pro bes and repeat the procedure in item b) . Make sure that in all three measureme nts the circuit is open (resistance tendin g to infinity).

If the conditions are not met, replace t he rectifier assembly. 2. Che cking the negative ventilation. a) Con nect the positive probe of the ohmm eter to the negative terminal of the r ectifier assembly, and connect the ne gative probe sequentially to each of the three remaining terminals. Ensure conductivity (closed circuit) is prese nt in all three measurements.

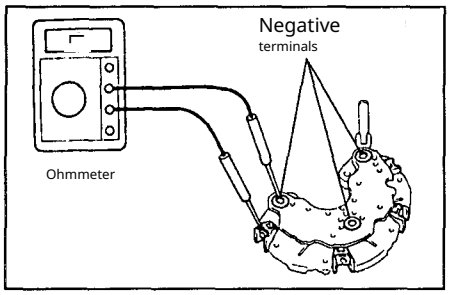

b) Reverse the polarity of the tester pro bes and repeat the procedure from ite m a). Make sure that in all three measu rements the circuit is open (resistance t ends to infinity).

If the conditions are not met, re- place the rectifier assembly.

Bearing inspection
1. Front bearing inspection.
Check that the front bearing rotates smoothly without binding.
2. If necessary, replace the bear- ing.

a) Unscrew the 4 screws and remove The bearing holder.

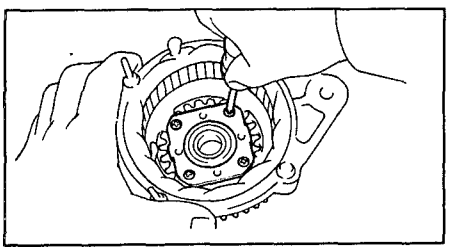

b) Using a press and a socket of the a ppropriate size, press out the front b earing.

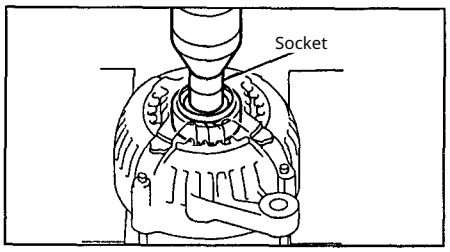

b) Using the special punch and a press, install the new front bearing into the generator housing from the drive side.

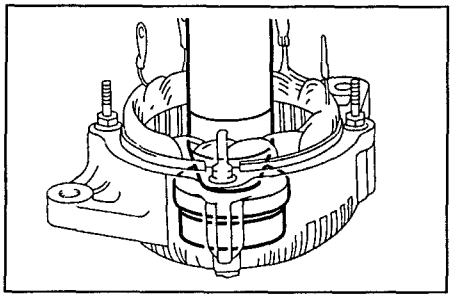

c) Install the bearing holder and tighten its 4 mounting screws.
Tightening torque: ..... 2.6 N·m

3. Rear bearing inspection.
Check that the rear bearing rotates smoothly without binding.
4. If necessary, replace the rear bearing.

a) Using a puller, remove the rear bearing and bearing cover. of the bearing.

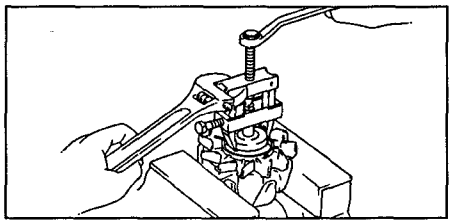

b) Using a press, install the new rear beari ng onto the rotor shaft.

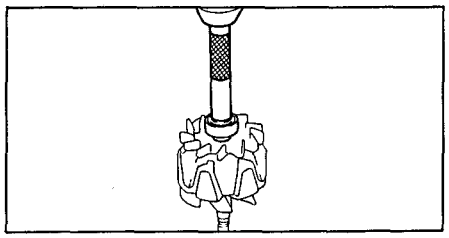

c) Install the bearing cover.

Generator assembly
1. Install the generator cover on the drive sid e onto the rotor. 2. Install the washer.
3. Lightly tap the rectifier block housing int o place with a hammer fitted with a plastic head. Secure the housing with four nuts. ra nslation> <translation>4. Ins tall the pulley.

a) Place the pulley onto the rotor shaft nose and hand-tighten the pulley retaining nut. fastening the pulley.

b) While holding special tool (A) with a torque wrench, tighten special tool (B). Tightening torque... ..... 39 N· m b) Check that the special tool (A) is se curely fastened to the rotor.

c) Clamp the special tool (C) in a vise an d place the generator on it.

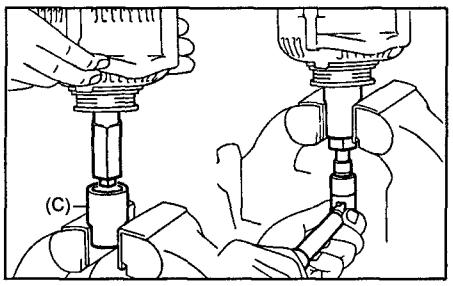

d) To tighten the pulley retaining nut, tur n the special tool (A) clockwise.

Tightening torque.... ..... 110 N·m

e) Remove the alternator from the spe cial tool (C).
f) Unscrew special tool (B) and remov e special tools (A) and (B).

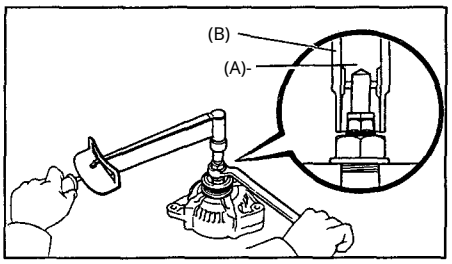

5. Install the sealing plate.

6. Install the rectifier assembly. (a) Install the insulators onto the wire terminals.

(b) Install the rectifier assembly and tigh ten its 4 mounting screws. 7. Install th e electronic voltage regulator and the brus h holder.
(a) Install the brush holder and tighten th e brush holder mounting bolts so that the gap between the brush holder and the el ectrical connector is 1 mm.

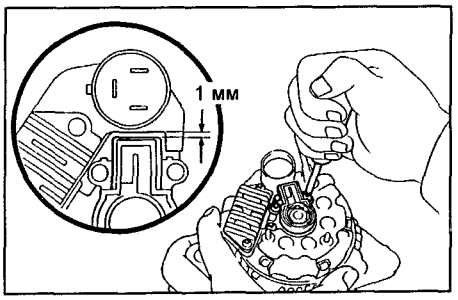

(b) Install the brush holder cover onto the br ush holder.
8. Install the alternator cover on the recti fier assembly side and tighten the 3 nuts securing the cover. Install the terminal i nsulator and tighten its mounting nut.

9. Check that the rotor turns smoothly wit hout binding.

Clutch

Bleeding the clutch hydraulic system

Note: After any work that allows air to enter the clutch hydraulic system, perform its bleeding.

Attention: do not allow brake fluid to get on painted surfaces. If brake fluid gets on a painted surface, wash it off immediately.

1. Check the brake fluid level in the reservoir and add fluid if necessary.

2. Connect the vinyl tube to the bleeding nipple.
Lower the other end of the tube into a container half-filled with brake fluid.

3. Bleed the clutch hydraulic system. a) Smoothly press the clutch pedal several times.
b) While holding the pedal depressed, loosen the bleed nipple. When brake fluid stops coming out, tighten the nipple.

c) Repeat this procedure until air bubbles no longer appear in the expelled brake fluid.

Checking and adjustment of the clutch pedal travel

1. Check the clutch pedal height—clearance from the floor.

Pedal height from the floor... ..... 136.4 - 146.4 mm

2. Loosen the locknut and, turning the retaining bolt, adjust to the required clutch pedal height. Tighten the locknut.

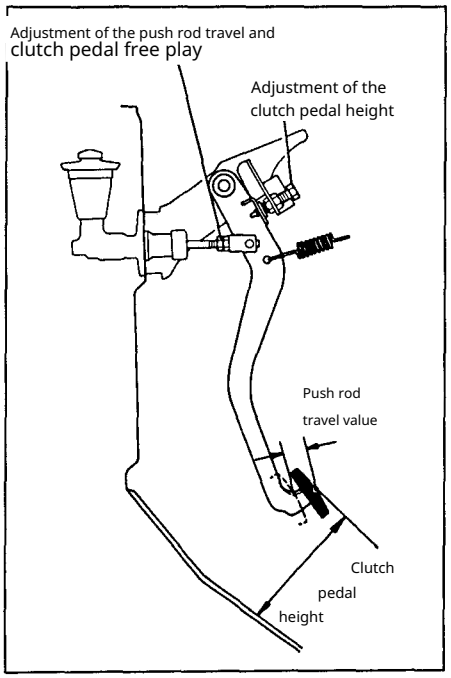

3. Press the pedal until resistance is felt and check the pedal free play.

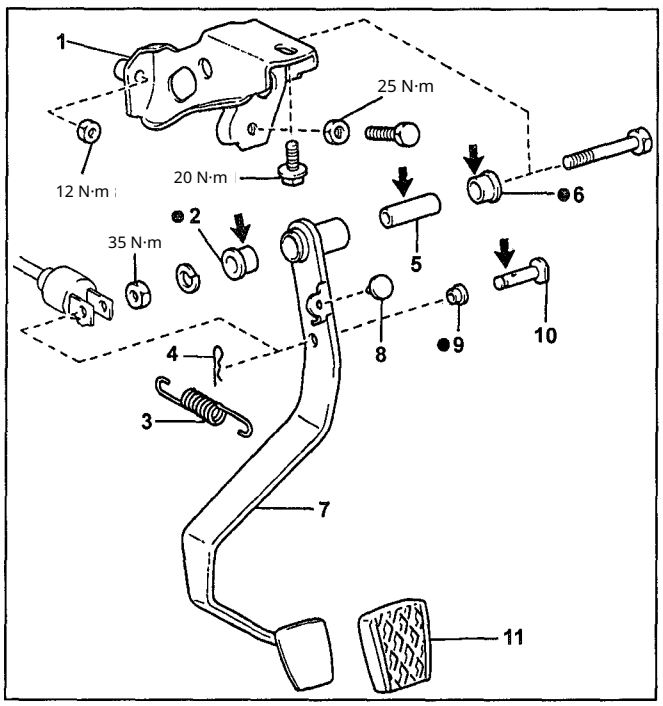

Clutch pedal.
1 - bracket,
2,6 - side bushing, 3 - return spring, 4 - split pin,
5 - center bushing, 7 pedal,
8 - stop,
9 - bushing,
10 - pin,
11 - pedal pad.

Note:
on the parts indicated by the arrows, apply a consistent lubricant.

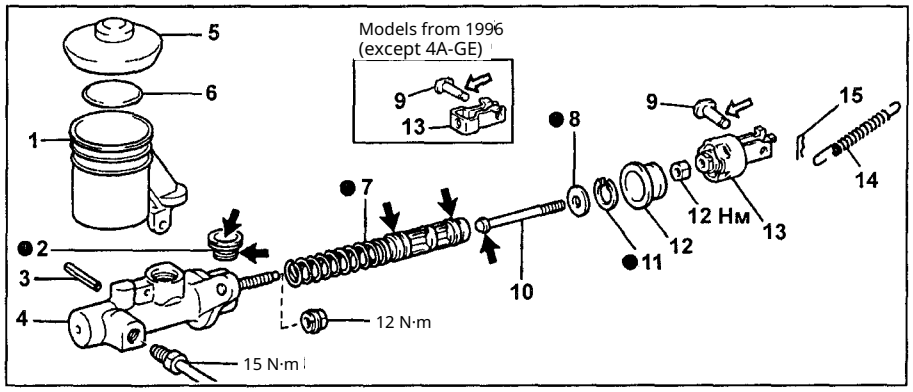

Clutch release master cylinder. 1 - reservoir, 2 - cap, 3 - pin, 4 - master cylinder body, 5 - filler neck cap-6 - float, 7 - piston with spring, 8 - retaining washer, 9 - pin, 10 - rod, 11 - spring washer, 12 - dust boot, 13 - fork, 14 - spring, 15 - cotter pin.

Pedal free play..... ··· 5–15 mm

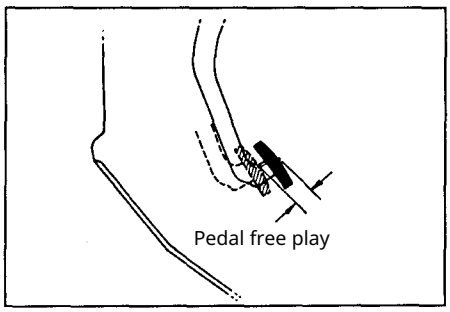

Press the pedal lightly until resistance increases and measure the free travel of the pushrod.
Pushrod free travel..... 1 - 5 mm

4. To adjust the free play of the clutch pedal and pushrod:
a) Loosen the locknut and, by turning the pushrod, set the required free play of the pedal and pushrod.
b) Tighten the locknut.
c) Check the pedal height.

Master cylinder

clutch release actuation

Removal and installation

Note: Install in the reverse order of removal.

1. Using a syringe, remove the fluid from the reservoir.

2. Using a special tool, disconnect the clutch hydraulic line and drain the fluid into a container. 3. Remove the cotter pin and the fork shaft. 4. Unscrew the two retaining nuts and remove the master cylinder.

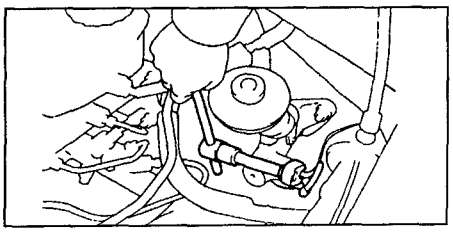

Disassembly
1. Remove the fork.
2. Remove the reservoir.
a) Using a drift and a hammer, drive out the split pin.

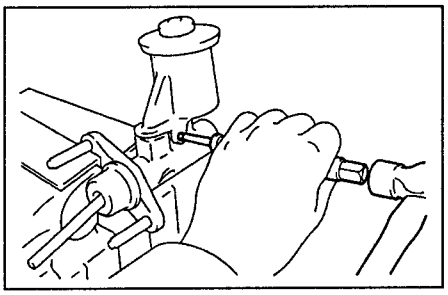

Note: when installing, ensure that the pi n projection does not exceed the specifi ed value. Pin projection..... 1.5–3. 5 mm

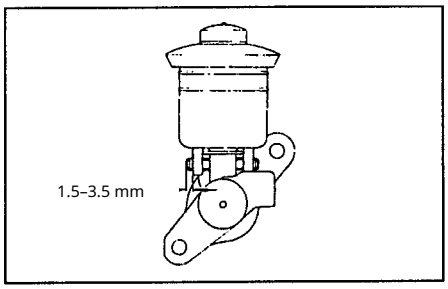

b) Remove the reservoir and the retaining ring-sealing.
3. Press the piston, then remove the snap ring a nd pull out the piston and its rod.

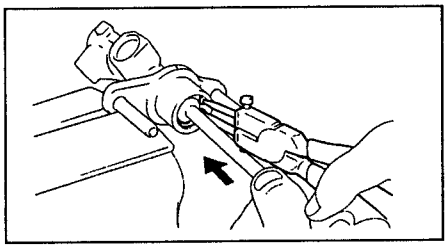

Slave cylinder

of the clutch

release mechanism

Removal
1. Using a special tool, disconnect the hydraulic drive tube and drain pour the fluid into the container.

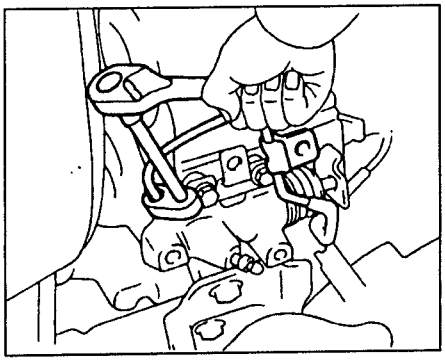

2. Unscrew the two bolts and remove the ra- slave cylinder.

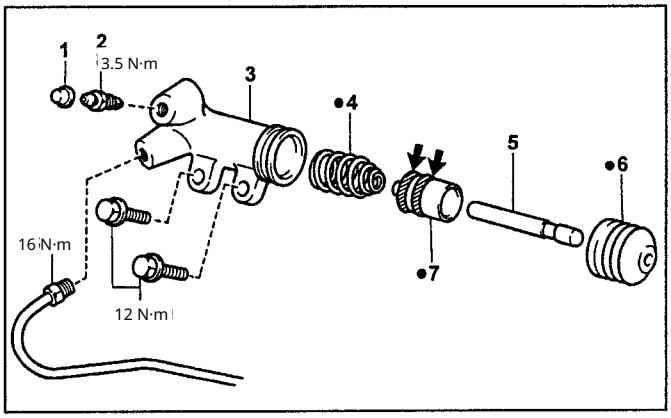

Slave cylinder of the clutch release mechanism.
1 - cap,
2 - bleed nipple,
3 - cylinder housing,
4 - spring,
5 - rod,
6 - dust boot,
7 - piston.
Note: apply brake fl uid to the parts indi cated by the arrows.

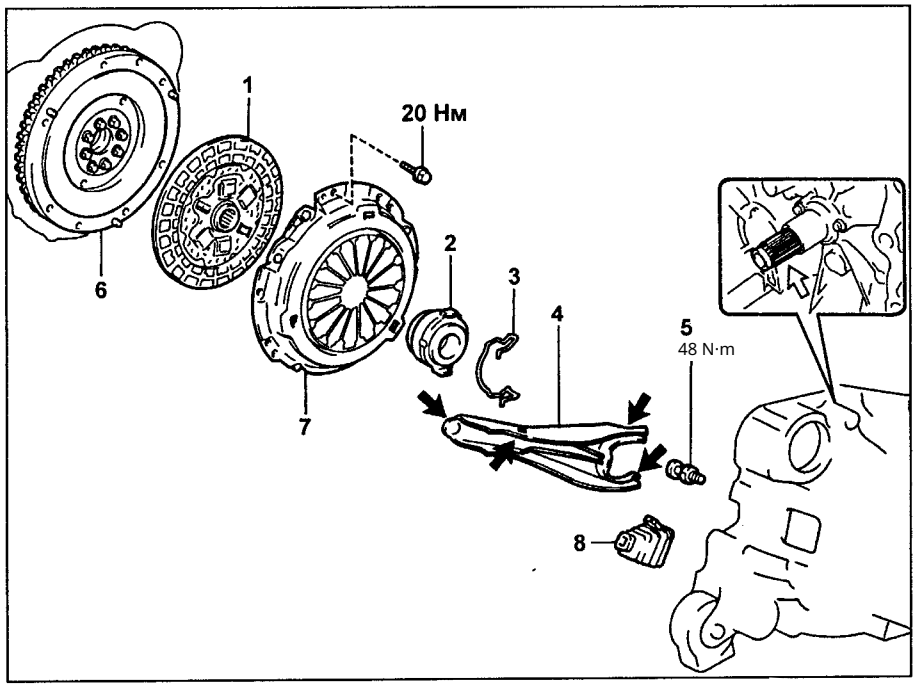

Clutch. 1 - clutch disc, 2 - release bearing, 3 - bearing mount brack- ing, 4 - clutch release fork, 5 - fork support, 6 - flywheel, 7 - clutch housing, 8 - cover.

Disassembly
1. Unscrew the bleed nipple.
2. Remove the dust boot and rod.
3. Blow compressed air into the working cy linder and remove the piston with the sprin g.

Inspection
Note: blow the disassembled part s of the clutch slave cylinder with compressed air.
1. Inspect the cylinder bore for absenc e of rust and scoring. Replac e the cylinder if necessary. 2. Check th e piston and seals for scratches, scorin g, cracks, or swelling. If replacing, use parts from the repair

kit.

3. Check the rod for any signs of wear an d damage. Replace the rod if necessary.

Assembly
1. Insert the piston with the spring into the cyli nder.
2. Put on the dust boot and insert the rod into the cylinder.
3. Install the bleed fitting.

Installation
1. Install the working cylinder and tight en the two bolts.
Tightening torque..... ..... 12 H. M 2. Using the special tool, connect the h ydraulic lines. Tightening torq ue.. 3. Fill the brake ..... *15 Н·м* fluid reservoir and bleed the system.

4. Check for any leaks.

Clutch

Removal
1. Remove the transmission (see the corresponding section).
2. Remove the clutch housing and disc:
a) Apply alignment marks to the clutch ho using and the flywheel.

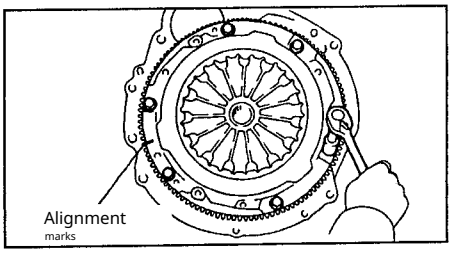

b) Unscrew each bolt sequentially by one turn to fully release the spring from its preload. c) Unscrew the bolts and remove the cover and the driven clutch disc. Caution: do not drop the clutch disc. 3. Remove the release bearing and the clutch release fork from the transmission.

a) Remove the release bearing together with the fork, then separate them.

b) Remove the fork boot.

Inspection

1. Inspect the clutch disc for wear and any damage.
Using a caliper, measure the depth of the rivet heads from the lining surface. Minimum rivet head depth

rivets... ..... 0.3 mm

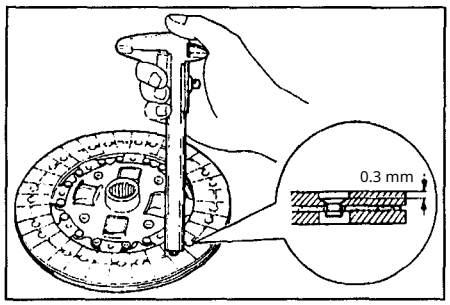

If the depth is less than the allowable limit, repair or replace the clutch disc.

2. Using an indicator, check the runout of the disc.

Maximum runout ....0.8 mm

If the maximum runout exceeds the allowable value, replace the clutch disc.

3. Using a dial indicator, check the flywheel runout. Maximum runout

..... .0.1 MM

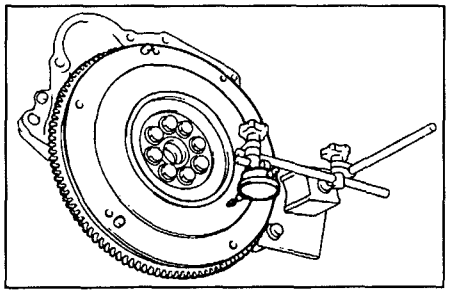

If the maximum runout exceeds the allowable value, replace the flywheel.

4. Using a caliper, measure the wear of the diaphragm spring fingers by depth and width.
Limit wear:
by depth
by width ..... 0.5 mm
..... 6.0 mm

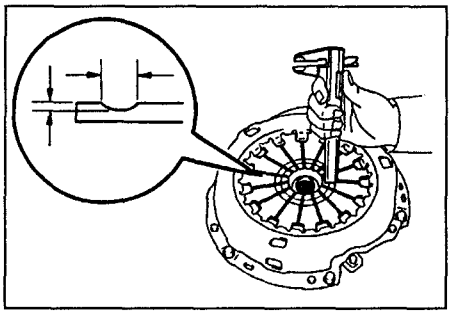

If the wear exceeds the permissible value, replace the clutch cover. 5. While turning the bearing by hand, apply force to it in the direction of rotation.

Note: The release bearing is lubricated for life and does not require cleaning or additional lubrication.

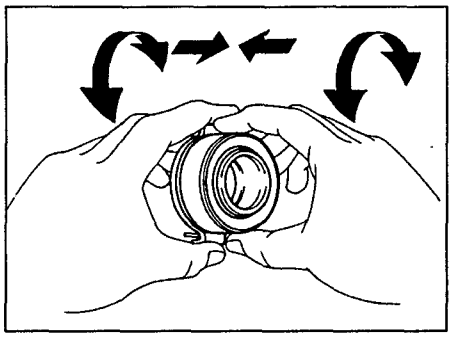

If the bearing sticks or turns with difficulty, replace it.

Installation

1. Install the clutch disc and clutch cover onto the flywheel.
a) Using a centering sleeve, install the disc and clutch cover.

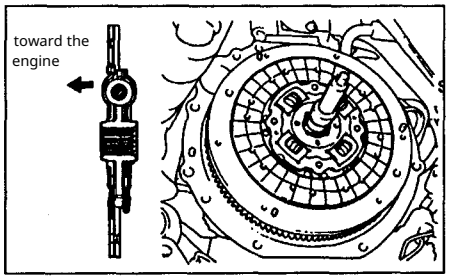

6) Align the alignment marks on the clutch cover and the flywheel.
b) Tighten the clutch cover mounting bolts in sequence in
in several stages.

Tightening torque.. ..... 20 Н·м

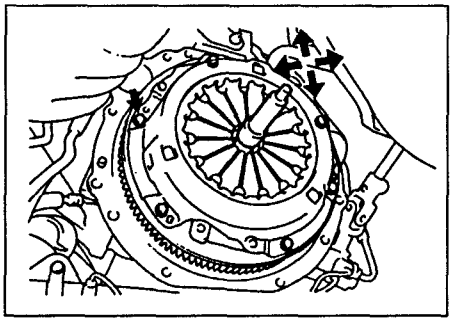

2. Check the relative position of the ends of the diaphragm spring fingers.
Maximum deviation from the plane ..... 0.5 mm

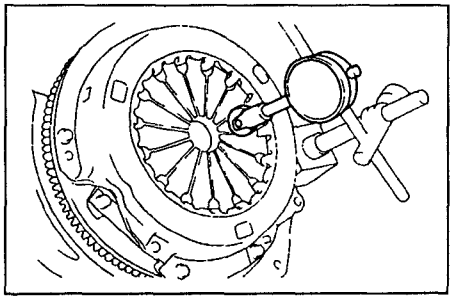

If the deviation exceeds the permissible value, adjust the relative positions of the ends of the spring leaves.

3. Apply grease to the surfaces of the following parts:
- the clutch release fork and release bearing at their points of contact;
- the clutch release fork and the slave cylinder rod at the points of their contact.
- at the ball joint point of the clutch release fork.
- on the splines of the clutch disc.

4. Install the release bearing on the clutch release fork and fit them to the gearbox.
5. Install the gearbox.

Manual transmission

4WD transmission operation diagram

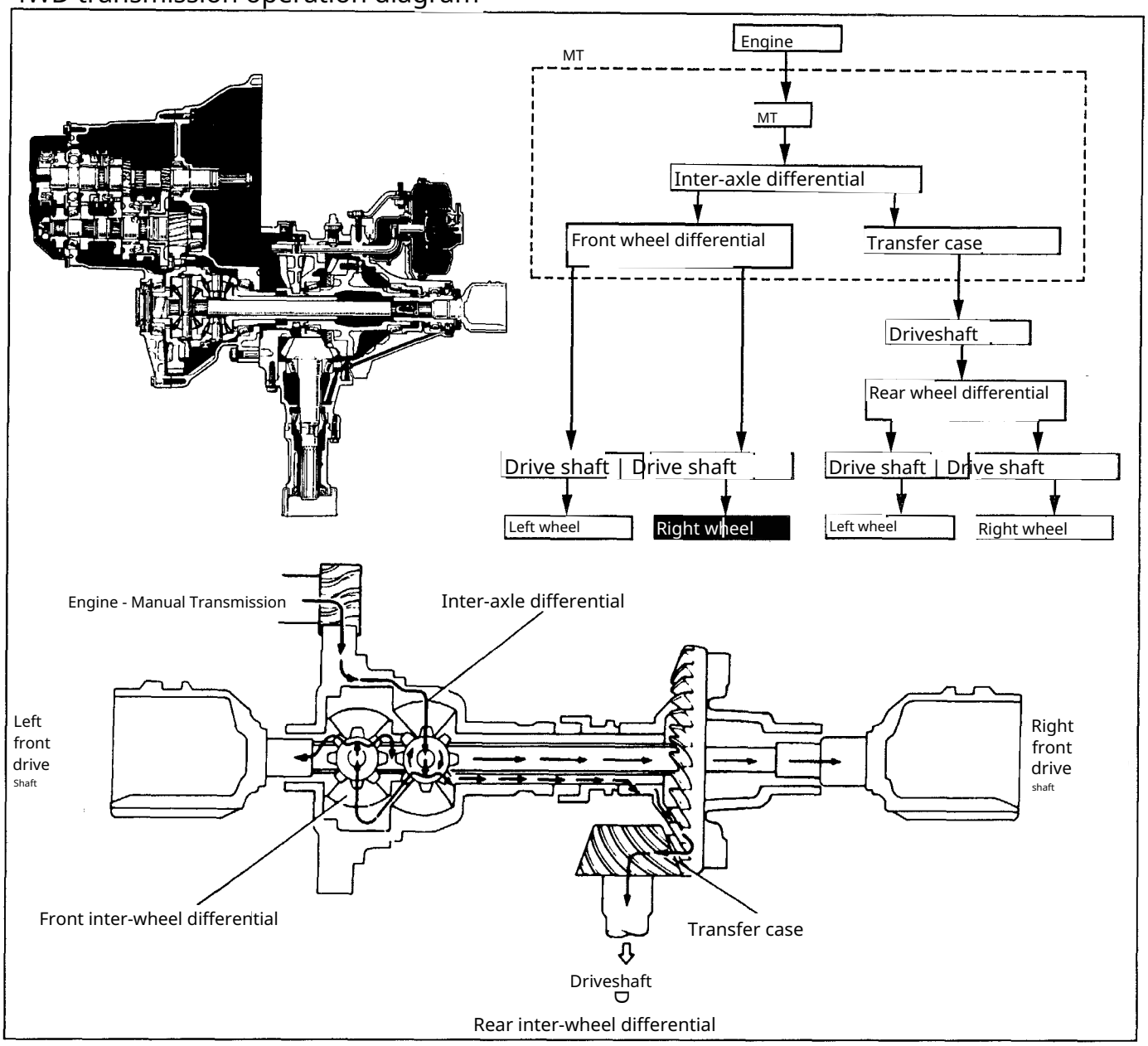

Inspection and replacement

of oil in the manual transmission and

transfer case

1. Park the vehicle on a level, horizont al surface.
2. Unscrew the filler plug. Make sure tha t the oil level in the transmission housin g is below the cut edge of the filler plug opening. If necessary, add oil to the hou sing.

3. To drain the oil, unscrew the filler and d rain plugs. The transmission must be war med up. (Be careful not to burn yourself w ith hot oil). After draining the oil, screw in and tighten the drain plug.

Note: The transmission type is stamped on the aluminum plate attached to the engine compartment bulkhead in the "TRANS/AXLE" line.

Oil grade according to API:
C50, C56, C160 ..... *GL-3*
E55F, E59F. *GL-5*
Recommended viscosity .....*SAE 75W-90*
Filling capacity:
E55F+2AV, E59F+EF2AV. ..... 4.5 L
S50, S56.. ..... 1.9 L
C160 ..... 2.1 L

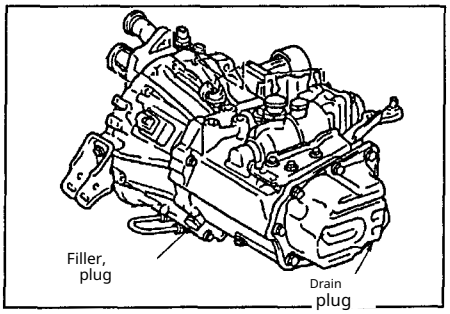

C50, C56.

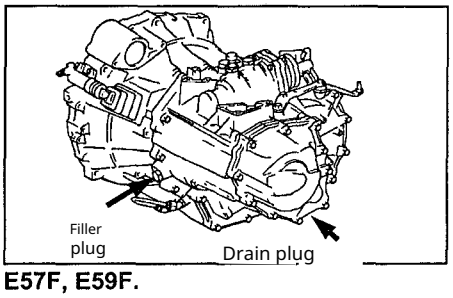

E57F, E59F.

4. After installing the filler plug, check t he transmission for absence of oil leaks or damage.

Removal and installation

of the transmission assembly
Note: remove the transmission in the sequence shown in the corresponding illustration "Removing the transmission".

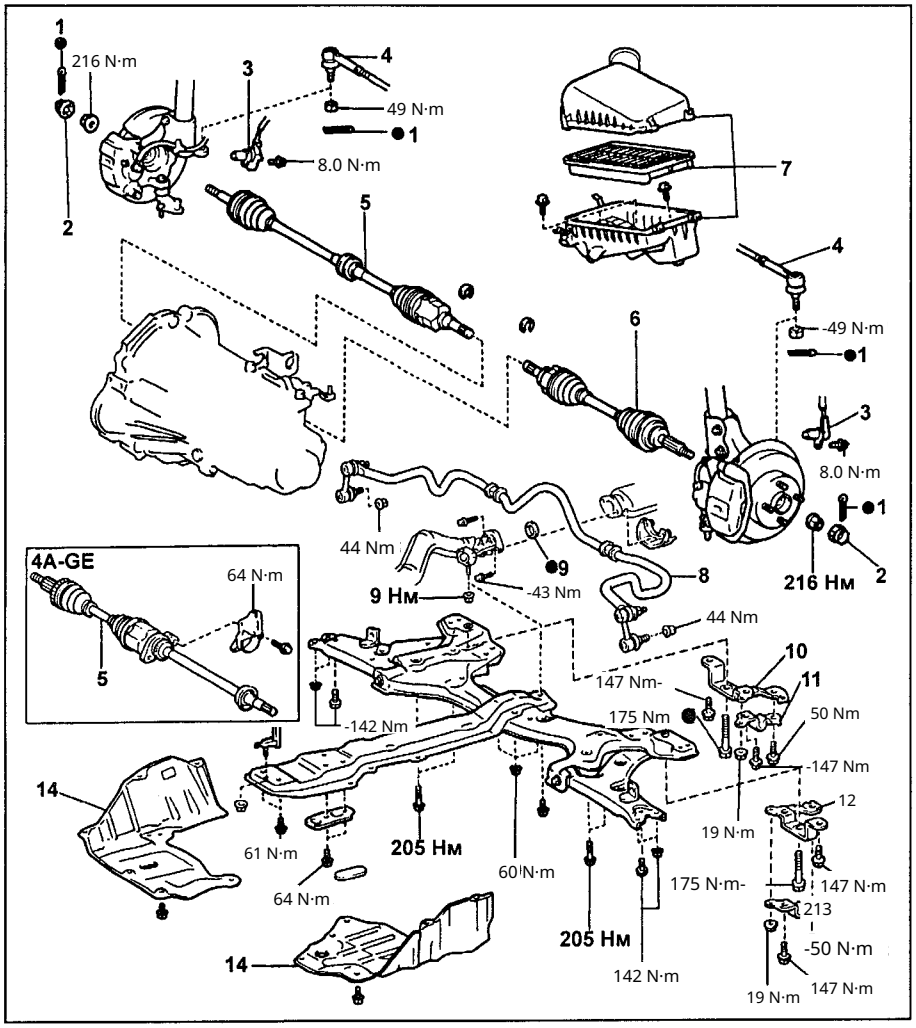

Removing the transmission. 1 - split pin, 2 - locknut, 3 - speed sensor, 4 - steering tie rod end, 5, 6 - drive shaft, 7 - air filter assembly, 8 - anti-roll stabilizer, gasket, 10, 12 - lower arm bracket, 11, 13 - stabilizer bracket, 14 - lower protection cover

9 -

protection.

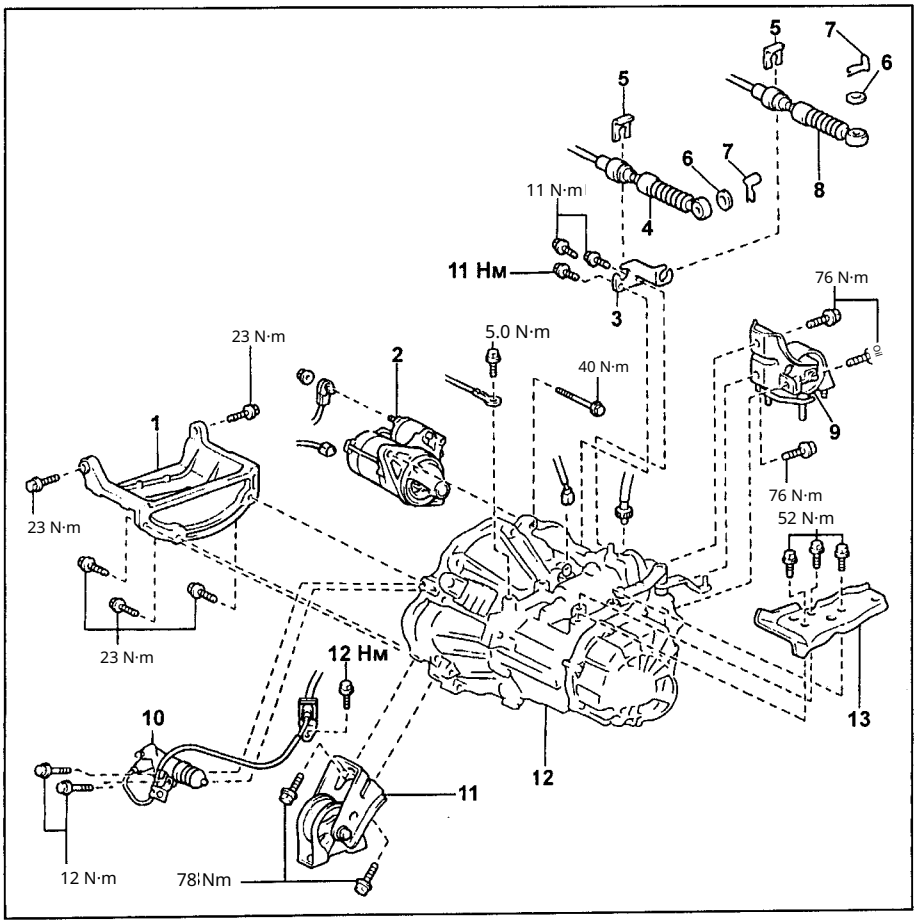

Removal of the transmission (except C160) (continued). 1 bracket, 2 - starter, 3 bracket, 4 gear shift cable shift cable, 5 retainer-lock, 6 - washer, 7 split pin, 8 gear selection cable, 9 rear engine mount, 10 - clutch release actuator working cylinder, 11 - front engine mount, 12 transmission assembly, 13 - left engine mount bracket

engine.

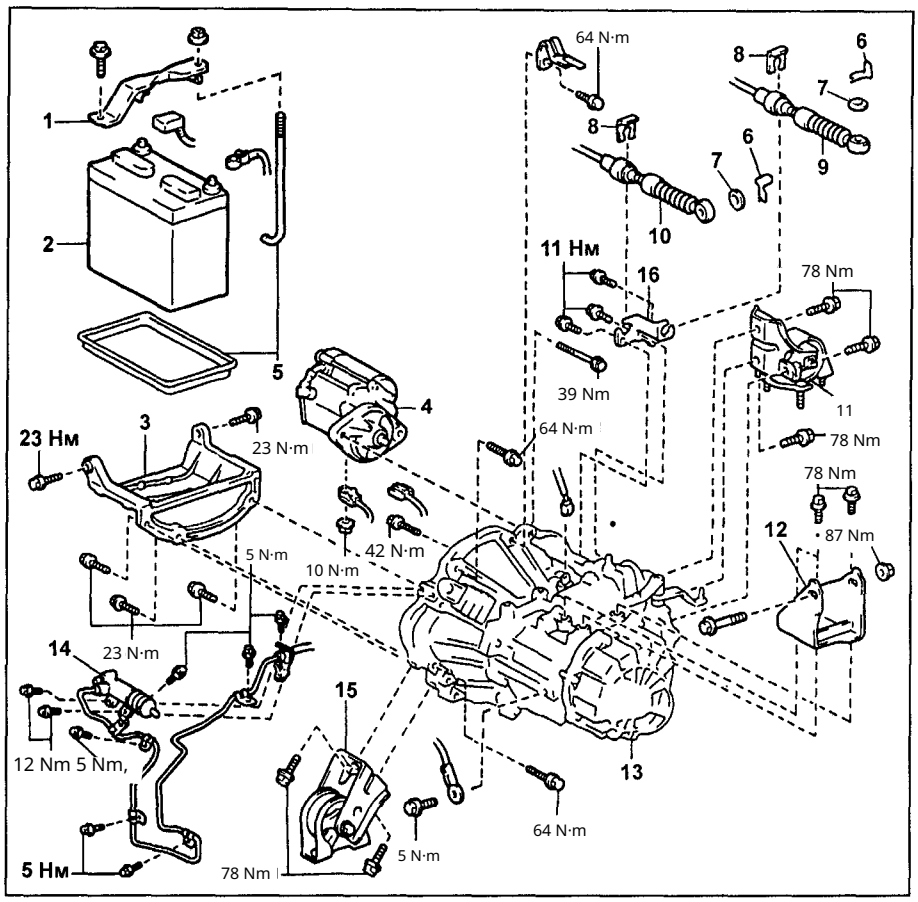

Removal of the transmission (S160, since 1997) (continued). 1 bracket, 2 - battery, 3 - bracket, 4 - starter, 5 - battery tray, 6 - split pin, 7 - washer, 8 - retainer, 9 - gear selection cable, 10 - gear shift cable, 11 - engine mount, 12 - left engine mount bracket, 13 transmission assembly, 14 - clutch release actuator working cylinder, 15 - rear engine mount.

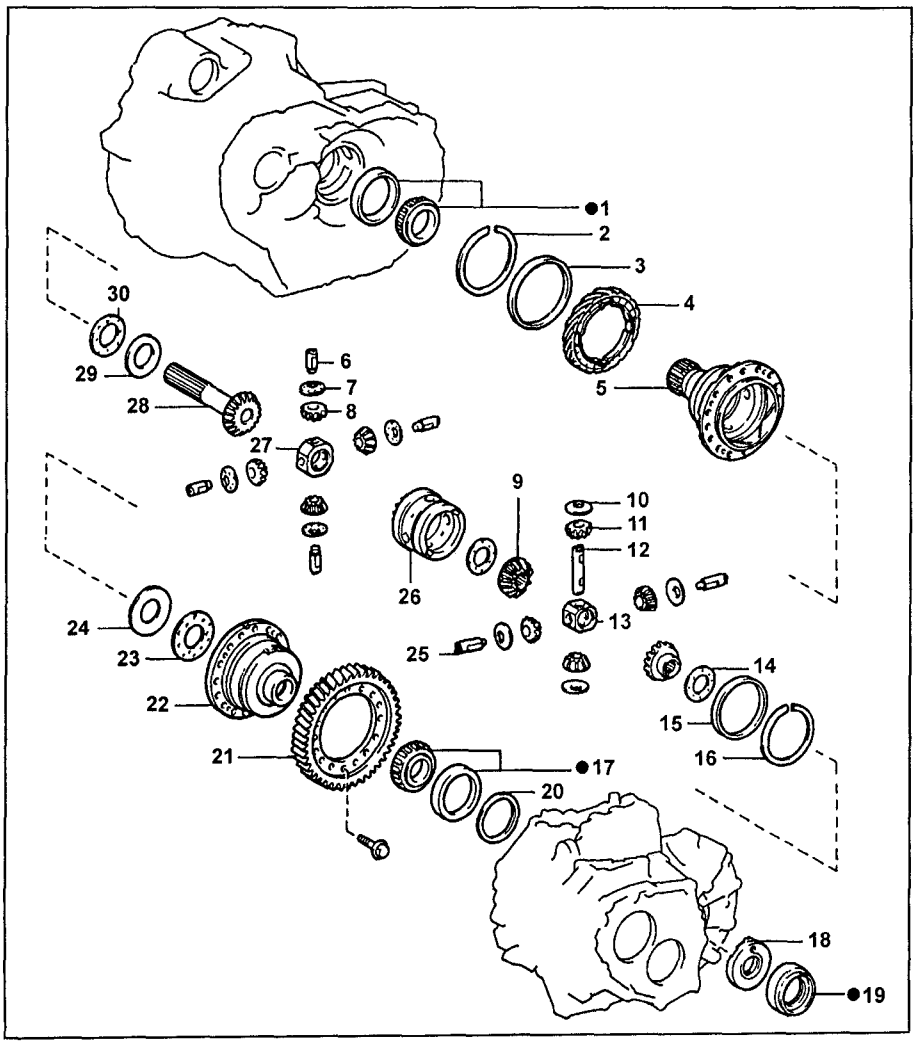

Differential (E55F, E55F5, E59F). conical roller bearing, 2 - snap ring, 3 - spacer sleeve, 4 - speedometer drive gear, 5 - front inter-axle differential cup No. 1, 6 - inter-axle differential satellite shaft, 7 - thrust washer of the inter-axle differential satellite, 8 - inter-axle differential satellite, 9 - front differential axle gear, 10 - thrust washer of the front differential satellite,

11 - front differential satellite, 12 - front differential satellite shaft No. 2, 13 - holder of the front differential satellite shafts, 14 - thrust washer of the front differential axle gear, 15 - spacer sleeve, spacer sleeve, 16 - snap ring, 17 - conical roller bearing, 18 - oil deflector, 19 - oil seal, 20 - adjusting shim, 21 - driven gear of the final drive, 22 - inter-axle differential cup No. 2, 23 - thrust washer of the inter-axle differential axle gear, 24 - conical spring washer, 25 - front differential satellite shaft, 26 - front differential cup,

27 - holder of the inter-axle differential satellite shafts, 28 - inter-axle differential axle gear, 29 - conical spring washer, 30 - thrust washer of the inter-axle differential axle gear.

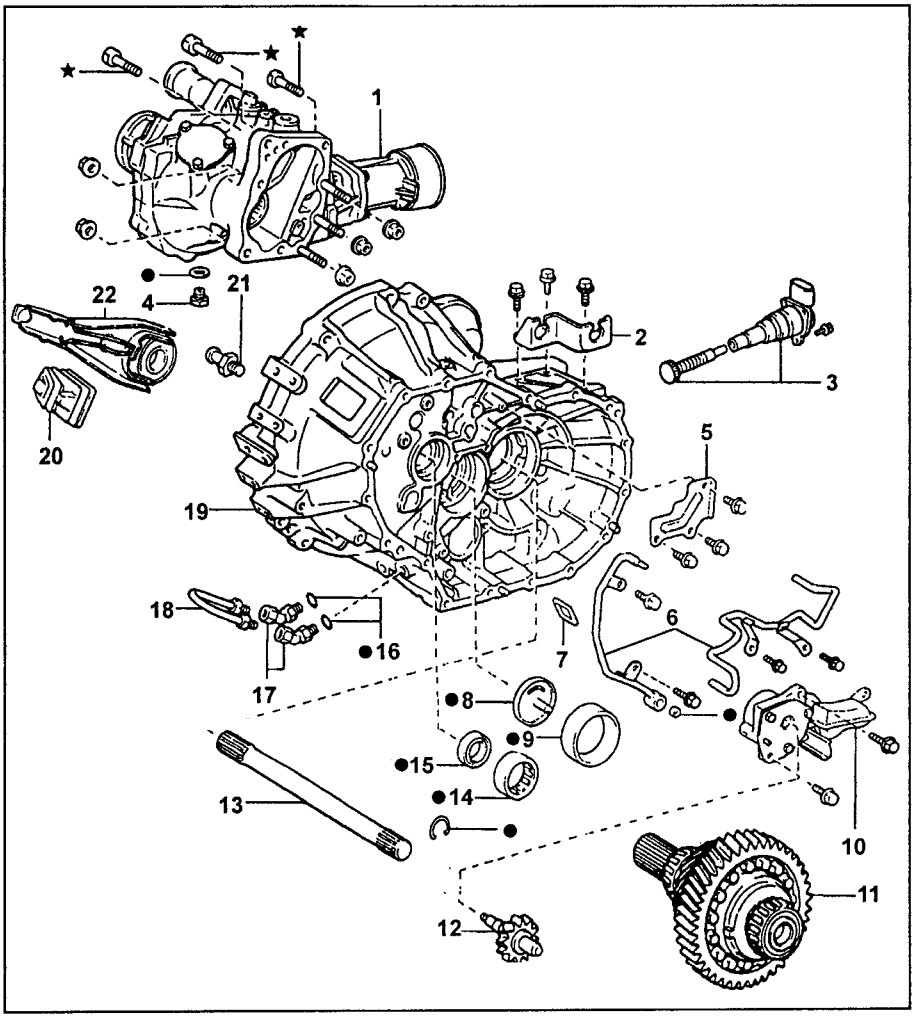

Gearbox (E55F, E59F). transfer case assembly, 2 - bracket supporting the shift lever housing, 3 - speed sensor adapter, 4 - drain plug, 5 - oil pickup, 6 - oil pump tube, 7 - magnet, 8 - secondary shaft cover, 9 - outer ring of the tapered roller bearing, 10 - oil pump assembly, 11 - differential, 12 - oil pump drive gear, 13 - intermediate shaft of the axle gears, 14 - front bearing of the primary shaft, 15 - front oil seal, 16 - radial seal, 17 - adapter, 18 - oil cooler tube, 19 - clutch housing, 20 - cover,

21 - Clutch release fork support, 22 - fork assembled with the clutch release bearing.

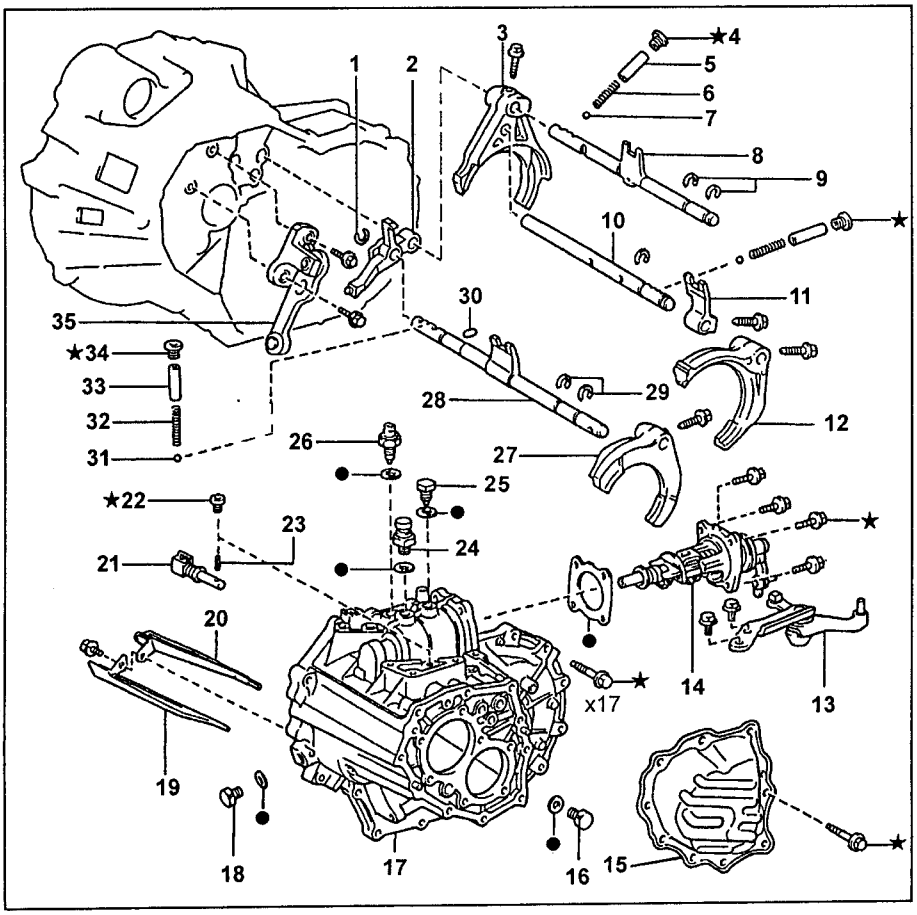

Transmission (E55F, E55F5, E59F) (continued). 1 - circlip, 2 - reverse gear shift gate, 3 - shift fork for gear selector №1, 4 - plug, 5 - seat, 6 - spring, 7 - ball, 8 - rod of shift fork №1, 9 - circlip, 10 - rod of shift fork №2, shift selector, 11 - shift head, 12 - shift fork №2, 13 - crank lever for gear selector №2, 14 - selector lever shaft assembly, 15 - transmission case cover, 16 - drain plug, 17 - transmission housing, 18 - filler plug, 19 - oil intake №1, 20 - oil intake №2, 21 - reverse gear engagement limiter

reverse gear engagement, 22 - plug, 23 - pin, 24 - breather, 25 - locking bolt of the selector lever shaft, 26 - reverse light switch, 27 - shift fork №3,

gears
28 - rod of shift fork №3,
29 - circlip,
30 - locking pin, 31 - ball,
32 - spring, 33 - seat, 34 - plug, 35 - bracket of the reverse gear shift gate assembly.

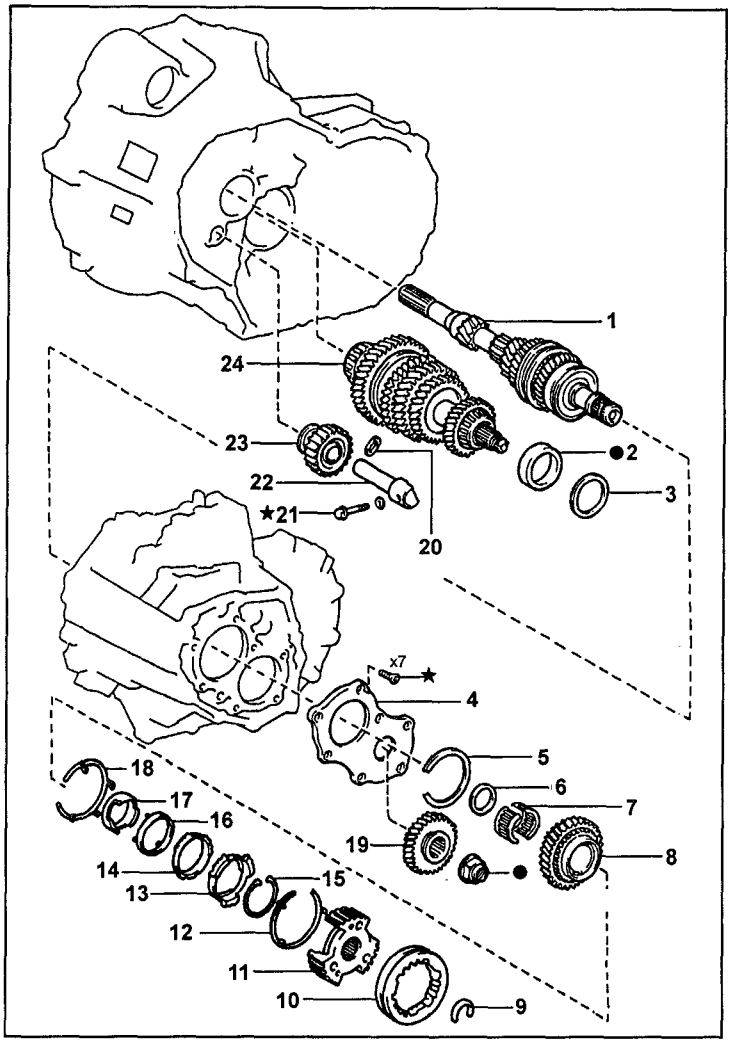

Transmission (E55F, E55F5, E59F) (continued).
1 - primary shaft assembly, 2 - outer ring of tapered roller bearing, 3 - adjusting ring,
4 - rear bearing retainer, 5 - snap ring,
6 - spacer, 7 - needle bearing, 8 - fifth gear, 9 - snap ring, 10 - synchronizer hub No. 3, 11 - synchronizer hub No. 3, 12 - synchronizer spring, 13 - synchronizer ring, 14 - synchronizer outer ring, 15 - snap ring, 16 - synchronizer middle ring, 17 - synchronizer inner ring, 18 - synchronizer spring, 19 - driven fifth gear, 20 - thrust washer, 21 - locking bolt, 22 - reverse idler gear shaft, 23 - reverse idler gear, 24 - secondary shaft.

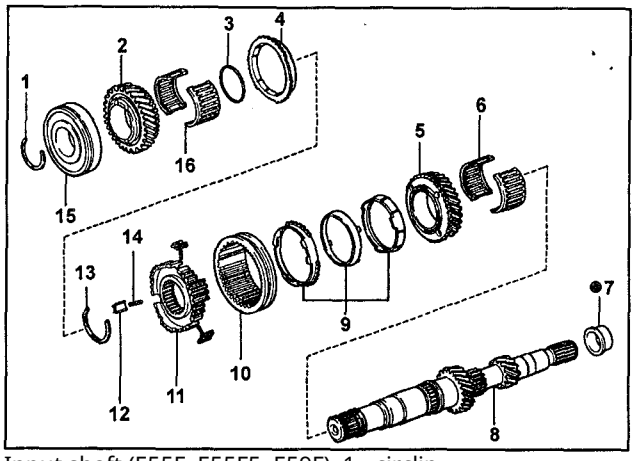

Input shaft (E55F, E55F5, E59F). 1 - circlip,
2 - fourth gear wheel, 3 - spacer sleeve, 4 - synchronizer ring,
5 - third gear wheel, 6, 16 - needle bearing, 7 - inner ring of the front bearing of the input shaft, 8 - input shaft,
9 - synchronizer ring, 10 - synchronizer hub №2,
11 - synchronizer hub sleeve №2,
12 - key, 13 - circlip, 14 - spring,
15 - rear bearing.

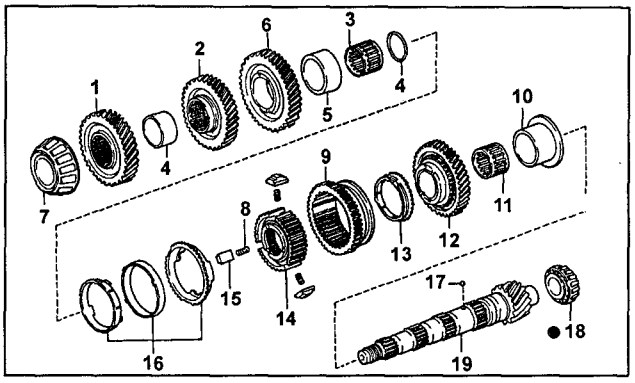

Secondary shaft (E55F, E55F5, E59F). 1 - driven fourth gear, 2 - driven third gear, 3 - needle bearing, spacer sleeve, 5 - inner ring, 6 - second gear, 7 - secondary shaft rear bearing, 8 - spring, 9 - synchronizer hub No. 1, 10 - inner bearing ring of the first gear, 11 - needle bearing, 12 - first gear, 13 - synchronizer ring, 14 - synchronizer hub No. 1, 15 - wedge (woodruff key), 16 - synchronizer ring, 17 - ball, 18 - secondary shaft front bearing, 19 - secondary shaft.

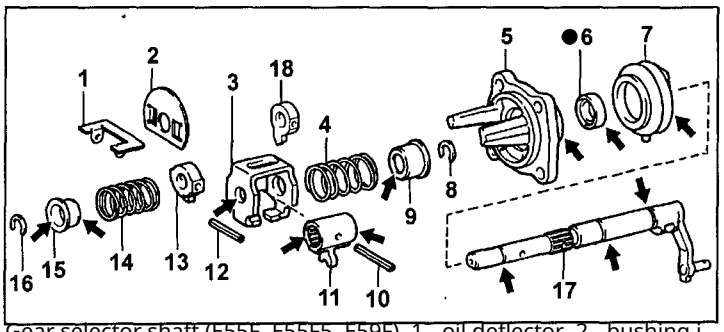

Gear selector shaft (E55F, E55F5, E59F). 1 - oil deflector, 2 - bushing, inner/intermediate plate, 3 - O

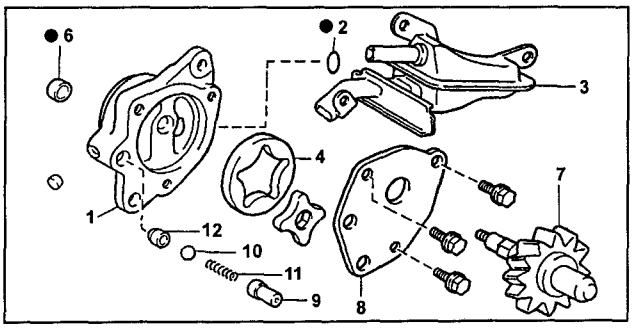

il pump (E55F, E55F5, E59F). 1 - housing of front shift lever No.1, 4 - oil pump rotor, 2 - spring, dust boot, 8 - snap-ring, 3
5 - cover, shaft sealing ring, 6 - oil seal, 7 - or of the oil pump, 5 - driving rotor of the oil pump, 9 - spring seat, 10 - pin, 11 - inner shift lever No.1, 12 - pin, 13 - inner shift lever housing No.2, 14 - spring, 15 - oil pump cover, 16 - circlip, 17 - selector lever rod, 18 - inner selector lever (some models), 7 - drive gear of the oil passage, 8 - oil filter, 4 - driven rotor of the oil pump, 9 - spring seat, 10 - ball, 11 - spring, 12 - relief valve.

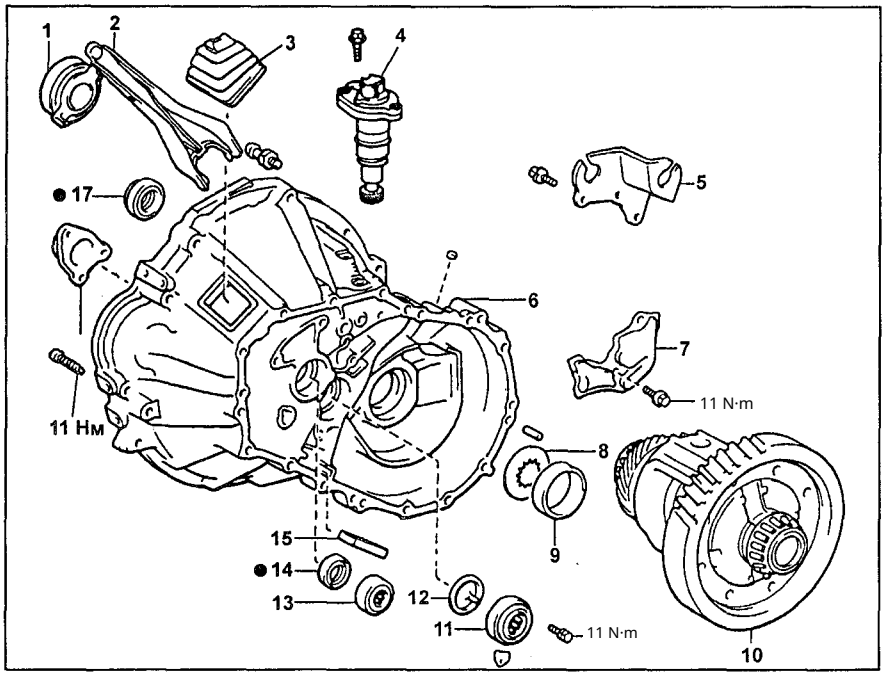

Transmission (C50, C56, C160). 1 - release bearing, 2 - clutch release, 3 - plug case, 4 Speed sensor, 5 bracket support of the shift lever housing, 6 clutch housing, clutch housing, oil pickup, 8 adjustment washer, 9 outer race of the outer race of the bearing, 10 - differential, 11 front bearing of the secondary shaft, 12 - secondary shaft cover, 13 - front bearing of the primary shaft, 14 - ng of the primary shaft, 14 - oil seal, 15 magnet, 16 holder of the primary shaft bearing, 17 - oil seal.

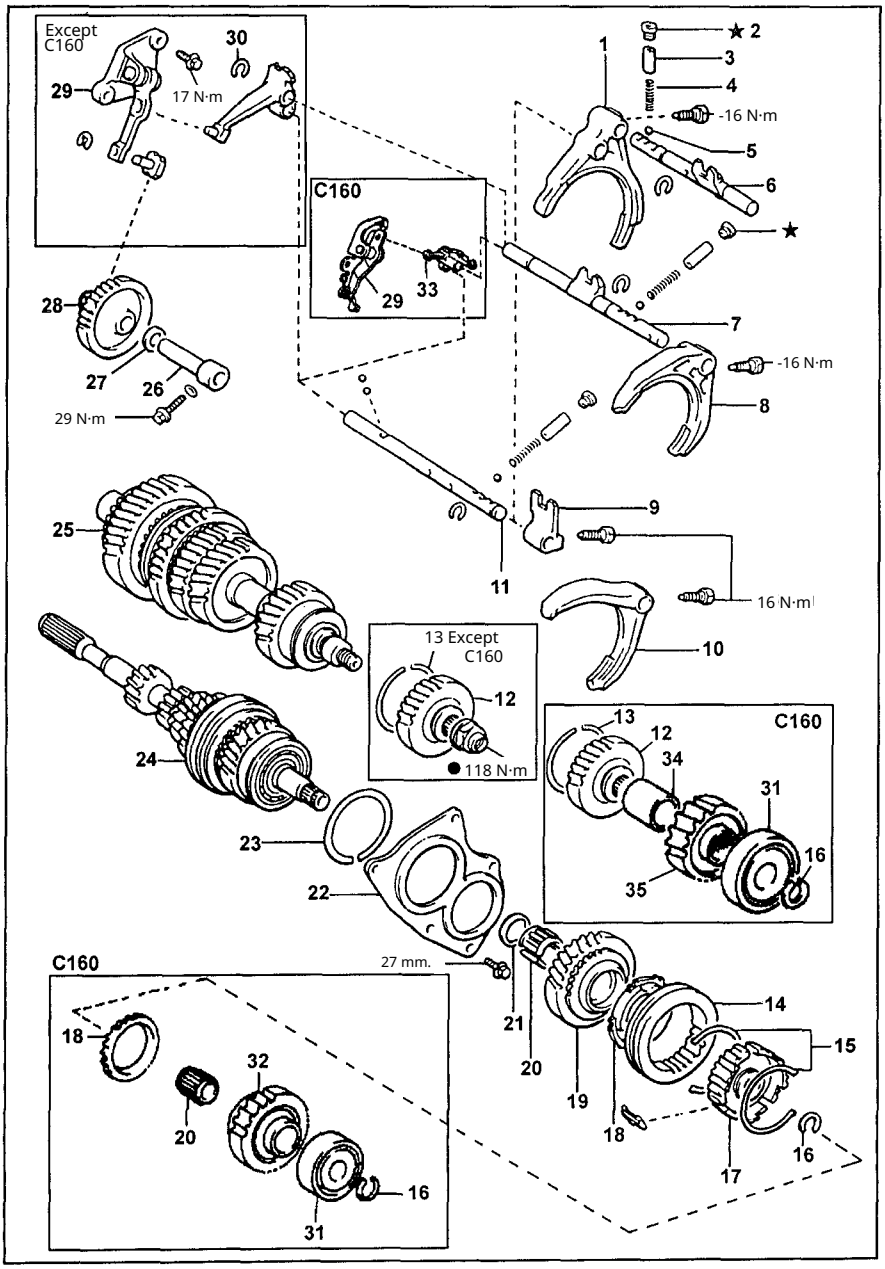

Transmission (C50, C56, C160) (continued). 1 Shift fork No. 1, 2 - plug, 3 seat, 4 - spring, 5 ball, 6 - rod of shift fork No. 1, 7 - rod of shift fork No. 3, 8 - shift fork No. 3, 9 shift head, 10 - shift fork No. 2, 11 - rod of shift fork No. 2, 12 driven gear of fifth gear, 13 - snap ring, 14 - synchronizer hub No. 3, 15 - synchronizer spring, 16 snap ring, 17 sy - nchronizer hub No. 3, 18 synchronizer ring, 19 fifth gear, 20 - needle bearing, 21 spacer, 22 - rear bearing retainer, 23 - snap ring, 24 - primary shaft assembly, 25 secondary shaft assembly, 26 - reverse idler shaft, 27 - thrust washer, 28 - reverse idler gear, 29 reverse gear selector rail, 30 snap ring, 31 bearing, 32 sixth gear, 33 - rod of the reverse gear engagement fork, 34 bushing, driven gear of sixth gear

35 - gear.

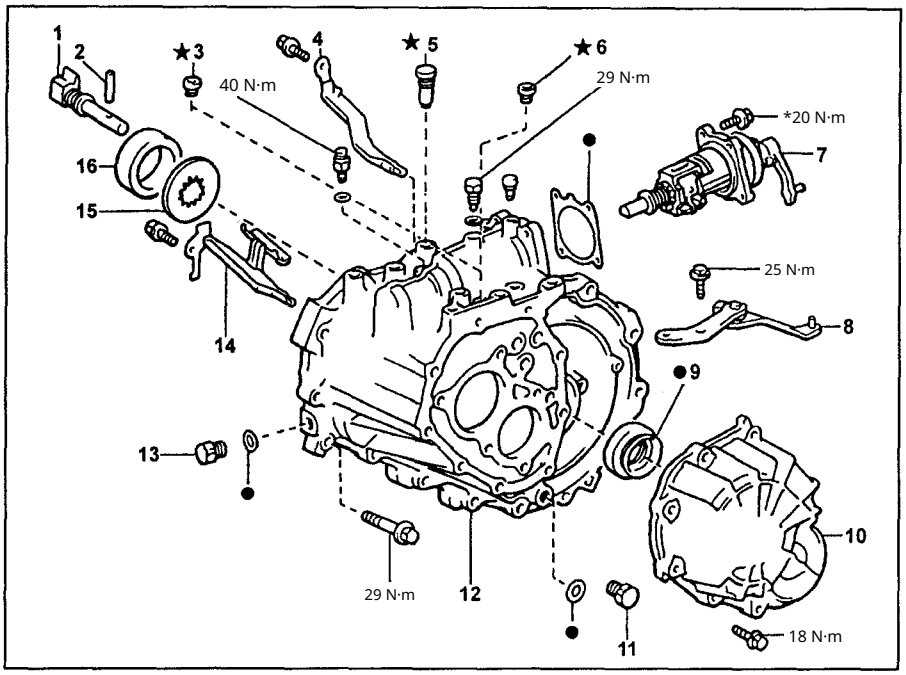

Transmission (C50, C56, C160) (continued). 1 - reverse gear engagement stop, 2 - pin, 3 - plug, 4 - oil intake screen No. 2, 5 - locking device, 6 - plug, 7 - shift lever shaft assembly, 8 - crank shift lever, 9 - oil seal, 10 - transmission housing cover, 11 - drain plug, 12 - transmission housing, 13 - filler plug, 14 - oil intake screen No. 1, 15 - washer, 16 - outer ring.

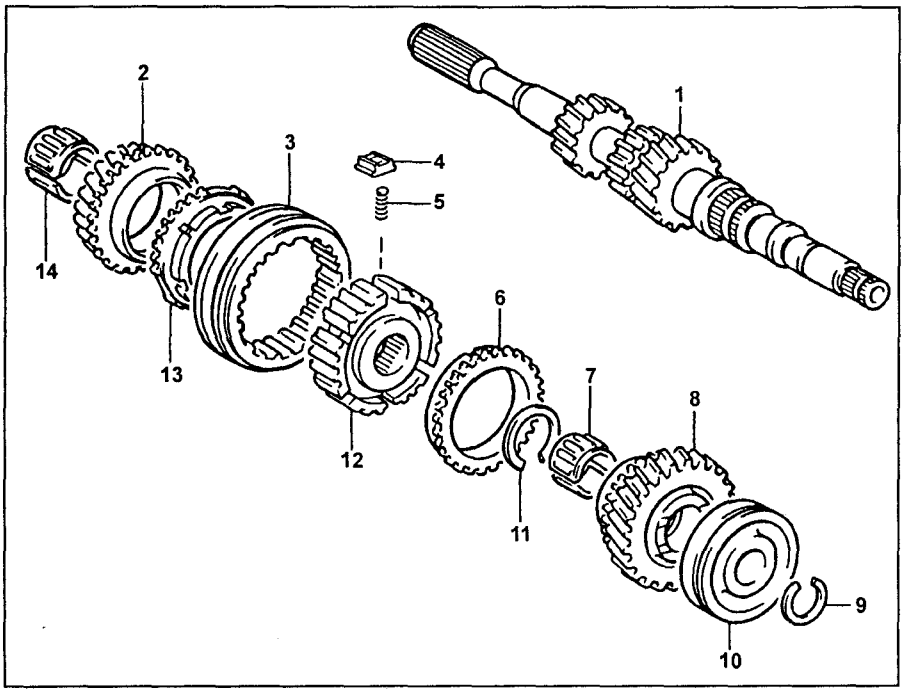

Primary shaft (C50, C56, C160). 1 - primary shaft, 2 - gear third gear, 3 - synchro clutch synchronizer No. 2, 4 - sukhari (blocking piece), 5 - spring, 6 - synchronizer ring, 7, 14 - needle bearing, 8 - fourth gear wheel, 9 - retaining ring, 10 - rear ball bearing, 11 - retaining ring, 12 - synchronizer hub No. 2, 13 - synchronizer ring.

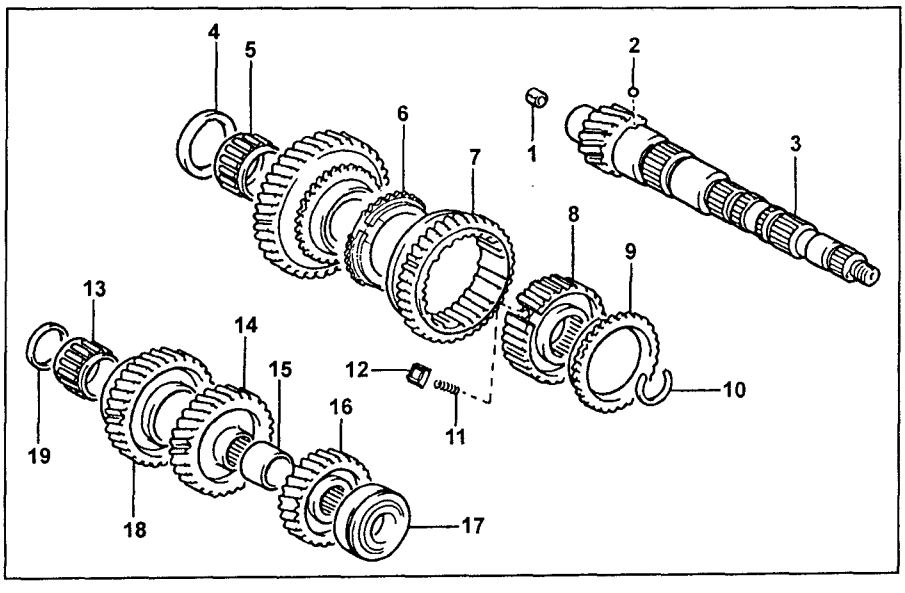

secondary shaft (C50, C56, C160). 1 - pin, 2 - ball, 3 - secondary spacer shaft, 4 - bushing, 5, 13 - needle bearing, 6, 9 - synchronizer ring, 7 - Synchronizer clutch No. 1, 8 - Synchronizer hub No. 1, 10 - circlip, 11 - spring-na, 12 - keeper, 14 driven gear of third gear, 15 spacer sleeve, 16 - driven gear of fourth gear, 17 - rear ball bearing, second gear wheel, 19 - spacer sleeve.

18 -

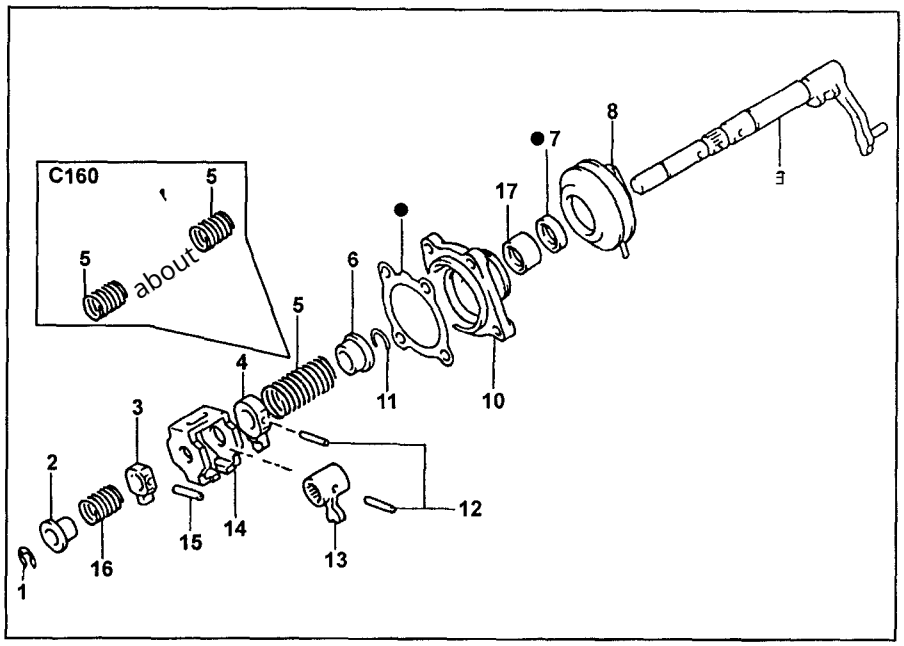

Shift lever shaft (C50, C56, C160). 1 retaining ring, 2 - spring seat, 3 - inner shift lever No. 2, 4 - inner-front shift lever, 5 - spring, 6 spring seat, 7 - oil seal, 8 - dust cover, 9 - selector lever rod gears, 10 gea - selector shaft cover rs, 11 circlip, 12 pin, 13 inner shifting lever s hift No. 1, 14 - inn - er lever sleeve, 15 - pi n, 16 - spring, 17 - bushing (C160).

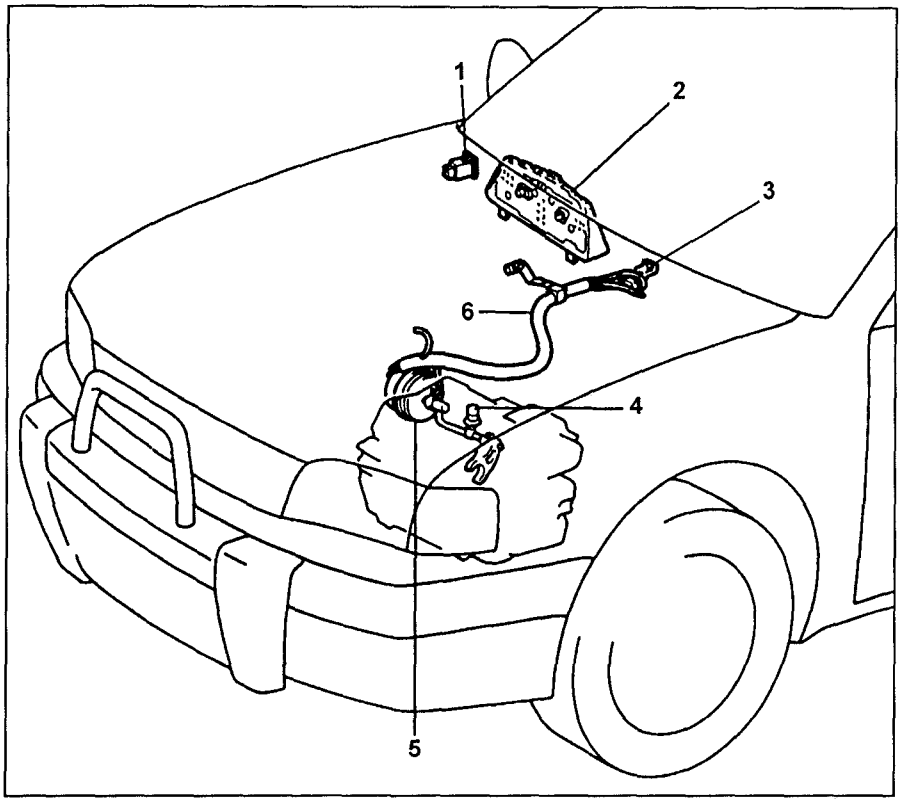

Interaxle differential lock system. 1 Differential lock system switch, 2 - differential lock system i ndicator, 3 - solenoid valves of the interaxle loc king system, 4 sensor- sensor- Differential Lock System Indicator Switch, 5 - vacuum actuator of the interaxle locking system, 6 - vacuum hoses.

Locking system

of the interaxle

differential

System inspection

1. Checking the operation of the interaxle differential locking system.

a) Using a lift, raise the vehicle so that al l four wheels can rotate. b) Engage the p arking brake and start the engine.

c) Set the differential lock system switch to position B "ON" (on).

d) Depress the clutch pedal and engag e second gear.

d) With the engine idling, smoothly release the clutch and check that the vehi- cle is mo ving

The engine stalled.

e) With the parking brake engaged and th e engine running, set the inter-axle differe ntial lock system switch to the "OFF" positi on.

g) Press the clutch pedal and engag e second gear. 3) With the e ngine idling, smoothly release the cl utch and check that the front wheels are turning. Note: this check must b e performed while the engine is idling.

2. Check the operation of the center dif ferential lock indicator. (a) Turn the ig nition on.

b) When setting the differential lock s ystem switch to the "OFF" (off) and " ON" (on) positions, make sure that th e differential lock indicator lights up

turns on and off accordingly.

Checking the operation of th e buzzer for the inter-axle differential lock

1. Start the engine. Switch the center differential lock switch to the "ON" po sition and make sure the reverse mov ement buzzer does not operate.

2. Swap the tubes (vacuum hose No. 1 and No. 2) from the electromagnetic valves No. 1 and No. 2 of the inter-axle differential lock control to the lock drive. Switch the inter-axle differential lock switch to the "OFF" position and ensure that the buzzer has sounded.

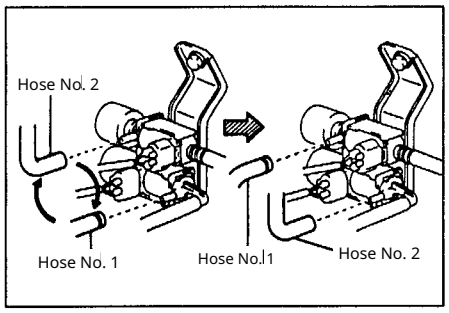

3. Return the tubes to their original position and make sure that the buzzer has stopped operating.

Note: the check is performed with the vehicle stopped. After checking the buzzer, inspect the solenoid valve tubes.

Inspection of components

1. Ensure that when the system switch is in the "LOCK" position the inter-axle differential LOCK circuit between the "SW" and "E" terminals is closed, and when the switch is in the "FREE" position the circuit is open.

Note: a panel illumination lamp is connected between the "ILL+" and "ILL-" terminals.

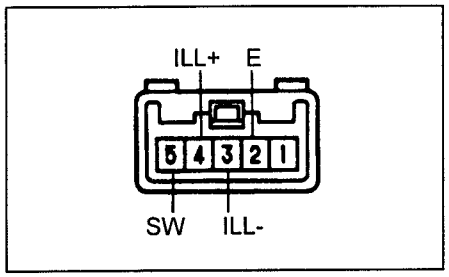

If the continuity does not match the table, check the lamp or replace the switch.

Checking the solenoid valves

1. Disconnect the connectors of the solenoid valves.

2. Check solenoid valve No. 1.

a) Apply battery voltage to the terminals of valve No. 1 and make sure that air flows between hoses "F" and "E2".

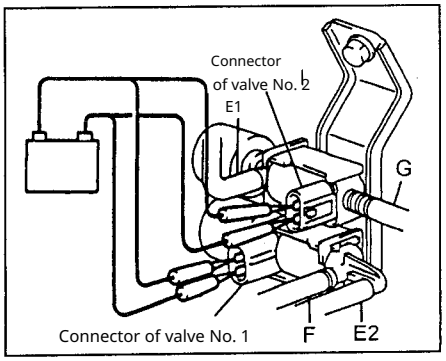

b) Disconnect the battery and make sure that air flows between the filter and hose "E2".

3. Check solenoid valve No. 2.

a) Apply battery voltage to the terminals of valve No. 2 and make sure that air flows between the filter and hose "E1".

6) Disconnect the battery and make sure that air flows between hoses "E1" and "G".

Inspection

vacuum actuator

1. Check the vacuum actuator of the center differential lock system

rentsiala.

a) Disconnect hoses No. 0, No. 2, and No. 3 from the solenoid valves. b) Insert a plug into hose No. 3. c) Create a vacuum of 500 mmHg in hose No. 0 and verify that the vacuum decreases by no more than 45 mmHg within 15 seconds.

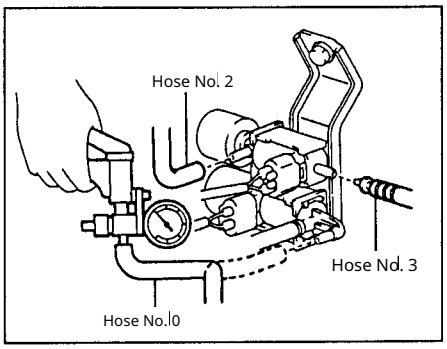

2. Check the engagement diaphragm of the center differential lock.

a) Disconnect hoses No. 1 and No. 2 from the solenoid valves.
b) Create a vacuum of 500 mmHg in hose No. 1 and ensure that the vacuum decreases by no more than 45 mmHg within 15 seconds.

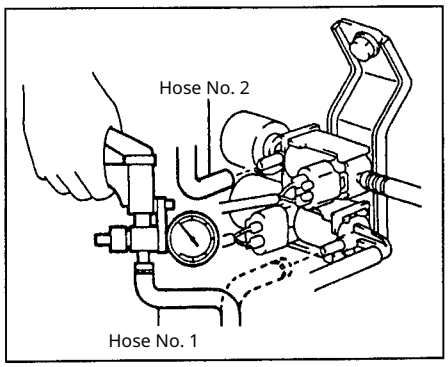

3. Check the lock disengagement diaphragm of the inter-axle differential.

a) Disconnect hoses No. 0, No. 1, No. 2, and No. 3 from the solenoid valves. b) Insert a plug into hose No. 3. c) Create a vacuum of 500 mmHg in hoses No. 0 and No. 2, and ensure that the vacuum decreases by no more than 45 mmHg within 15 seconds.

Attention: simultaneously create vacuum in hoses No. 0 and No. 2.

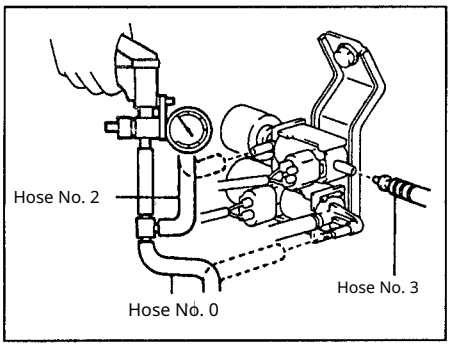

g) Install the hoses on the electrical-

Warning: make sure that all hoses are correctly installed and securely fastened to the solenoid valves.

magnetic valves

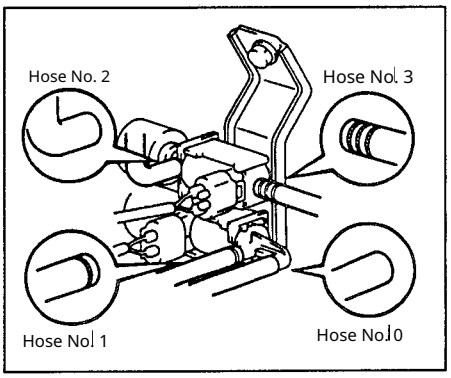

Gearshift lever Note:

- Do not kink end fittings the cables.
- Do not apply excessive force when removing and installing the cables.
- The bend radius of the shift and selector cables must not be less than 150 mm.

1. Inspection of the gear shift lever.

a) Remove the retaining ring, washer, shift lever and spring.

b) Tighten the mounting bolts of the ball lever seat holder. Tightening torque...

..... 5 N·m

c) Check that the shift lever moves smoothly without sticking or excessive play. If play is present, replace the ball seat of the shift lever.

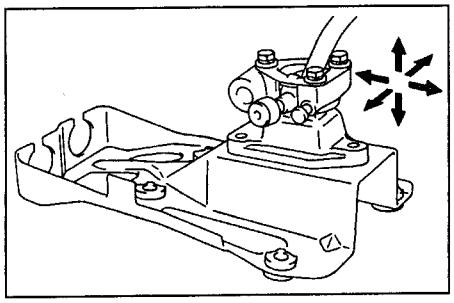

and install the shift selector lever.

3. Align the marks on the outer sheaths of the selector and shift cables with the slots in the holder bracket. Install the cables and secure them with the retainers.
Note: do not disassemble the shift lever. When installing the cables, align the marks.

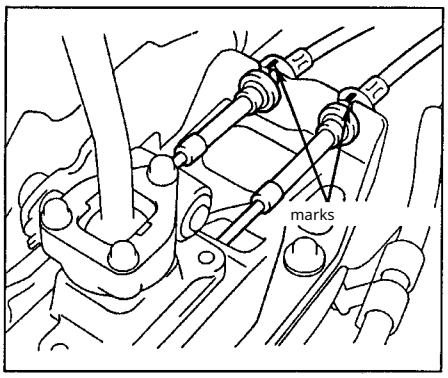

Front drive shaft seal replac ement

1. Remove the right and left engine protection covers.
2. Drain the transmission oil from the manual transmission case.
3. Remove the drive shafts (see the "Drive Shafts" section of the "Front Suspension" chapter).
4. Using a special tool, remove the left drive sh aft oil seal.

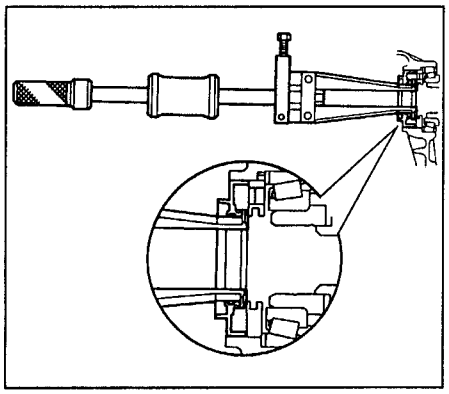

5. Using a screwdriver as shown in the illustr ation, remove the right drive shaft oil seal.

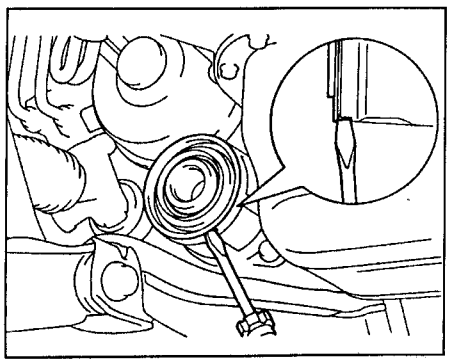

6. Using a suitable drift and a hammer, install th e left drive shaft oil seal as shown in the illustrat ion.

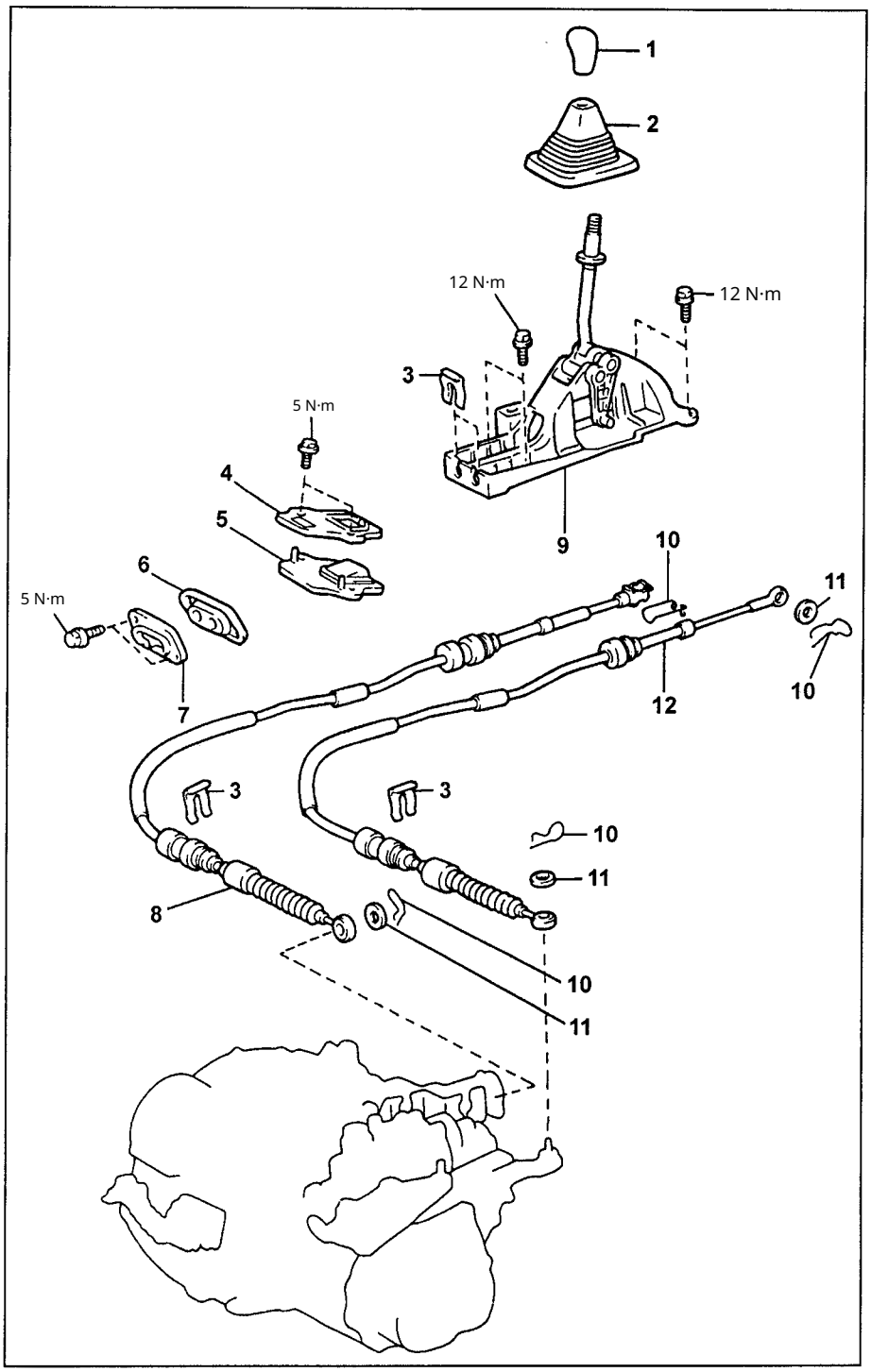

Gear shift lever. 1 - shift lever knob, 2 - cover, 3 - retainer, 4 - se al holder No. 1, 5 - seal No. 1, 6 - seal holder No. 2, 7 - seal No. 2, 8 - shift cable, 9 - co mplete shift lever assembly, 10 - cotter pin, 11 - washer, 12 - gear selector cable.

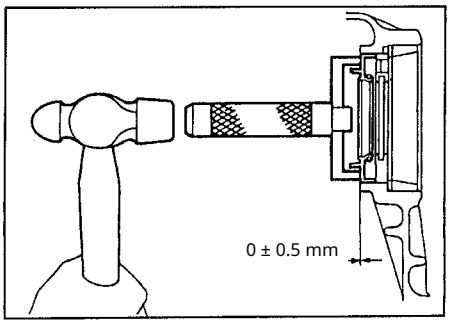

Models up to 1996.

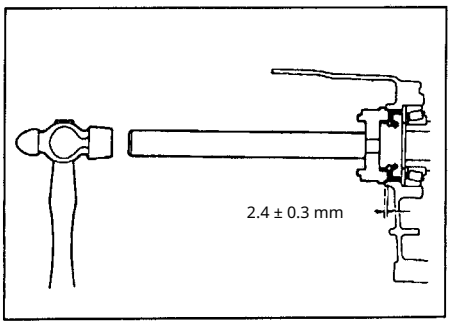

Models from 1996.

7. Using a suitable driver and a hammer, inst all the right drive shaft oil seal as shown in th e illustration.

Note: preliminarily apply a grease coatin g to the working edge of the seal.

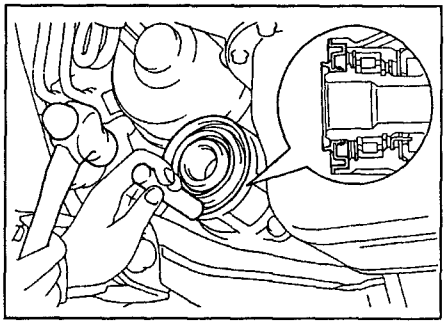

Models up to 1996.

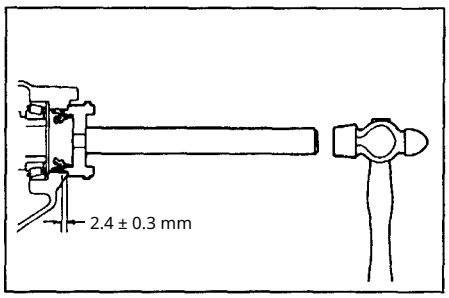

Models from 1996.

8. Install the drive shafts (see the section "Drive Shafts" chapter "Front Suspension").

9. Fill the transmission oil into the manual tra nsmission housing (see the section "Checkin g and replacing the oil in the manual transmi ssion and transfer case" of the chapter "Main tenance and general inspection and adjustm ent procedures").

10. Install the right and left leather- for engine protection.

11. Check the front mounting angles— the wheels.

Replacement of the tr ansfer case output s haft oil seal

1. Remove the right and left covers engine protection.

2. Drain the transmission oil from the g earbox housing.

3. Remove the propeller shaft (see the "Remo val" section of the "Propeller Shaft" chapter).

4. Using a special tool, remove the output shaft oil seal of the transfer case.

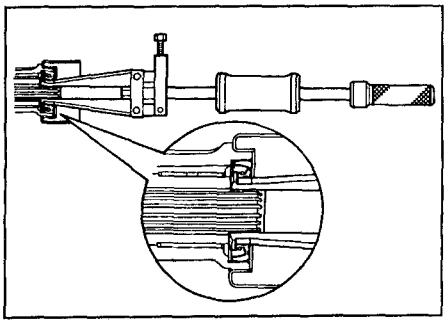

5. Using a suitable driver and a hammer , install the oil seal as shown in the illust ration. Press-in d epth seal.... ..... 1.5 ± 0.4 mm

Note: preliminarily apply a grease coating t o the working edge of the seal.

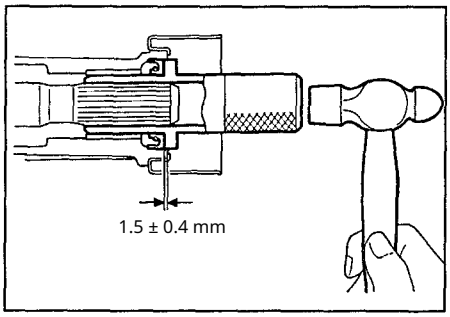

6. Install the front driveshaft (see the "Installation" section of the "Driveshaft" chapter · shaft").

7. Fill the transmission oil into the manual g earbox housing (see the section "Checking and replacing the oil in the manual gearbo x and transfer case" of the chapter "Mainte nance and general inspection and adjustme nt procedures").

8. Install the right and left engine protectio n covers.

Transmission

Note: For more detailed operating infor mation, see the "Operating Manual" cha pter. 4WD vehicles have a perma nent all-wheel drive, the so-called "Full-ti me 4WD", with a locking center different ial.

Manual transmission models are equipp ed with a forced inter-axle differential lo ck system.

The lock can be engaged in two ways depen ding on the equipment package:

1) Mechanical inter-axle differential loc k (DIFF LOCK). When the button on the instrument panel is pressed, the pneu matic actuator mounted on the transfe r case operates the differential, which t hen rigidly locks the inter-axle different ial.

This results in an equal distribution of torque to the front and rear axles, which significantly impr oves off-road capability.

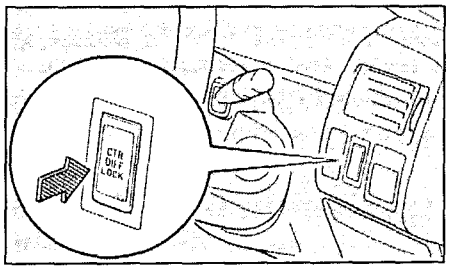

2) Automatic inter-axle differential loc k (viscous coupling). This system does not require driver intervention, but ve hicles equipped with this system have worse off-road capability compared to vehicles with the "C. DIF. LOCK" syste m.

This is due to the fact that the viscous c oupling does not provide 100% locking, and the coupling engages with a slight time delay.

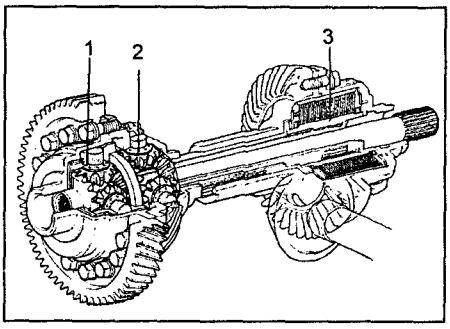

All-wheel drive diagram with a viscous c oupling. 1 — wheel differential, 2 — inte r-axle differential, 3 — viscous coupling.

Transfer case

Note: See the "Owner's Manual" chap ter for the procedure to change the o il in the transfer case.

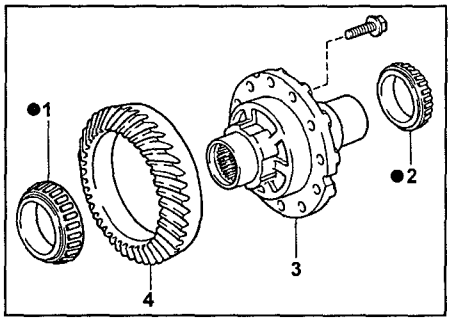

Drive gear of the transfer case main driv e (with mechanical inter-axle differential lock). 1, 2 - bearing, drive gear shaft of t he main drive, 4 drive gear of the main drive.

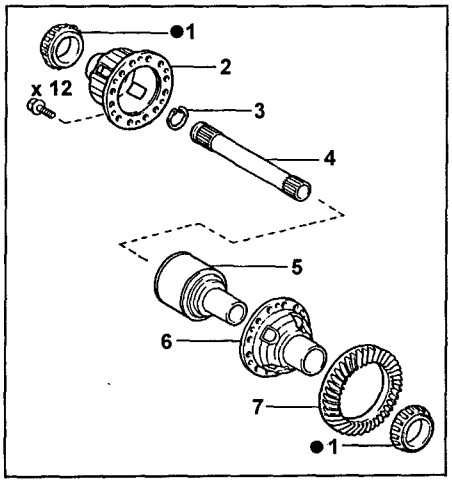

Drive gear of the transfer case main dri ve (with viscous coupling). 1 - bearing, 2 - right cup of the drive gear of the m ain drive, 3 - retaining ring, 4 - interme diate shaft of axle-side gears No. 2, 5 - viscous coupling assembly, 6 - left cup of the drive gear of the main drive, 7 - drive gear of the main drive.

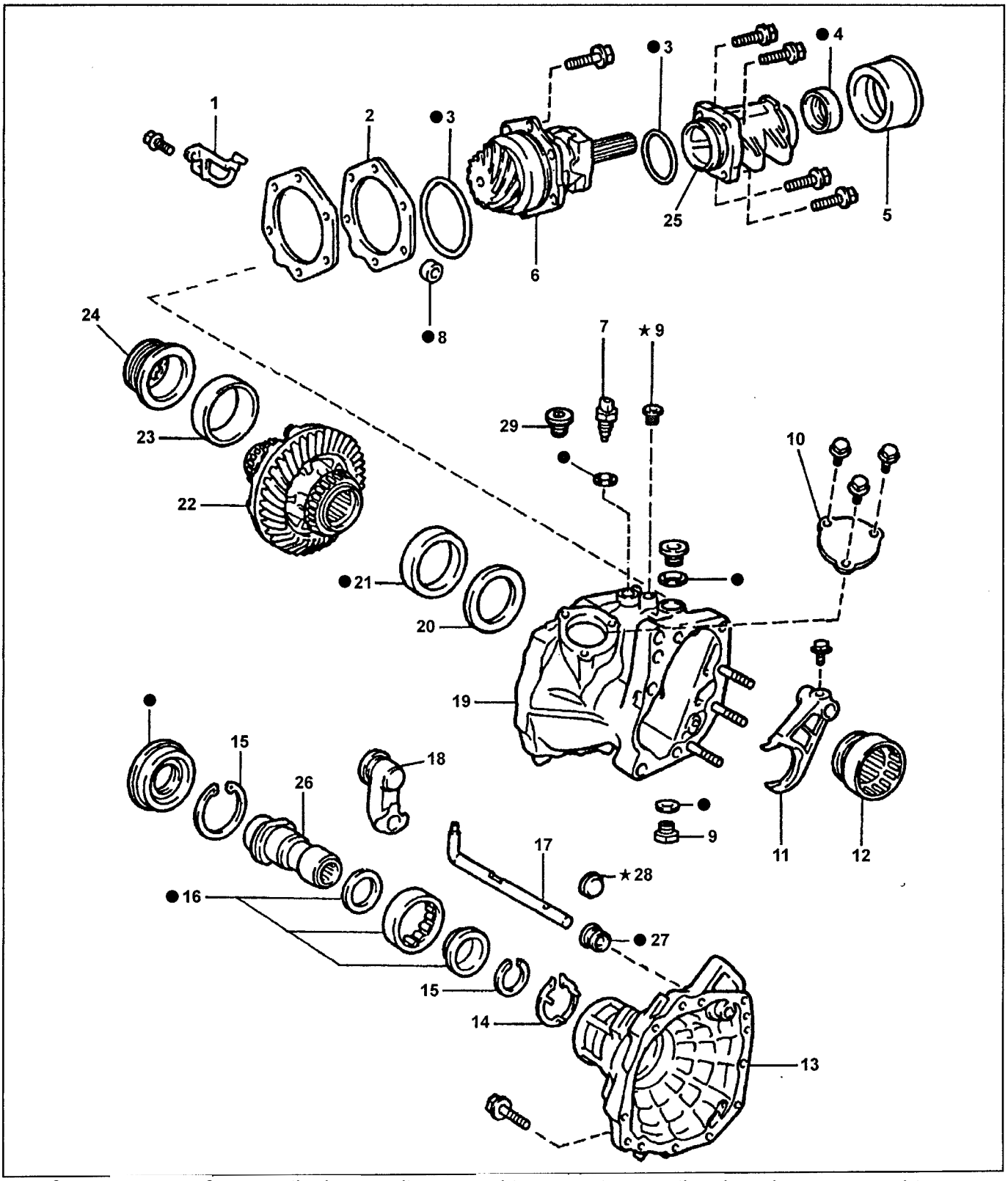

Transfer case. 1 - transfer case oil tube, 2 - adjustment shim, 3 - O-ring, 4 - oil seal, 5 - dust cover, 6 - driven gear bearing retainer, 7 - indicator sensor for the inter-axle differential lock system (with mechanical lock), 8 - bushing , 9 - plug, 10 - inspection cover of the transfer case, 11 - fork for engaging the inter-axle differential lock (with me chanical lock), 12 - inter-axle differential lock clutch (with mechanical lock), 13 - transfer case housing cover, 14 - l ocking plate of the adjustment nut, 15 - snap ring, 16 - support bearing of the intermediate shaft of the axle-side gears, 17 - rod of the fork for engaging the inter-axle differential lock (with mechanical lock), 18 - dust boot (with mechanical lock), 19 - transfer case housing, 20 - washer, 21 - outer bearing race, 22 - assembled shaft of the mai n drive gear (with mechanical lock), 23 - outer bearing race, 24 - adjustment nut, 25 - transfer case housing exten sion, 26 - intermediate shaft retainer of the axle-side gears, 27 - oil seal (with mechanicalblocks-\ locking), 28 - plu g (with viscous coupling), 29 - cap (with viscous coupling).

Automatic transmission

Note: For operation of the automatic transmission, fluid replacement, see the chapter "Maintenance and General Inspection and Adjustment Procedures".

General description

Automatic The A241H automatic transmissions consist of a torque converter with a lock-up clutch, a 4-speed planetary gearset, a transfer case, and a hydraulic control system with an electronic upshift control unit and an electronic differential-lock control unit. On A241H units fitted with the 7A-FE engine, the transmission control unit is electronic.

The A241E and A245E automatic transmissions consist of a torque converter with a lock-up clutch, a 4-speed planetary gearset, and an electronic transmission control system.

Torque converter

The torque converter consists of a pump (impeller) driven by the engine, a turbine wheel, a lock-up clutch, and a reactor which is connected to the transmission housing through a one-way clutch. Planetary gearset The planetary gearset contains three planetary stages, three lock-up clutches, four brakes, and three one-way clutches. Power from the engine is transmitted through the torque converter to the input shaft of the planetary gearset. Gear shifting is performed

by engaging specific combinations of control elements in pairs.

Shift planetary boxes

1. Forward clutch (C1) - connects the input shaft and the sun gear of the forward planetary gear set.

2. Direct drive clutch (C2) - connects the input shaft and the sun gears of the front and rear planetary gear sets.

3. The reduction planetary clutch (C3) - connects the sun gear and the carrier of the reduction planetary gear set.

4. Engine braking mode on the second gear (B1) stops the sun gears of the front and rear planetary rows.

5. Second gear brake (B2) - stops the outer ring of freewheel clutch No. 1 and thus prevents the sun gears of the front and rear planetary sets from rotating counterclockwise. 6. First gear and reverse brake (B3) - stops the carrier of the rear planetary set.

7. Brake of the reduction planetary gear set (B4) - stops the sun gear

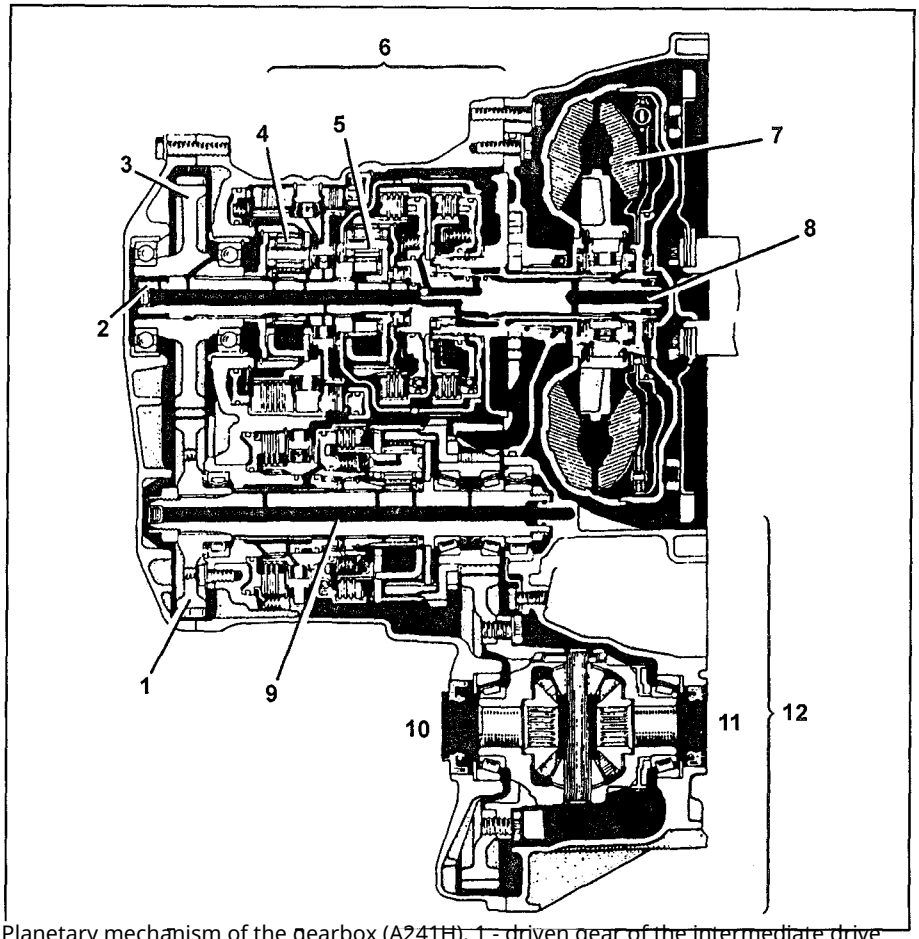

Planetary mechanism of the gearbox (A241H). 1 - driven gear of the intermediate drive of the intermediate transmission, 2 - intermediate shaft, 3 - driving gear of the intermediate non-geared row, 6 - planetary row, 4 - rear planetary mechanism, 7 - row of the torque converter, 5 - front non-geared row, 6 - planetary mechanism, 7 - torque converter, 8 - input shaft, 9 - shaft of the main drive gear, 10 - drive-shaft, 11 - drive shaft, 12 - differential.

- shaft of the main drive gear, 10 - drive-

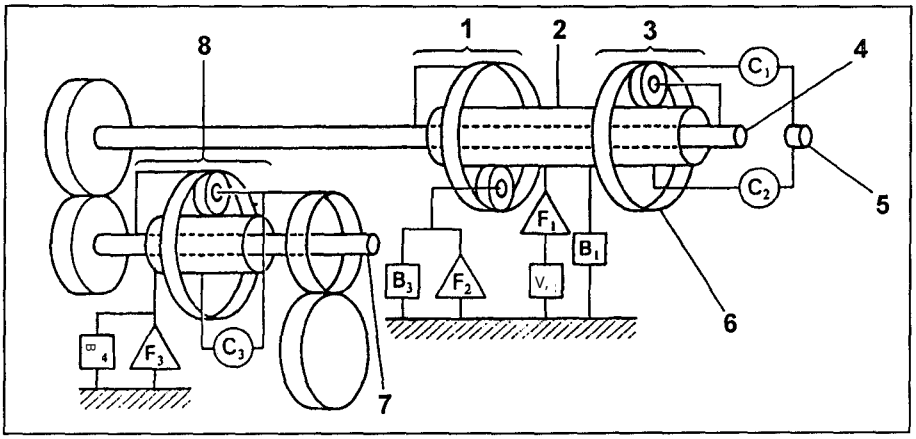

Automatic transmission diagram (A241H, A245E). 1 - rear planetary gear set, 2 - sun gears of the front and rear planetary sets, 3 - front planetary gear set, 4 - intermediate shaft, 5 - input shaft, 6 - epicycle (ring gear), 7 - drive gear shaft of the final drive, 8 - reduction (low) planetary gear set.

gear of the reduction (low) planetary set.

8. One-way clutch No. 1 (F1) - when the second-gear brake B2 is applied, it prevents counterclockwise rotation of the sun gears of the front and rear planetary sets.

9. One-way clutch No. 2 (F2) - prevents rotation of the carrier of the rear planetary set in the counterclockwise direction. 10. One-way clutch of the reduction planetary set (F3) - prevents clockwise rotation of the sun gear of the reduction planetary set.

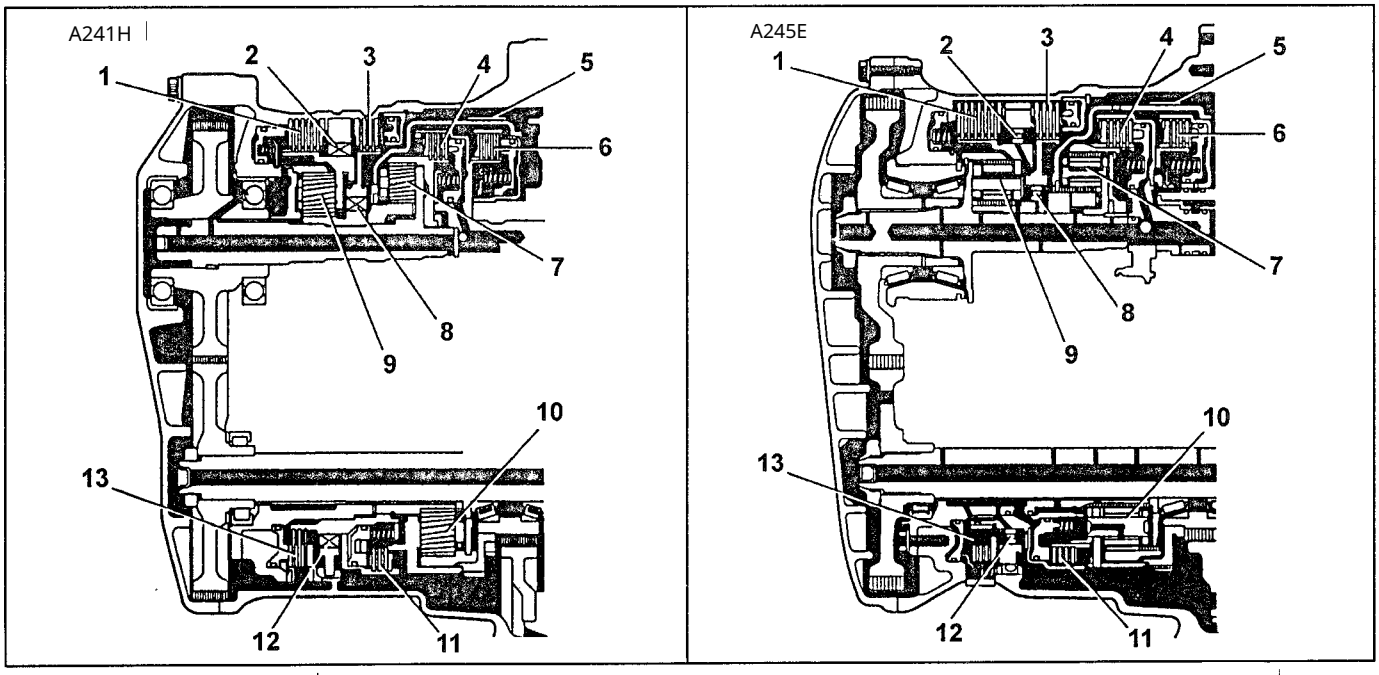

Planetary mechanism. 1 - first-gear and reverse brake (B3), 2 - one-way clutch No. 2 (F2), 3 - second-gear brake (B2), 4 - forward clutch (C1), 5 - engine braking mode brake in second gear (B1), 6 - direct drive clutch (C2), 7 - front planetary set, 8 - one-way clutch No. 1 (F1), 9 - rear planetary set, 10 - reduction (low) planetary set, 11 - reduction (overdrive) planetary clutch (C3), 12 - one-way clutch of the reduction (overdrive) planetary set No. 3 (F3), 13 - brake of the reduction (overdrive) planetary set (B4).

Hydraulic control system

The automatic transmission control system includes: a pump, a valve body, a solenoid valve, hydraulic accumulators, lock-up clutches and brakes. System pressure is generated by the oil pump; it is regulated by the control system depending on vehicle load and speed and provides operation of the torque converter, lock-up clutches and brakes. Shift valves control the fluid flows that go to the torque converter and the planetary gearset.

Preliminary inspections

Inspection and adjustment of the throttle valve control cable

1. Depress the accelerator pedal fully and ensure that the throttle valve is fully open. Note: if the throttle valve is not fully open, adjust the throttle control pedal linkage. 2. With the accelerator pedal fully depressed, loosen the adjusting nuts.

3. Adjust the cable so that the distance between the end of the sheath and the cable stop is within the specified limits.

Standard distance:
A241H (4A-FE) and models from 1996 (with the throttle valve fully closed) ..... 0–1 mm .....
A241H (7A-FE) (with the throttle valve fully open)...
..... 0-1 mm

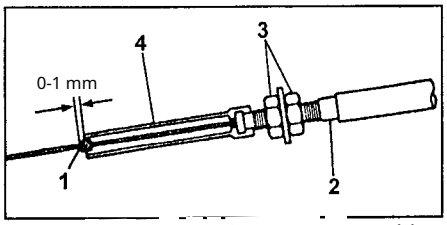

A241N (4A-FE). 1 - retainer, 2 - outer cable, 3 - adjustment nuts, 4 - flexible sleeve.

- adjustment nuts,

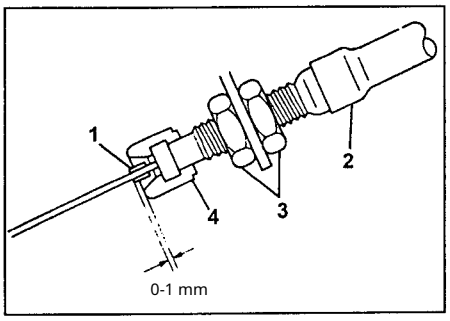

A241H (7A-FE), A245E. 1 - retainer, 2 - outer cable, 3 - adjustment nuts, 4 - sleeve.

4. Tighten the adjustment nuts and recheck.
Tightening torque ...
..... 15 N·m

Checking and adjusting the automatic transmission control linkage

1. When shifting the selector from position "N" to other positions, check that the selector moves smoothly and the indicator correctly shows the selected position. If the indicator does not correctly show the selected position, adjustment is required.

2. Loosen the nut on the automatic transmission control linkage.

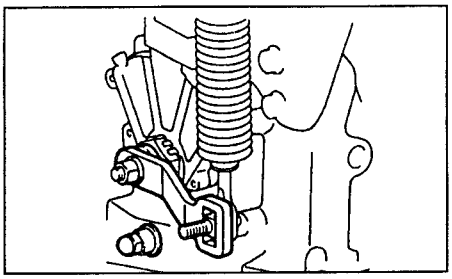

2. Push the starter interlock switch lever fully downward. 3. Return the starter interlock switch lever two detents to the "N" position.

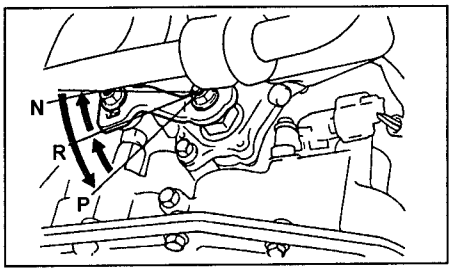

4. Set the selector to position "N". 5. While pressing the lever toward the "R" position, tighten the control linkage nut. Tightening torque.... 12 N·m
.....

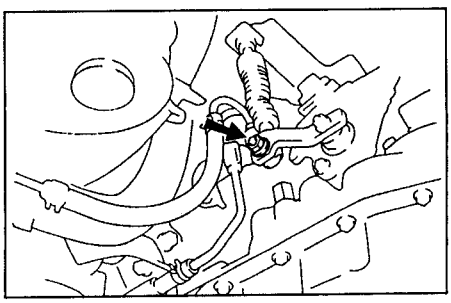

Checking and adjusting the engine start-inhibit switch

1. Make sure that the engine can only be started when the selector is in the "N" or "P" position.
2. If the engine can be started in other positions, adjust the engine start-inhibit switch.

a) Loosen the bolts of the start-inhibit switch in the neutral position and set the selector to "N". b) Align the groove with the neutral position reference line.

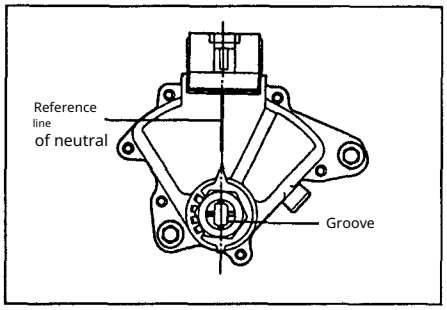

A241H.

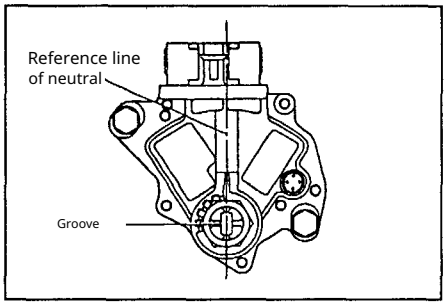

A245E.

c) While holding the parts in this position, tighten the bolts.

Tightening torque.. .....5,4 H·м

Checking the idle speed (range N)

Check the idle speed.

Idle speed:

4A-FE ..... 650 - 750 rpm
4A-GE..... 800 - 900 rpm
7A-FE ..... 650-750 rpm

Automatic Transmission Diagnostics

Note:

- malfunctions occurring in the transmission may be related to the engine, to the control system, or to the gearbox itself. Before re-determine the inspec-

chalom the area of their occurrence.

Start troubleshooting with the simplest procedures and continue in order of increasing complexity. 1. Check the tire pressure and perform other preliminary inspections. 2. Check for the presence of fault codes.

3. Check the gear shifting. If the shifting complies with the standard, check the electrical part of the transmission control system. 4. Perform the following inspections:

a) Check the engine and transmission with the vehicle fully braked.

6) Road tests. Make sure make sure that the malfunction relates to the automatic transmission itself. Possible sources of noise or vibration may include the compressor, engine, driveshaft, etc.

c) Hydraulic tests. Measure the pressure in the lines and check the fluid supply lines. d) Checking engagement timing of the gear. Check wear of transmission components (lock-up clutches, brakes, etc.).

System self-diagnostics

General information

1. The self-diagnostic function is built i B nto the transmission electronic control unit. Using the overdrive off indicator the system can warn the driver of a detected transmission malfunction. The fault code

can be determined using the same indicator.

Warning: warning signals appearing and reading fault codes is possible only when the overdrive switch is in the "ON" position. If the switch is in the "OFF" position, the indicator lamp will glow steadily without flashing.

a) Fault codes can be read by the number of flashes of the overdrive indicator; to do this, short the "Te1" and "E1" terminals of the diagnostic connector.

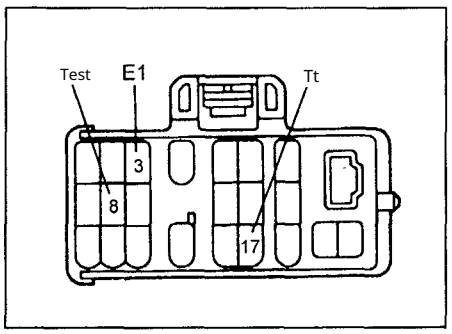

c) The diagnostic system does not detect a failure of the throttle position sensor and the stop lamp switch; it can be checked by measuring the voltage— their

voltage at the "Tt" diagnostic connector pin.

2. The fault code is stored in the control unit's memory even after the engine is turned off. Clearing the control unit's memory (resetting the codes after repair) is performed either by turning off the ignition and disconnecting the "EFI" fuse, or by disconnecting the connector of the automatic transmission control unit and the en

gatelom.

Attention: low battery voltage may cause a malfunction during diagnostics. Therefore, check the battery before starting diagnostics.

Checking the overdrive off indicator

1. Turn on the ignition.
2. The indicator should light when the upshift switch is in the "OFF" position.
3. Move the upshift switch to the "ON" position: the indicator should go out. If the indicator flashes, this is a sign of a malfunction in the electrical part of the control system.

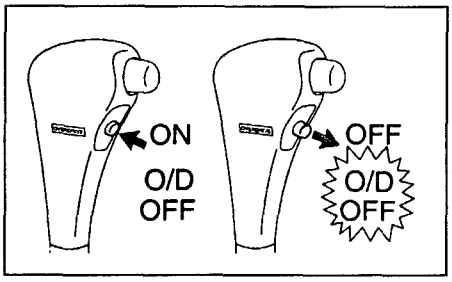

Reading fault codes

1. Turn the ignition on and set the upshift switch to the "ON" position. Warning: do not start the engine. 2. Short the "Te1" and "E1" terminals of the diagnostic connector. 3. Read and determine the fault code by the number of indicator flashes.

a) If there are two flashes per second, the system is operating normally.

normally.

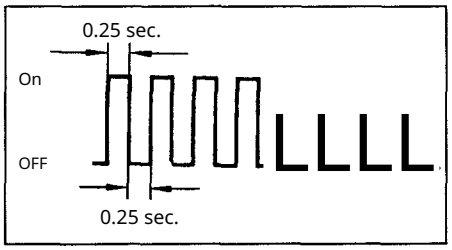

b) If one flash occurs per second, there is a malfunction in the system. The code consists of two digits; the first digit is determined by the initial series of flashes, followed by a 1.5-second pause and a second series of flashes that corresponds to the second digit of the code. If there are two or more fault codes, there will be a 2.5-second pause between them.

Attention: if multiple fault codes are present, the smallest code will always be displayed first and then the remaining codes in ascending order.

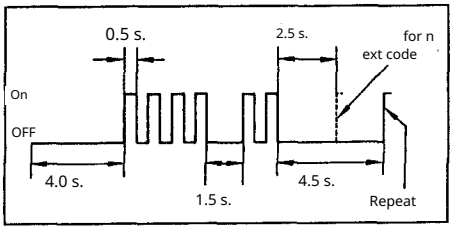

4. Disconnect terminals "TE1" and "E1".

Table. Fault codes.

Code	Malfunction	Diagnostic conditions	Possible cause malfunction
42	Vehicle speed sensor - open circuit or short circuit	1. Shift selector in any position except "P" or "N". Within 30 s after placing the selector, the crankshaft rotation speed exceeds the maximum value 2. No SP1 signal. 3. More than 1 s. 4A-FE, 4A-GE (from 1996 2.) 1. Shift selector in any position except "P" or "N". Within 30 s after placing the selector, the throttle opening is over 35% (4A-GE - 15%) and the crankshaft rotation speed is over 2900 rpm. 2. No signal from the speed sensor. 3. More than 1 s.	• Vehicle speed sensor - Instrument cluster - Open circuit or short circuit in the wiring between the vehicle speed sensor and the instrument cluster - Open circuit or short circuit in the wiring between the vehicle speed sensor (instrument cluster) and the engine control unit - Engine control unit teleme
62	Electromagnetic valve No.1 - open circuit or short-short circuit	1. Ignition switch in the ON position. 2. Open circuit or short circuit in open circuits of solenoid valve No.1. 3. The code is stored the first time and then the indicator flashes 8 times.	- Solenoid valve No. 1 - Open circuit or short circuit in the circuit between the solenoid valve and the engine control unit (ECU) teleme - Engine control unit (ECU) teleme
63	Solenoid valve No.2 - open circuit or short-short circuit	1. Ignition switch in the ON position. 2. Open circuit or short circuit in the circuit of solenoid valve No.2. 3. The code is stored the first time and then the indicator flashes 8 times.	- Solenoid valve No. 2 - Open circuit or short circuit in the circuit between the solenoid valve and the engine control unit (ECU) teleme - Engine control unit (ECU) teleme
64	Solenoid valve management k torque converter clutch - open circuit or short circuit	1. Ignition switch in the ON position. loc 2. Open circuit or short circuit in the circuit of the to rque converter lock-up solenoid v alve. 3. The code is stored once.	- Lock-up solenoid valve of the torque converter - Open circuit or short circuit in the circuit between the solenoid valve and the engine control unit (ECU) teleme - Engine control unit (ECU) teleme

Note: Codes 62, 63, and 64 indicate a fault in the electrical part of the solenoid valves. Mechanical faults, for example valv e sticking, are not detected by the self-diagnostic system.

Clearing fault codes

1. After completing repairs, clear the tra nsmission control unit (TCU) and engine control unit (ECU) memory of the fault c odes stored there. To do this, remove th e "EFI" fuse (15 A) for 10 seconds or long er depending on the ambient temperatu re (the lower the temperature, the longe r) while the ignition is off.
on ignition.

Attention:

- To clear fault codes disconnect the negative terminal of the battery for a while. This will erase the contents of the control units' memory for other systems.

of other systems' control units.

- To clear fault codes disconnect the connect or of the automatic transmission control uni t and the engine control unit.

- If a fault code was not cleared, it will remain stored in the control unit's memory and appear during subsequent diagnostics.

Diagnostic.

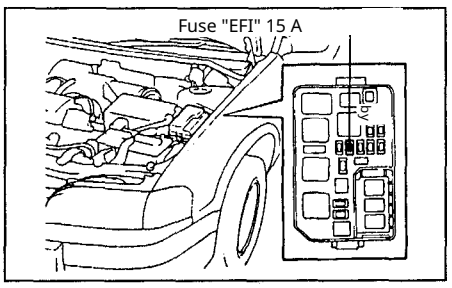

2. After clearing the codes, perform a check — the upshift indicator flas hing should correspond to the nor mal condition of the trans mission. Shift check

Note: This check allows you to determine whether the cause of the malfunction lies in the electrical part or the mechanical p art of the transmission. 1. Disconnect the connector of the solenoi d valve assembly.

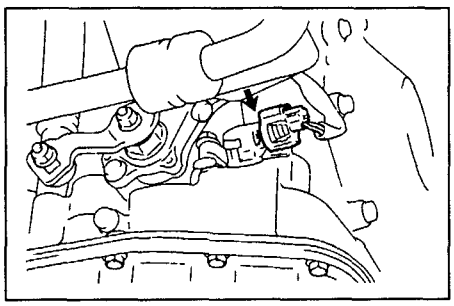

A241H.

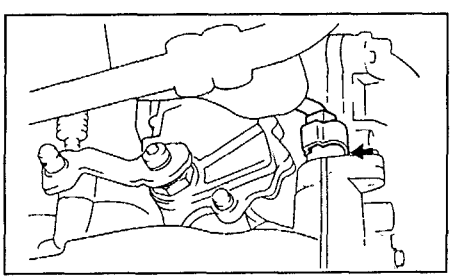

A245E.

2. Gear shifting must occur in accordance with the table "Transmission operating modes in normal operation of the solenoid valves (solenoids) and in case of failure of one or two of them".
Note: If it is difficult to determine the engaged gear in the "L", "2", and "D" ranges, perform the following test:

- While driving, move the selector to the "L", "2", and "D" positions. Gear changes should correspond to the lever position. If deviations occur during the shifting process, the fault is located in the transmission itself.

3. Reconnect the connector of the solenoid valve assembly.
4. Clear the fault codes.

Checking the voltage at the "TT" terminal

1. Check the signal from the throttle position sensor.
a) Turn the ignition on. Do not start the engine.
b) Connect a voltmeter to the "TT" and "E1" diagnostic connector terminals.

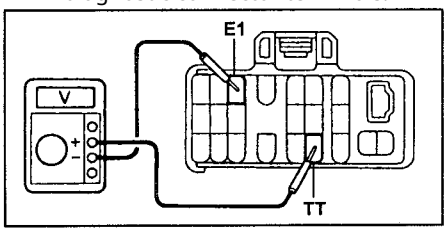

Note: use a voltmeter with an internal resistance of at least 10 kΩ/V.
voltmeter with an internal resistance of at least 10 kΩ/V.
c) While smoothly pressing the accelerator pedal, check the change in voltage. If the voltage does not change as shown in the illustration, the sensor or its circuit is faulty.

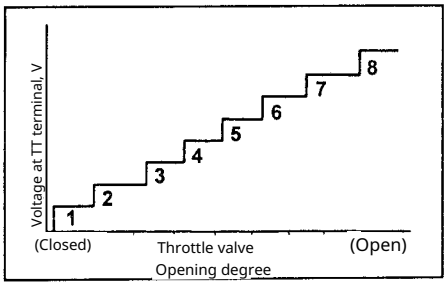

2. Checking the brake light switch circuit signals.
a) Press the accelerator pedal fully to the floor. The voltage at the "TT" contact should be the specified value
value.
Rated voltage ..... no more than 0.5 V
6) Press the brake pedal and check the voltage at the "TT" terminal.
Voltage:
brake pedal depressed ..... 0.5 V.
brake pedal released... ..... 7.6–8.7 V
c) If there is a deviation from the specified voltages, there is a fault in the stop-light switch circuit.

Table. Transmission operating modes in case of normal operation of the electromagnetic valves (solenoids) and failure of one or two of them. Normal Solenoid No. 1 Solenoid No. 2 Damaged damaged damaged both solenoids Selector position | Solenoid shift No.1 No.2 gear No.1 No.2 gear No.1 No.2 gear No.1 No.2 gear

D	ON	OFF	1	X	OFF →ON	3	ON	X	1	X	X	4
	ON	ON	2	X	ON	3	ON→ OFF	X	4	X	X	4
	OFF	ON	3	X	ON	3	OFF	X	4	X	X	4
	OFF	OFF	4	X	OFF	4	OFF	X	4	X	X	4
2	ON	OFF	1	X	OFF →ON	3	ON	X	1	X	X	3
	ON	ON	2	X	ON	3	ON → OFF	X	3	X	X	3
	OFF	ON	3	X	ON	3	OFF	X	3	X	X	3
L	ON	OFF	1	X	OFF	1	ON	X	1	X	X	1
	ON	ON	2	X	ON	2	ON	X	1	X	X	1

Note: Marks "X" indicate a malfunction.

3. Checking upshift moments.

a) Warm up the engine to a coolant temperature of 80°C. b) Set the upshift switch to the "ON" position. c) Place the selector in the "D" position.

d) During road tests (speed about 10 km/h), check the voltage change at the "TT" terminal during upshifts.

no more than 0.5 V	First gear
1.7–2.4 V	Second gear
2.7–3.4 V	Second gear with torque converter lockup
3.7–4.4 V	Third gear
Third gear with tor- que converter lockup 4.7–5.7 V	
5.7–6.7 V	Upshift gear
Upshift gear with torque converter lockup 6.7–7.7 V	

Note: The shift to the next gear can be identified by a slight jolt or a change in engine speed. e) If the voltage at the "TT" terminal does not correspond to the specified values, check the "TT" terminal circuit.

Inspection of mechanical gearbox systems

Stall test on a fully braked vehicle (stall test)

This test checks the operability of the transmission and the engine by measuring the rotational speed under maximum load in the "D" and "R" ranges.

Note:
- The test should be carried out at the normal operating temperature of the working fluid (50 - 80°C).
- The duration of each test should not exceed five seconds. 1. Measuring the engine speed:

a) Chock all wheels. b) Connect the tachometer. c) Engage the parking brake. d) Depress the brake pedal fully.

e) Start the engine.
f) Move the selector to "D". Press the accelerator pedal fully. Quickly read the tachometer and compare the readings with the specified values.

Engine speed with the vehicle fully braked:

A241H
4A-FE..... 2250 - 2550 rpm
7A-FE..... 2200 - 2500 rpm
A245E (4A-FE)..... 2250-2550 rpm
4A-GE (A245E, A246E)
..... 2200 - 2500 rpm Attention: if the wheels begin to turn before the engine speed reaches the required value for this check, release the accelerator pedal and stop the test.

g) Repeat the test with the selector lever in the "R" range.
2. Analysis of test results. a) If the engine speed is the same for both cases but lower than required, either the engine is not developing full power or the freewheel clutch of the torque converter is faulty.

b) If the engine speed in the "D" range is higher than required, then:
- too low pressure in the main line,
- There is slipping in the forward-drive clutch,
- the one-way clutch No. 2 is defective,
- the freewheel clutch of the reduction planetary gearset is defective.

c) If the rotational speed in the "R" range is higher than required:
- too low pressure in the main line,
- slipping in the reverse clutch, slipping in the first gear band and the reverse gear band,
- the freewheel clutch of the reduction planetary gearset is defective. g) If the rotational speed is higher than required in both ranges, then:
- too low pressure in the main line,
- the transmission fluid level does not meet the required value,
- the freewheel clutch of the reduction planetary gearset is defective.

Checking the timing engagement of gear

If, with the engine idling, you move the selector to the "D" or "R" position, there will be a certain delay before the gear engages. The length of this delay can be used to assess the condition of the forward clutch, reverse clutch, first-gear brake and reverse gear, and the freewheel clutch of the reduction planetary set. Note:

- perform the check at the normal operating temperature of the working fluid (50–80°C).
- perform three checks, then determine the average engagement delay time for the first gear.
- there must be at least one minute between checks.

1. Measure the gear engagement time:

a) Apply the parking brake. b) Start the engine and check the idle speed with the selector in the "N" position.

c) Move the selector from "N" to "D" and measure the time until a shift/jolt indicating gear engagement is felt. Delay time ..... not more than 1.2 s

d) Move the selector from "N" to "R" and measure the time until a shift/jolt indicating gear engagement is felt.

Delay time ..... not more than 1.5 s

2. Analysis of the inspection results.

a) If the "N→D" shift time is greater than required:
- too low pressure in the main line,
- wear of the forward clutch, defective one-way clutch No. 2 or one-way clutch of the reduction planetary gear. b) If the shifting time "N→R" is longer than required:
- too low pressure in the main line,
- wear of the reverse gear clutch, Wear of the first gear and reverse gear.

Hydraulic test

Pressure check in the main line

1. Preparation:

a) Warm up the transmission fluid to operating temperature (50–80°C).

b) Unscrew the service plug from the transmission case and connect a pressure gauge in its place. Attention: Always perform the pressure check with two people: one person must monitor the wheels while the second performs the check.

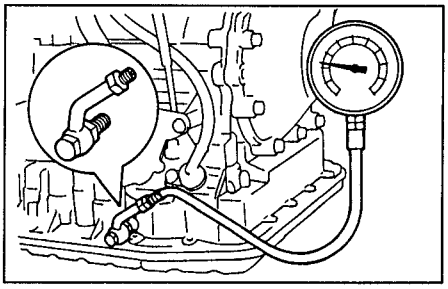

A241H.

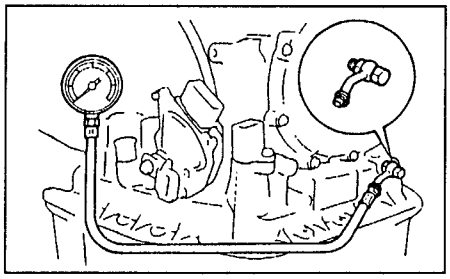

A245E, A246E.

2. Measure the pressure in the main line.

a) Immobilize the vehicle's wheels with chocks and engage the parking brake.

b) Start the engine and check the idle speed. c) Press the brake pedal and shift the selector to "D". Measure the pressure at idle speed.

d) Depress the accelerator pedal fully. Quickly measure the pressure in the line when engine speed reaches its maximum value. Compare the measured pressures with the values given in the table (pressure is shown in kPa). Attention: Release the accelerator pedal and stop the test if the rear wheels begin to rotate before engine speed reaches its maximum value.

Selector position	Idle speed	Maximum rotation speed
A241H (4A-FE), kPa		
D	373 - 420	903 - 1050
R	647 - 795	1638 - 1900
A241H (7A-FE), kPa		
D	373 - 420	834 - 980
R	647 - 795	1420 - 1755
A245E (4A-FE), kPa		
D	373 - 440	980 - 1135
R	598 - 716	1393 - 1716
4A-GE (A245E, A246E), kPa		
D	373–440	893–1050
R	600–715	1285–1608

d) Repeat the check with the selector lever in the "R" range.

e) If the pressure is not equal to the specified value, check the adjustment of the automatic transmission control cable and repeat the test. 3. Analysis of the inspection results: a) If the pressure is above the specified values in all ranges, then:
- steering cable not adjusted with the throttle valve,
- the throttle valve is defective, the
- pressure regulator is defective.

b) If the pressure in all ranges is below the specified values, then:
- steering cable not adjusted with the throttle valve,
- the throttle valve is defective,
- the pressure regulator is defective,
- the automatic transmission pump is defective,
- the lock-up clutch of the reduction planetary set is defective. c) If the pressure in range "D" is below the specified values, then:
- there is a working fluid leak in the control circuit for range "D",
- the forward clutch is defective.

d) If the pressure in range "R" is below the specified values, then:
- there is an oil leak in the control circuit for range "R",
- the reverse clutch is defective,
- the first gear brake is defective reverse gear engagement and transmission. Checking the speed governor pressure (A241N (4A-FE))

1. Warm up the automatic transmission (AT) to operating temperature (50–80°C).

2. Unscrew the plug of the governor speed channel and install a pressure gauge in its place. Note:
- check the throttle-cable adjustment - check the tire pressure.

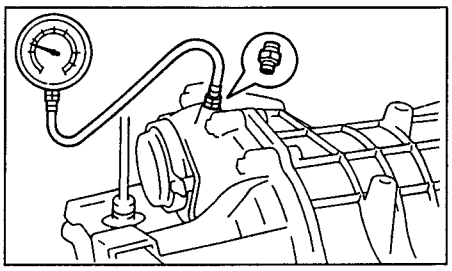

3. Apply the parking brake.
4. Start the engine.
5. Move the selector to the "D" position and measure the governor pressure at the speeds specified in the table.

Vehicle speed, km/h	Pressure скорост growth regu- Fan pressure, kPa
30	100 - 176
60	197 - 274
90	363 - 440

Analysis of results.

If the obtained values do not match those given in the table, then: The pressure in the main line does not correspond to the nominal value,
- leakage of working fluid in the governor circuit of the speed regulator,
- the speed regulator is malfunctioning.

Road test Note: Be
fore starting the inspection, warm th
e ATF (automatic transmission fluid)
to a temperature of 50–80
°C. Check in range "D" Mov
e the selector to position "D" and de
press the accelerator pedal fully. Ch
eck for 1→2, 2→3 and 3→4 shifts an
d verify that the shift timing corresp
onds to the values given in the "Shift
timing" table. Result analysis.

a) No shift from 1 to 2:
- the speed regulator is faulty,
- the 1→2 shift valve is sticking.
a) No 2→3 shift:
- the 2→3 shift valve is sticking. b) No 3
→4 shift (throttle opening less than 86%)
:

- the 3-4 shift valve is sticking, there is
- a fault in the solenoid valve or its ci
rcuit.
g) The shift moments do not correspond to
those indicated:
- steering cable not adjusted
with the throttle valve,
- the throttle valve is malfunctioning, t
he 1-2, 2-3, 3-4 shift valves, etc.

2. Similarly, check for the absence of jolti
ng and slipping of the friction control ele
ments during shifts 1-2, 2-3, and 3-4. An
alyze the results. If jolting i
s felt during shifts—

if there are strong jolts, then:
- pressure in the main line
too high,
- the hydraulic accumulator is faulty,
- a defective check valve.

3. While driving in third or fourth ge
ar in the "D" range, check for any un
usual noise or vibration. Caution: be
careful, as noise a
nd vibration may be caused by imbal
ance of the driveshaft, the differenti
al, the torque converter, etc. 4. Chec
k for the presence of a kick-down (fo
rced downshift), 2→1, 3
→2, 4→3, and verify that the shift ti
ming/moments correspond to the v
alues given in the "Shift Timing" tabl
e. Analysis of results.

If the shift-down speed limits do not match the
specified values, then:
- Incorrect adjustment of the throttle control
cable faulty throttle valve, switching valve
- s 1-2, 2-3 and 3-4, etc.

5. Check for the absence of jerking an
d slipping when forcibly downshifting.

6. While driving in 3rd gear within t
he "D" range at 60 km/h, release th
e accelerator pedal and move the s
elector to the "L" position. Compar
e the speed at which the 2→1 dow
nshift occurred with the value sho
wn in the "Shift Points" table. C
hecking the torque converter lock-
up operation 1. When dr
iving in an upshifted gear at a stea
dy speed, the lock-up should enga
ge at approximately 70 km/h.

2. Lightly press the accelerator pedal:
the engine speed should not change a
bruptly. If a sudden change occurs, it
means the lock-up is absent.

Range check "2"
Move the selector to position
"2", then press the accelerator pedal
fully to the floor.
1. While driving in the second gear of
range "2", release the accelerator ped
al and check the engine braking effect
. If
If there is no engine braking, then no-.
The braking system is functioning, p
roviding engine braking mode in se
cond gear.
2. Check the noise level and vibration during
upshifting and downshifting.

Check in range "L"
1. When driving in the "L" range, no up
shifts should occur — the vehicle must
operate only in first gear. ranslation>
<translation>2. Upon load reducti
on (releasing the accelerator pedal), e
ngine braking should occur. If there is
no engine braking, the first-gear brake
and the reverse-gear brake are defect
ive. 3. Check for noise and vibration du
ring vehicle acceleratio
n and deceleration. Check in range "R"
Shift the selector to "R" and depress t
he accelerator pedal fully. Ch
eck that the friction control elements
do not slip. Check in range "P" Place th
e vehicle on an incline (at least 5°), shif
t the selector to "P" and release the pa
rking brake. The output lock
mechanism must securely

to hold
to secure the vehicle.

Table. Shift torque specifications. A241N (4A-FE).

Range	D								L
Degree of open-throttle throttles	100%		0%			100%			0%
Shifts	1→2	2→3	3→4	A	B	4-3	3→2	2→1	2→1
Vehicle speed-mobile, km/h	45 - 60	90 - 105 (83 - 100)	19 - 32	66 - 76 (61 - 73)	62 - 71 (57 - 68)	*	86 - 103 (78 - 97)	36 - 47 (31 - 42)	46 - 57 (41 - 54)

* - Shifting is possible at maximum speed.
A - Torque converter lock ON.
B - Torque converter lock OFF.
( ): models from 1997.

A241H (7A-FE).

Position selector	Operating program Transmission	Vehicle speed (throttle fully open [closed]), km/h							
		1→2	2→3	3→4	[3-4] [43]		4→3	3→2	2→1
D	NORM, POWER	50 - 57	92 - 100	175 - 188	33-38 13-18		169 - 182	85 - 93	41 - 46
	MANUAL	44 - 51	83 - 90	114 - 126	29-34 12-17		106 - 117	75 - 82	36 - 42
2	NORM or POWER	49 - 56	-	-	-	-	-	-	41 - 46
L	NORM, PWR or MANUAL	-	-	-	-	-	-	-	47 - 53

Transmission operation program	Vehicle speed (throttle valve open 3%), km/h			
	Torque converter lockup engaged		Torque converter lockup turned off	
	3* (O/D OFF)	4	3* (O/D OFF)	4
NORM	67 - 74	57 - 63	56 - 62	53 - 59
POWER	66 - 72	57 - 63	56 - 62	53 - 59
MANUAL	53 - 59	52 - 58	50 - 57	50 - 56

*: models from 1997

Table. Shift torque/moments.

A245E (4A-FE).

Position selector	Operating program Transmission	Vehicle speed (throttle fully open [closed]), km/h							
		1→2	2→3	3→4	[3→4]	[4→3]	4→3	3→2	2→1
D	NORM, POWER	51 - 58	97 - 104	180 - 192 (157 - 170)	35 - 41	12 - 17	173 - 186 (151 - 164)	92 - 99 (88 - 99)	42 - 47
	MANUAL	46 - 53	87 - 94	119 - 130	31 - 36	12 - 17	111 - 122	78 - 84	38 - 44
2	NORM or POWER	50 - 57	-	-	-	-	-	-	42 - 47
L	NORM, POWER or MANUAL	-	-	-	-	-	-	-	50 - 55

( ): models from 1997

Transmission operation program	Vehicle speed (throttle valve open 3%), km/h			
	Torque converter lockup engaged		Torque converter lockup turned off	
	3* (O/D OFF)	4	3* (O/D OFF)	4
NORM	55 - 62	55 - 62	52 - 58	52 - 58
POWER	55 - 62	60 - 66	52 - 58	58 - 63
MANUAL	55 - 62	55 - 62	52 - 58	52 - 58

*: models from 1997

A245E (4A-GE).

Position selector	Operating program Transmission	Vehicle speed (throttle fully open [closed]), km/h							
		1→2	2→3	3→4	[3-4] [4-3]		4→3	3→2	2→1
D	NORM	60 - 67	106 - 120	184 - 200	38-44	12 - 18	175 - 192	100 - 110	41 - 47
	POWER	66 - 75	118 - 133	184 - 200	43 - 50	12 - 18	175 - 192	112 - 126	41 - 47
	MANUAL	46 - 54	86 - 96	118 - 132	38 - 44	12 - 18	110 - 124	77 - 86	38 - 44
2	NORM or POWER	66 - 75	-	-	-	-	-	-	41 - 47
L	NORM, POWER or MANUAL	-	-	-	-	-	-	-	49 - 56

Program gearbox operation	Vehicle speed (throttle valve opened 3%), km/h	
	Torque converter lockup	
	ON	OFF
NORM	66 - 74	61 - 68
POWER	66 - 74	61 - 68
MANUAL	66 - 74	61 - 68

A246E (4A-GE).

Position selector	Work schedule MANUAL TRANSMISSION (gearbox)	Vehicle speed (throttle fully open [closed]), km/h							
		1→2	2→3	3→4	[3-4] [43] 4-3			3→2	2→1
D	NORM	55 - 62	99 - 112	185 - 200	35 - 41	11 - 17	176 - 190	94 - 106	41 - 47
	POWER	63 - 71	110 - 123	185 - 200	40 - 46	11 - 17	176 - 190	102 - 115	41 - 47
	MANUAL	42 - 48	80 - 85	108 - 119	35 - 40	11 - 17	100 - 110	70 - 77	35 - 40
2	NORM or POWER	63 - 69	-	-	-	-	-	-	41 - 48
L	NORM, POWER or MANUAL	-	-	-	-	-	-	-	45 - 52

Program gearbox operation	Vehicle speed (throttle valve open 3%), km/h			
	Torque converter lockup engaged		Torque converter lockup turned off	
	3 (O/D OFF)	4	3 (O/D OFF)	4
NORM	85 - 94	60 - 68	76 - 84	56 - 64
POWER	88 - 100	60 - 68	80 - 89	56 - 64
MANUAL	85 - 94	60 - 68	76 - 84	56 - 64

Interaxle Di fferential Lock Test

Note: For detailed information on the operation of the interaxle differential locking system, see the "Owner's Manual".

1. Perform the check in the "R" range wi th the engine idling. 2. Switch the di fferential lock mode from "AUTO" to "O FF" and back. When switching, make sur e to feel a jolt.

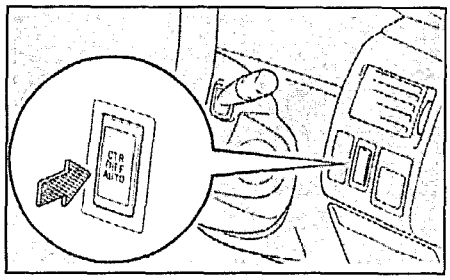

3. If, after the operations described above, th e differential is still not locked, perform an oil pressure check and inspect the components.

Oil pressure check 1. Check the pr essure in the main line and perform a t est with the vehicle fully braked. 2. Che ck the engagement pressure of th e inter-axle differential lock clutch.

a) Unscrew the plug as shown in the illust ration and connect a pressure gauge in it s place.

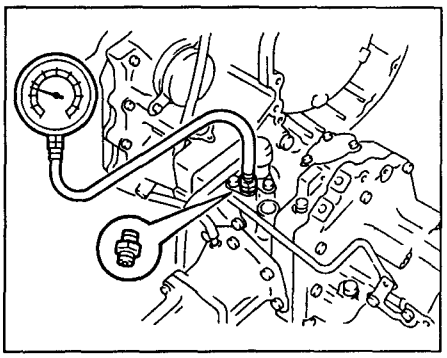

b) Engage the parking brake.
c) Start the engine.
g) Measure the oil pressure in each g ear range of the automatic transmiss ion and compare the obtained value s with those listed in the table "Press ure in the line of the interaxle differe ntial lock clutch".

Table.
Pressure in the line of the center differential locking clutch.

Position of the switch	Operating mode | Engine	Locking clutch engagement pressure center differential, kPa		
		D	L	R
4A-FE				
AUTO	Idle	127 - 177	608 - 873	580 - 790
	Maximum rotational speed	580 - 814	902 - 1049	1410 - 1900
OFF	Idle	0	0	0
	Maximum rotational speed	0	0	0
7A-FE				
AUTO	Idle	127 - 177	608 - 873	580 - 790
	Maximum rotational speed	500 - 735	834 - 980	1265 - 1755
OFF	Idle	0	0	0
	Maximum rotational speed	0	0	0

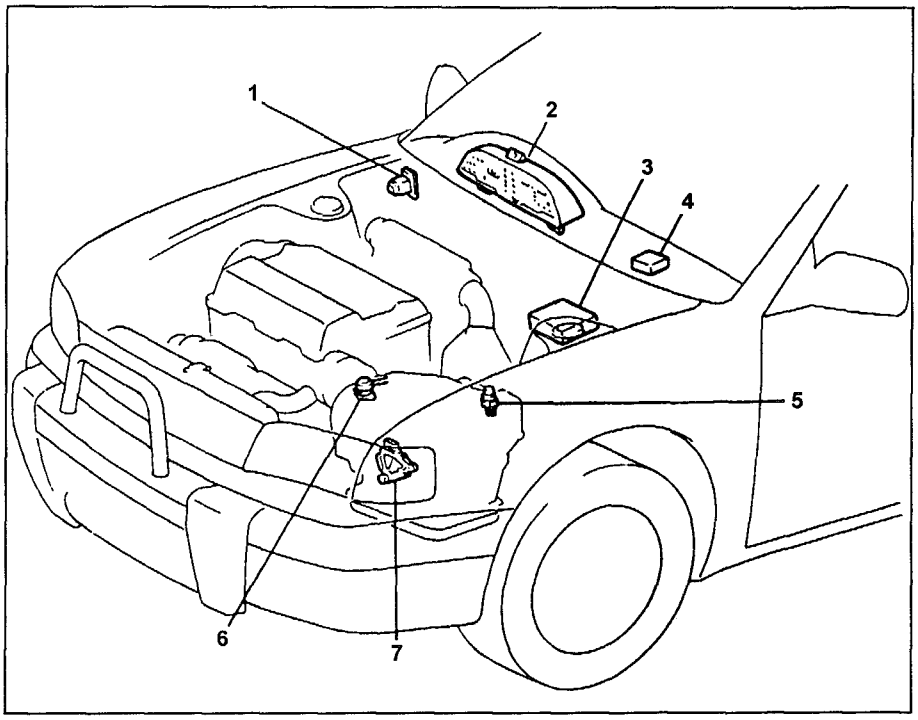

Location of the electrical components of the inter-axle differential lock syst em. 1 - inter-axle differential lock switch, 2 - instrument cluster, 3 - engine electronic control unit (7A-FE), 4 - inter-axle differential lock electronic cont rol unit (4A-FE), 5 - oil pressure sensor, 6 - inter-axle differential lock soleno id valve, 7 - engine start-inhibit switch.

Inspection of components

Note: See the layout of the inter-axle differe ntial lock system components in the figure " Location of the electrical components of the inter-axle differential lock system"

1. Check the inter-axle differential lock s witch.
a) Verify that there is continuity betwee n the switch connector terminals specifi ed in the table.

Start-inhibit switch.

Switch Position	Conclusions
OFF (unlocked) ON (l ocked) SW - E - IND Note: The illumi nation lamp is connected to the "ILL+" a nd "ILL-" terminals.	-

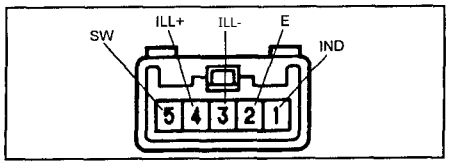

2. Check the electromagnetic valve of the i nteraxle differential lock.

a) Measure the resistance between the con nector terminal and the valve housing. No minal resistance ..... 11–15 Ω

b) Make sure that when battery voltage K is applied to the valve (positive terminal to the connector terminal, negative to th e valve housing) the solenoid valve actua tes.

3. Check the oil pressure switch in the interaxle differential. Ensure that the circuit between the connector terminal and ground is closed when the high-range gear is engaged and open when any other gear is engaged.

4. Check the voltage at the terminals of the interaxle differential lock control unit connector.
a) Turn on the ignition.
b) Measure the voltage at each terminal of the control unit connector (see the table for the corresponding engine, "Voltages at the terminals of the interaxle differential lock electronic control unit").

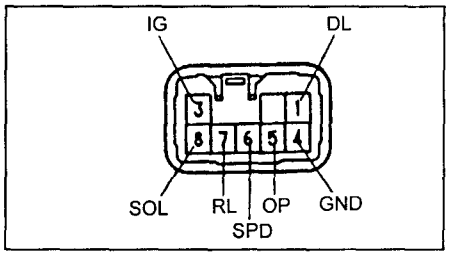

Control unit outputs for the locking of the center differential (4A-FE).

Note:
(A241H (4A-FE, 7A-FE))
Form signal between the outputs "SPD" and "GND".
The vehicle is moving at a speed of about 20 km/h.
The scale division (grid) is 5 V and 20 ms.
Note: the higher the vehicle speed, the higher the frequency of the rotation-frequency pulses generated by the sensor.

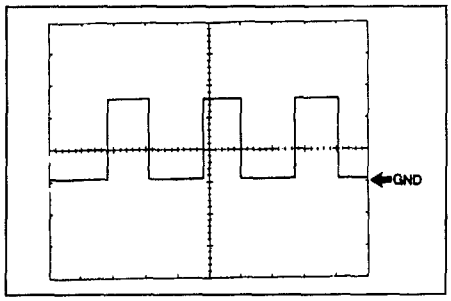

(A241H (7A-FE))

The signal waveform between " terminals NE+" and "NE-".
The measurement is taken at idle after the engine has warmed up.
The scale division is 2 V and 20 ms.
Note: the higher the rotational speed, the lower the frequency and the greater the amplitude.

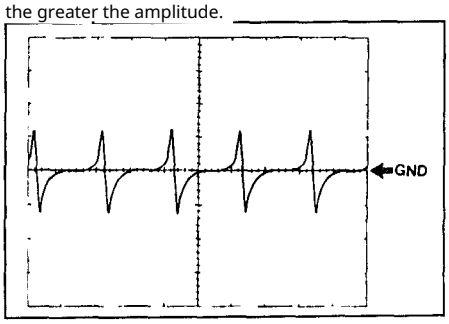

Table. Voltages at the terminals of the electronic control unit for the center differential lock (4A-FE).

Conclusions	Inspection conditions			Voltage, V
DL - GND	Center differential lock switch in the OFF position			10 - 14
	Center differential lock switch in the AUTO position			no more than 0.5
IG - GND	-			10–14
GND - "ground"	Under all conditions			circuit closed
OP - GND	Oil pressure sensor in the OFF position (except in the upshift gear)			10 - 14
	Oil pressure sensor in the ON position (in the upshift gear)			no more than 0.5
SPD - GND	The vehicle is moving at a speed of 20 km/h			pulses
RL - GND	Selector in position "R"			10 - 14
	Selector in any position other than "R"			no more than 0.5
SOL - GND	Switch lock of the interaxle of the differential in the position "AUTO"	Selector in any position other than "R"		10 - 14
		Selector in the position "R"	Ignition switch ON→OFF→ON	no more than 0.5 → not more no more than 0.5 - 10 - 14
			Ignition switch ON. Locking switch block of the interaxle differen AUTO→OFF →AUTO	no more than 0.5 → no no more than 0.5 - 10 - 14
	The inter-axle differential lock switch is in the OFF position			no more than 0.5

Table. Voltage between the terminals of the electronic control unit for the center differential lock (7A-FE).

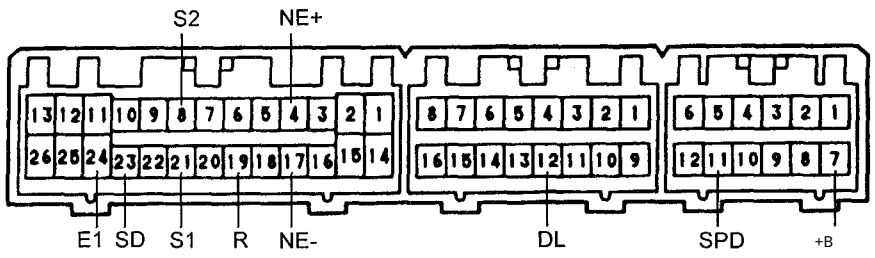

Conclusions	Inspection conditions	Voltage, V
+B - E1	Ignition switch in the "ON" position, engine is turned off	9 - 14
SPD - E1	The vehicle is traveling at 20 km/h	pulses
DL - GND	The inter-axle differential lock switch is in the OFF position	9 - 14
	Inter-axle differential lock switch in the AUTO position	no more than 1.5
NE+ - NE-	Idle	pulses
S2 - E1	The vehicle is stopped	0–1.5
R - E1	Selector in position "R"	7,5 - 14
	Selector in any position other than "R"	no more than 1.5
S1 - E1	Selector in position "N"	9 - 14
	Selector in position "D"	9 - 14

Table. Voltage between the terminals of the electronic control unit for the center differential lock (7A-FE). (continued)

		The selector in any polo- movement, except "R"		9 - 14
SD - E1	Block switch Adjustment of the center differential in the "AUTO" position	Selector in position "R"	Ignition lock- ня OFFON	no more than 1.5→ 9-14-not bo- more than 1.5
			Ignition lock ON. S witch lock of the interaxle diffe- rential AUTO→OFF→ AUTO	no more than 1.5-no more than 1.5-9-14
	Inter-axle differential lock switch in the OFF posi tion			no more than 1.5
E1 - "ground"	Under all conditions			circuit closed

Selector and ignition key lockin g system

Checking the selector lock

1. Turn the ignition key to the "ON" positi on.
2. Move the selector to the "P" position a nd release the selector latch. 3. Make sure the selector is locked in this positio n.
4. While holding the brake pedal depresse d, make sure the selector moves freely thr ough all positions.
5. With the selector locked, press the selector release switch button and m ake sure the selector is unlocked.

Checking the ignition key lock

ignition key

1. Turn the ignition key to the "ACC" position. Note: perform the check for a short peri od of time.
2. Unlock the selector by pressing the selector release switch button, and move the selector to any position except "P".
3. Make sure the ignition key cannot be turned to the "LOCK" position. 4. Move the selector into the "P" range an d release the latch on the selector. Then press and hold the latch on the selecto r.
5. Make sure the ignition key cannot be turned to the "LOCK" position. 6. Release the latch and make sure the i gnition key can be freely moved to the "LOCK" position. Checking the s elector release solenoid

1. Disconnect the connector of the selec tor release solenoid and make sure the valve actuates when battery voltage is a pplied to the "SLS+" (+12 V) and "SLS-" (- 12 V) terminals.

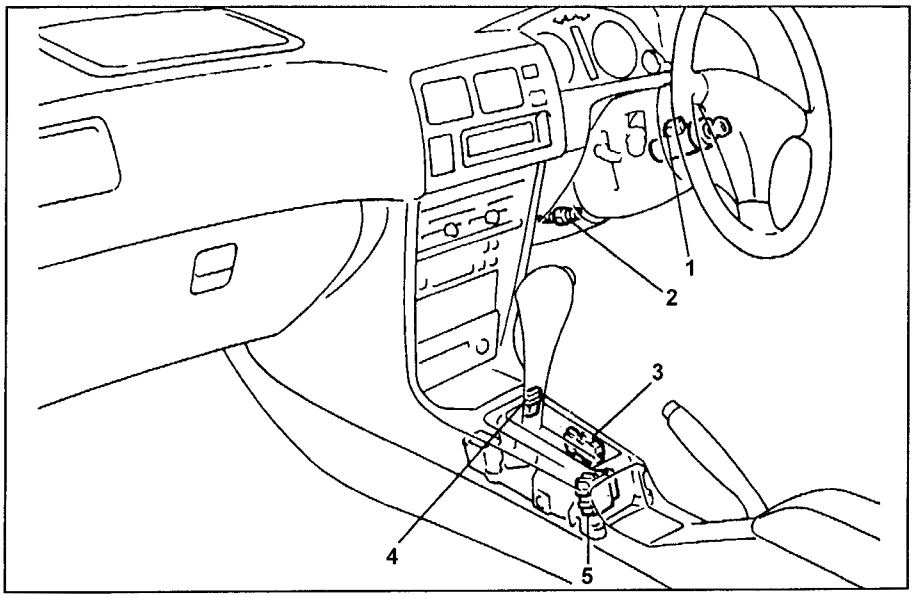

Selector Locking System. 1 - 1 - ignition key lock solenoid valve, 2 - stop light switch, 3 - selector locking system assembly, 4 - selector unlock switch, 5 - selector lock electronic control unit.

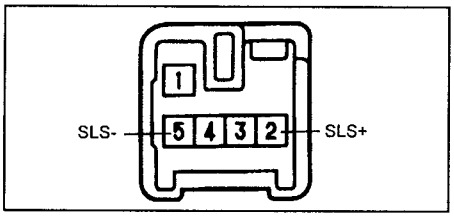

Checking the electromagnet lock valve of the key

ignition

1. Disconnect the solenoid connector and ve rify that the solenoid valve actuates when ba ttery voltage is applied to the KLS+ (+12 V) a nd KLS- (-12 V) terminals.

Note: perform the inspection over a short period of time.

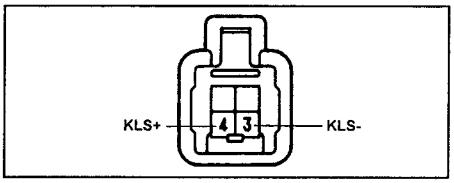

Switch inspection

stop lights

Disconnect the stop-light switch conn ector and verify there is continuity bet ween terminals "1" and "2" when the brake pedal is depressed, and no conti nuity when the brake pedal is released .

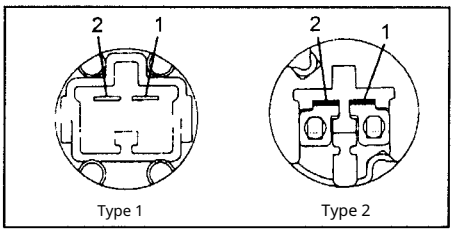

Selector Unlock Switch Ch eck

1. Disconnect the connector and verify the presence of continuity between the specif ied terminals as shown in the table. Note : The selector unlock switch connector is al so connected to the selector unlock solen oid valve (terminals "SLS+" and "SLS-").

Range	Latch position selector	Conclusions
P	OFF	P-P1
	ON	P-P1 P - P_2
Except P	-	P - P_2

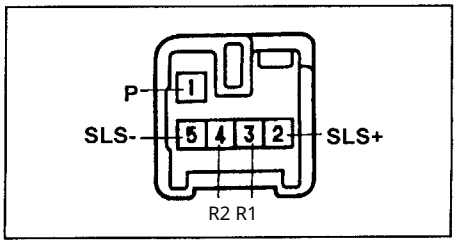

Inspection of the selector lock control unit

1. Make sure that the voltage at the control unit connector terminals corresponds to the values specified in the table "Voltage at the terminals of the selector lock control unit connector".

Note: Before carrying out the inspection, ensure that the battery voltage is 10 - 14 V.

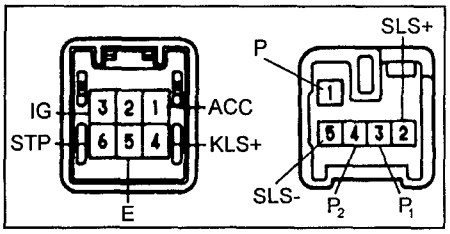

Inspection of components electrical part control systems

1. Measure the voltage at each pin of the engine control unit connector (see Automatic Transmission and table "Voltage at the terminals of the automatic transmission control unit connector when switched on" on ignition.

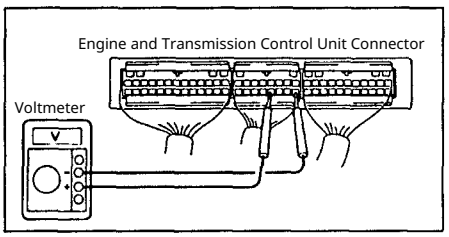

Signal form between terminals SP1 u E1.
The vehicle speed is about 20 km/h (for the A246E - 30 km/h).
Scale division (cell) 5 V and 20 ms.

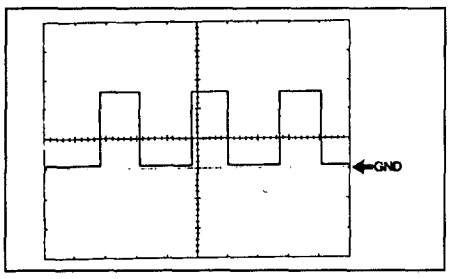

2. Check the electromagnetic clamasters.

a) Disconnect the electromagnetic connector— of thread valves.

b) Measure the resistance between the terminals "S1", "S2", "SL" and "zemley".

Rated resistance ..... 11 - 15 Ω

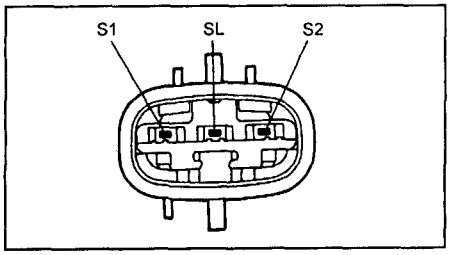

Table. Voltage at the terminals of the selector lock control unit connector.

Terminal	Measurement condition	Voltage, V
ACC - E	Ignition key from OFF position to ACC	0 → 10 - 14
IG - E	Turn the ignition key from the OFF position to ON	0→10-14
KLS+ - E	Ignition key in the ACC position. Selector in the "P" position. Press the lock and move the selector from "P" to any other position.	0→7.5-11.5→6-9
E - "earth"	-	circuit closed
STP - E	The brake pedal released → pressed	010-14
SLS- - E	-	circuit closed
SLS+ - E	The ignition key is in the ON position. The selector is in the "P" position. Press the brake pedal, then release the brake pedal and shift the selector to any other position.	0→8,5 - 13,5→0
P_2 - E	The ignition key is in the ACC position. The selector is in the "P" position. Press the lock release and shift the selector from "P" to any other position.	9 - 13,5→0
P-E	-	circuit closed
P_1 - E	The ignition key is in the ON position. The selector is in the "P" position. Press the brake pedal and shift the selector to any other position.	0→9 - 13,5

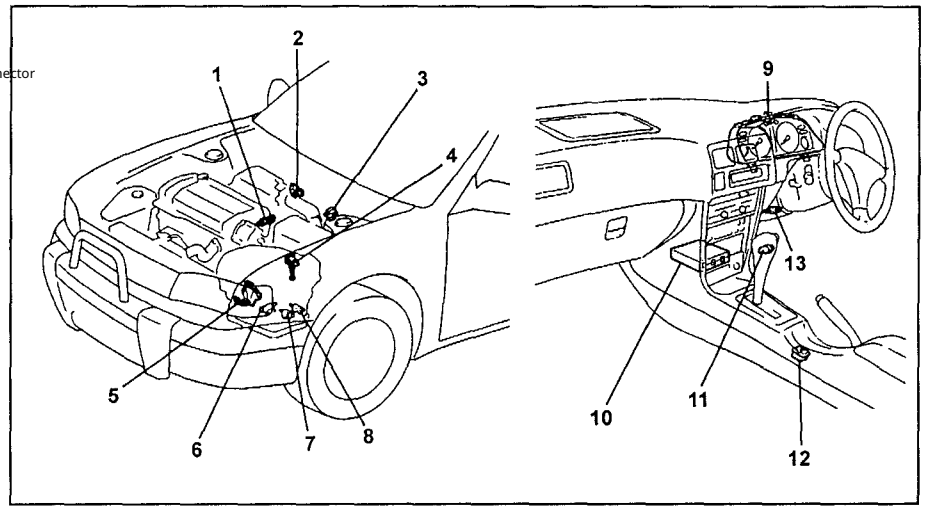

Layout of the electrical components of the control system (A241H). 1 Engine coolant temperature sensor, 2 - throttle position sensor, 3 - diagnostic connector, 4 - vehicle speed sensor, 5 - engine start inhibit switch, 6 - torque converter lock-up sole 4 - noid valve, 7 - solenoid valve No.1, 8 - solenoid valve No.2, 9 - instrument cluster, 10 - engine electronic control unit, 11 - overdrive switch, 12 - automatic transmission mode selector switch, 13 - stop lamp switch.

c) Sequentially apply the battery voltage to the terminals ("S1", "S2", "SL")

(positive terminal) and to "ground" (negative terminal). A click indicates proper operation of the solenoid valves.

3. Check the continuity between the terminals of the switch connector automatic transmission mode selector, as indilisted in the table.

Operating mode AKPP (automatic transmission)	Conclusions
ECONOMY	-
POWER	B - P
MANUAL	B - M

Note: to the "R" and "G" outputs a switch illumination lamp is connected.

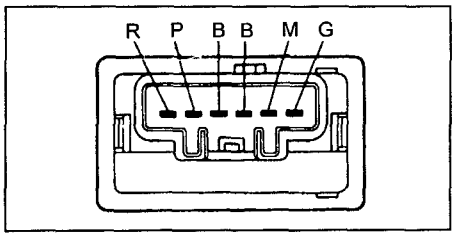

A241H (4A-FE, 7A-FE).

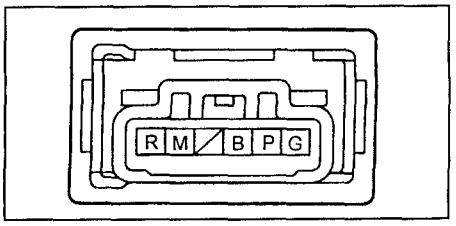

A245E.

4. *(A241H)*
Check the conductivity between the terminal and the housing of the working fluid temperature sensor when the working fluid temperature changes, as shown in the illustration.

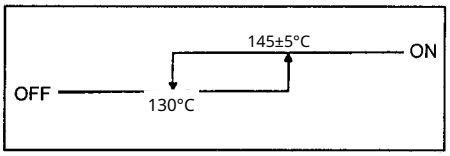

If the conductivity does not change as shown in the illustration, replace the sensor.

5. Check the engine coolant temperature sensor.
Measure the resistance between terminals "1" and "2" of the sensor connector. Replace the sensor if the resistance is not within the range shown in the illustration.

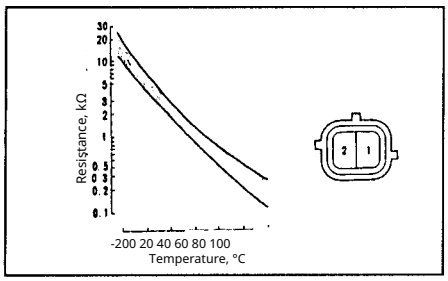

6. Check the engine start-inhibit switch. Check the conductivity between the connector terminals at each range of the selector, as specified in the table.

Selector position	Conclusions
P	N - B C - PL
R	C - RL
N	N - B C - NL
D	C - DL
2	C - 2L
L	C - LL

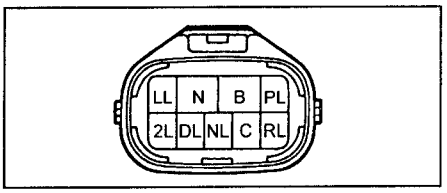

A241H.

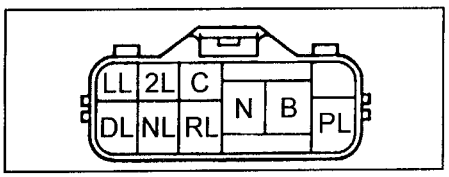

A245E.

If there is no continuity between the specified terminals, replace the starter inhibit switch. 7. Check the upshift indicator.

a) Turn on the ignition.
6) The indicator should be lit when the upshift switch is in the "OFF" position.

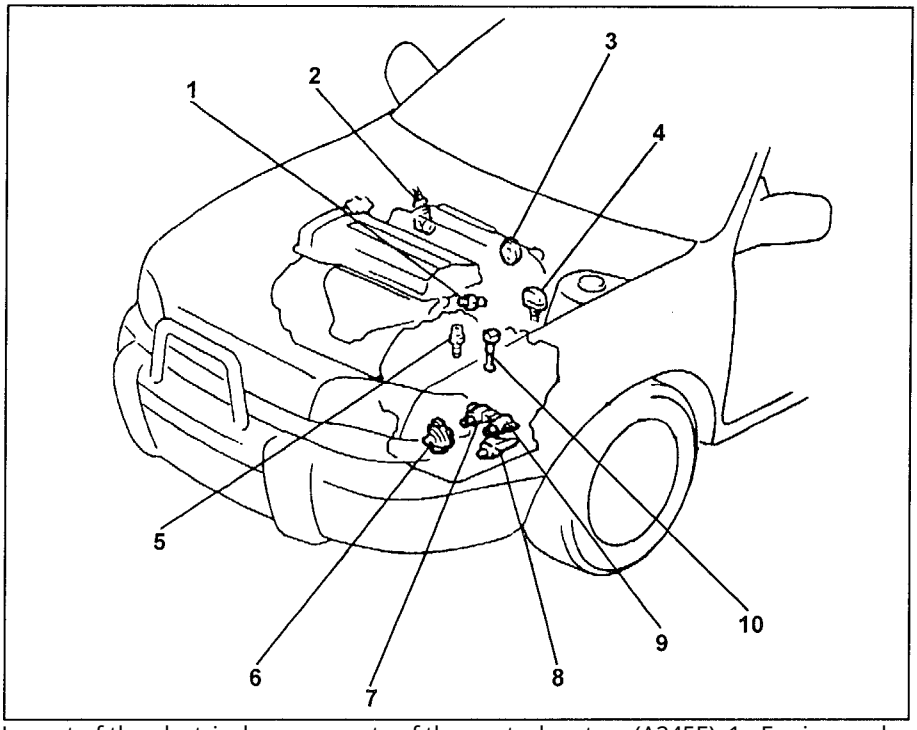

Layout of the electrical components of the control system (A245E). 1 - Engine coolant temperature sensor (4A-FE), 2 - Throttle position sensor (4A-GE), 3 - Throttle position sensor (4A-FE), 4 - Diagnostic connector, 5 - Engine coolant temperature sensor (4A-GE), 6 - Engine start inhibit switch, 7 - Solenoid valve No. 1, 8 - Lockup solenoid valve for the torque converter, 9 - Solenoid valve No. 2, 10 - Speed sensor.

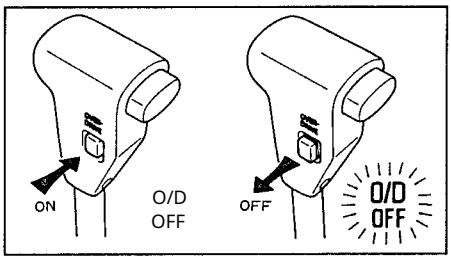

c) Move the upshift switch to the B position
"ON": the indicator should go out.

8. (A241H)
Check the upshift solenoid valve.

a) Disconnect the electromagnetic connector—solenoid valve.
b) Measure the resistance between terminals "1" and "3". Rated resistance: 11–15 Ω

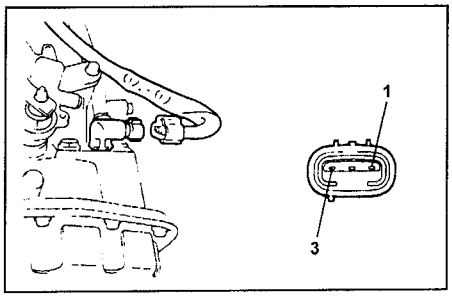

If the resistance does not match the specified value, remove the transmission pan, disconnect the solenoid valve connector and measure the resistance between the connector terminals.

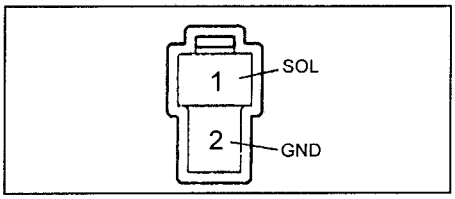

If the resistance still does not match the specified value, replace the solenoid valve. If the resistance is normal, the fault is in the wiring harness between the solenoid valve connectors.

c) When voltage from the vehicle battery is applied to terminals "1" and "3" of the solenoid valve connector, a click from the actuated valve should be heard. If there is no click, replace the valve.

9. Check the upshift switch.

a) Disconnect the upshift switch connector and measure continuity between terminals "2" and "4". When the upshift mode is engaged there should be no continuity between the terminals, and when it is disengaged there should be continuity. If not, replace the switch.

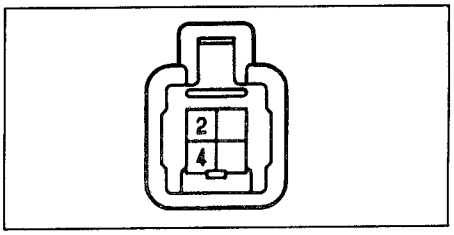

Table. Voltage at the pins of the engine control unit connector (A241N (7A-FE)).

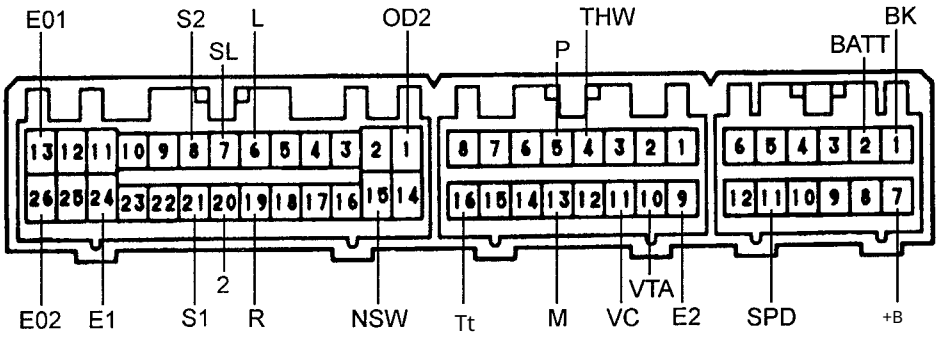

Output	Measurement condition	Voltage, V
BATT-E1	Under any conditions	9 - 14
V/K - E1	Brake pedal depressed	7,5 - 14
	Brake pedal released	0 - 1,5
+B - E1	Engine not running and ignition key in the "ON" position	9 - 14
SPD - E1	Vehicle speed about 20 km/h	pulses
THW - E1	Engine coolant temperature 60 - 120°C	0.2 - 1.0
P - E1	A/T operating mode "POWER"	7.5-14
	A/T operating mode "NORMAL"	0 - 1,5
E2 - "ground"	Under all conditions	circuit closed
VTA - E1	Throttle valve fully closed	0,3 - 0,8
	Throttle valve fully open	3,2 - 4,9
VC - E1	Engine not running and ignition key in the "ON" position	4,5 - 5,5
M - E1	AT mode "MANU" engaged	7,5 - 14
	AT mode "MANU" disengaged	0 - 1,5
Tt - E1	Engine not running, ignition key in the "ON" position. Throttle valve fully closed → open	no more than 1.5 → 7.6 - 8.7
OD2 - E1	Overdrive switch in the "ON" position	9 - 14
	Overdrive switch in the "OFF" position	0 - 3
L - E1	Selector in the "L" position	7,5 - 14
	Selector in any position except "L"	0 - 1,5
SL - E1	Engine not running, ignition key in the "ON" position	0 - 1,5
S2 - E1	Engine not running, ignition key in the "ON" position	0 - 1,5
E01 - "ground"	Under any conditions	circuit closed
NSW - E1	Selector in position "P", "N"	0 - 3
	Selector in positions "R", "D", "2", "L"	9 - 14
R - E1	Selector in position "R"	7,5 - 14
	Selector in positions other than "R"	0 - 1,5
2 - E1	Selector in position "2"	7,5 - 14
	The selector in all positions except "2"	0 - 1,5
S1 - E1	The vehicle is stationary. Selector in position "N"	9 - 14
	The vehicle is stationary. Selector in position "D"	9 - 14
E1 - "ground"	Under any conditions	circuit closed
E02 - "ground"	Under any conditions	circuit closed

Table. Voltage at the terminals of the automatic transmission control unit connector (A245E, A246E).

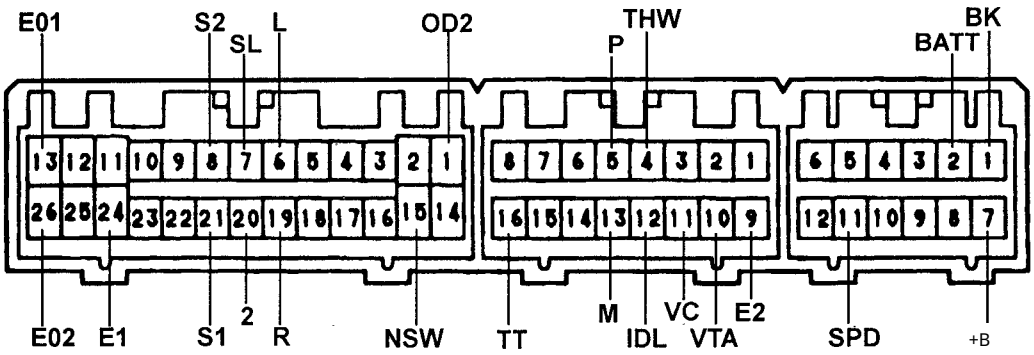

A245E (4A-FE).

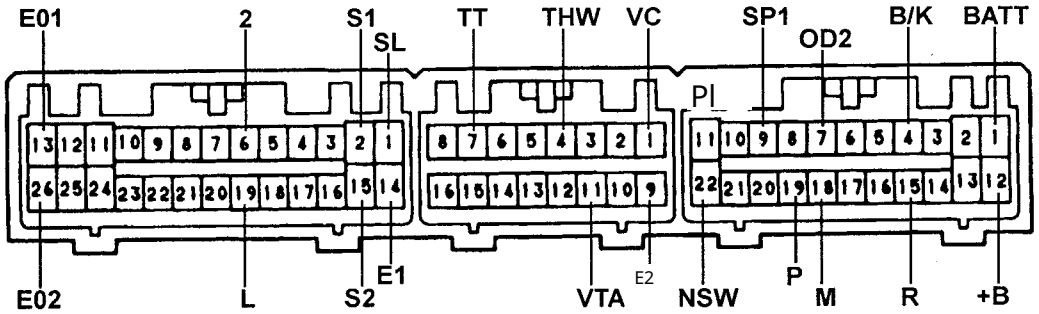

4A-GE (A245E, A246E).

Conclusion	Measurement condition	Voltage, V
BATT - E1	Under any conditions	9-14
V/K - E1	Brake pedal depressed	7,5 - 14
	Brake pedal released	0 - 1.5
+B - E1	The engine does not run, ignition key in the "ON" position	9-14
SPD - E1 (SP1 - E1)*1	Vehicle speed about 20 km/h (for A246E - 30 km/h)	pulses
THW - E1	Engine coolant temperature 60 - 120°C	0.2 - 1.0
P-E1	Automatic transmission "POWER" mode	7.5-14
	A/T operating mode "NORMAL"	0-1.5
E2 - "earth"	Under any conditions	circuit closed
VTA-E1	Throttle valve fully closed	0.3-0.8
	Throttle valve fully open	3.2-4.9
VC - E1	Engine not running and ignition key in the "ON" position	4,5 - 5,5
M - E1	AT mode "MANU" engaged	7.5-14
	AT mode "MANU" disengaged	0-1.5
Tт - E1	Engine not running, ignition key in the "ON" position. Throttle valve fully closed → open	not more than 0.5 - 7.6 - 8.7
OD2 - E1	Overdrive switch in the "ON" position	9 - 14
	Overdrive switch in the "OFF" position	0 - 3
L - E1	Selector in the "L" position	7,5 - 14
	Selector in any position except "L"	0 - 1,5
SL - E1	The vehicle is stopped	0 - 1,5
S2 - E1	The vehicle is stopped	0 - 1,5
E01 - "ground"	Under any conditions	circuit closed
NSW - E1	Selector in position "P", "N"	0 - 3
	Selector in positions "R", "D", "2", "L"	9 - 14

Table. Voltage at the terminals of the automatic transmission control unit connector (A245E, A246E). (continued)

R - E1	Selector in position "R"	7,5 - 14
	Selector in positions other than "R"	0 - 1,5
2 - E1	Selector in position "2"	7,5 - 14
	The selector in all positions except "2"	0 - 1,5
S1 - E1	The vehicle is stationary. Selector in position "N"	9 - 14
	The vehicle is stationary. Selector in position "D"	9 - 14
E1 - "ground"	Under any conditions	circuit closed
E02 - "ground"	Under any conditions	circuit closed
(IDL - E1)	Throttle valve fully closed	0 - 3
	Throttle valve fully open	9 - 14

( ): models with 4A-FE engine.
( )*1: models with 4A-GE engine.

Control cable
to the throttle valve
Removal and installation

Note: perform installation in reverse order of removal.
1. Wash the outer surfaces of the transmission housing.
2. Unscrew the drain plug in the transmission oil pan and drain the operating fluid into a suitable container.

Tightening torque... ..... 18 N·m

3. Remove the engine start-inhibit switch.

a) Unscrew the nut and remove the lever of the engine start-inhibit switch.

b) Use a screwdriver to unloosen the lock of the nut.

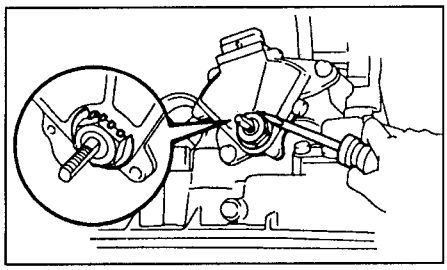

c) Unscrew the nut, remove the lock and the gasket.
c) Unscrew the two bolts and remove the engine start-inhibit switch.

4. Unscrew the oil pan mounting bolts. Remove the pan and the gasket. Note: some fluid will always remain in the pan. Do not damage the filler tube or the sealing ring.

Tightening torque.. .....5 N·m

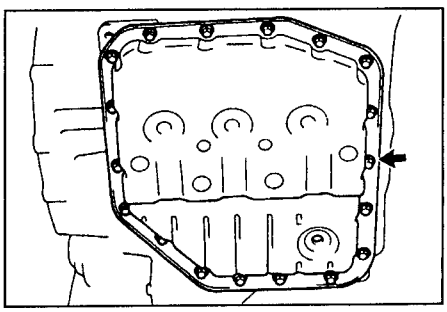

Installation note: secure the magnets in the transmission oil pan as shown in the figure.

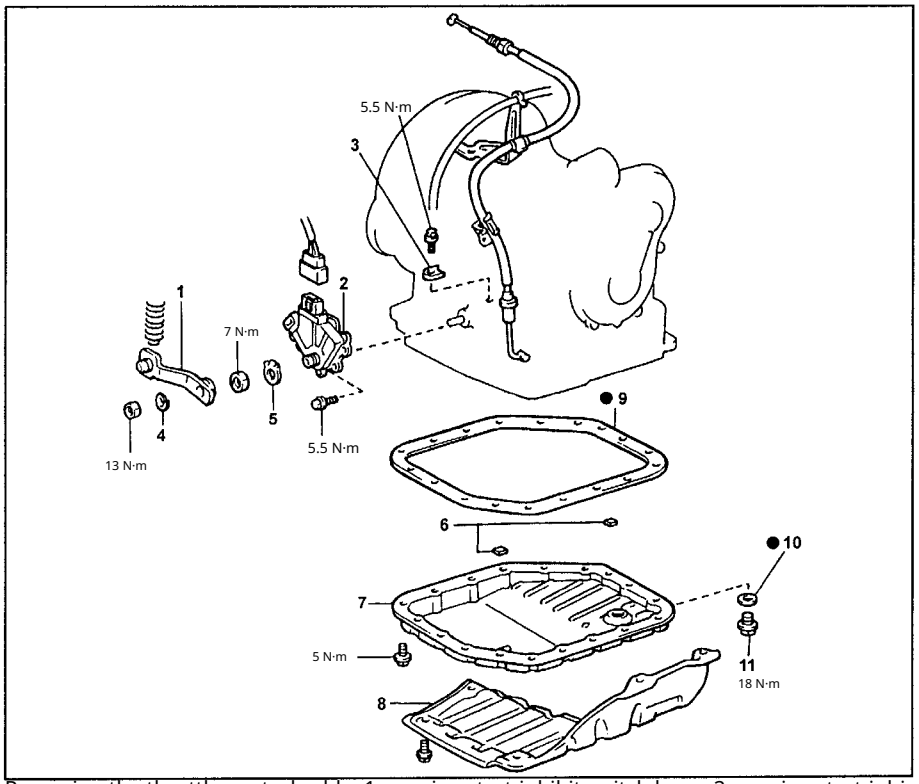

Removing the throttle control cable. 1 - engine start-inhibit switch lever, 2 - engine start-inhibit switch, 3 - retainer, 4 - magnet, 7 - locking washer, 5 - retainer, 6 - oil pan, 8 - engine protection cover, 9, 10 - gasket, 11 - drain plug bolt.

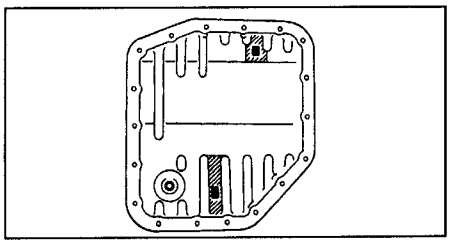

5. Disconnect the throttle control cable.

a) Disconnect the cable from the cam in the transmission.

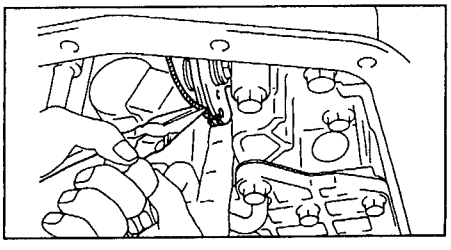

b) Unscrew the cable mounting bolt and remove the cable.
Tightening torque. .....5.5 N·m

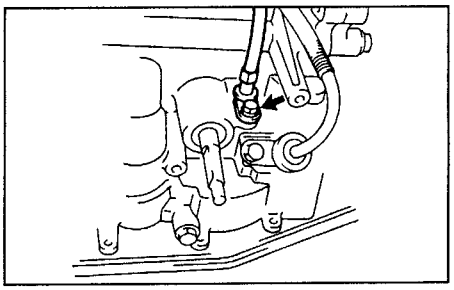

Installation note: if the cable is new, install the retainer on the inner cable.

a) Bend the cable so that the bend radius is about 200 mm.
b) Pull the inner cable out until slight resistance is felt. Hold it in that position.

c) Install the retainer at a distance of 0.8 - 1.5 mm from the end of the outer sheath , as shown in the illustration.

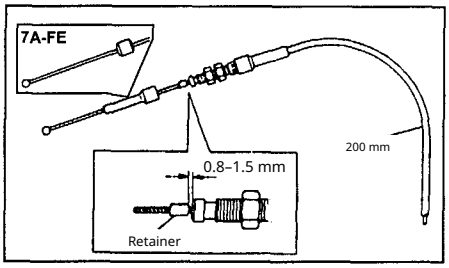

Note: after installation, adjust the throttl e control cable.

Drive shaft oil seals

Removal

1. Drain the automatic transmission fluid.
2. Remove the lower engine shield.
3. Remove the right and left drive shafts.
4. Remove the left drive shaft oil seal using a pul ler.

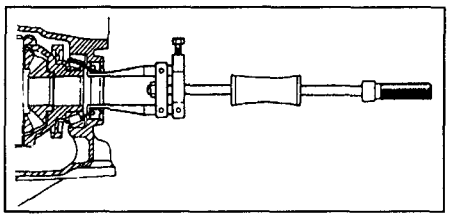

5. Remove the right drive shaft oil seal using a screwdriver. Note: To avoid da maging the oil seal, wrap the screwdriver wit h electrical tape.

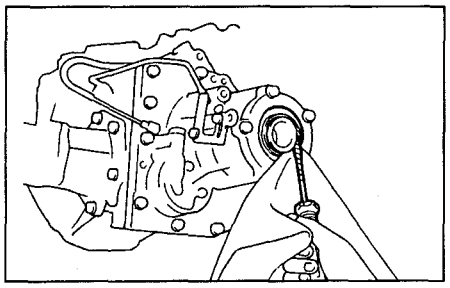

Installation

1. Install the left drive shaft oil seal.

a) Install a new oil seal into the trans mission housing using a driver. Pr ess-in depth

oil seal ..... 5.3 ± 0.5 mm

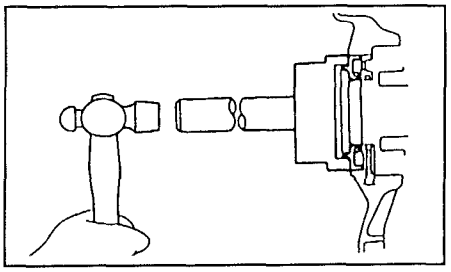

b) Lubricate the working lip of the oil se al with grease. 2. Install the r ight drive shaft oil seal.

a) Install using a drift

new oil seal up to the surface of the holder.

Press-fitting depth

of the oil seal. ..... 0±0.3 mm

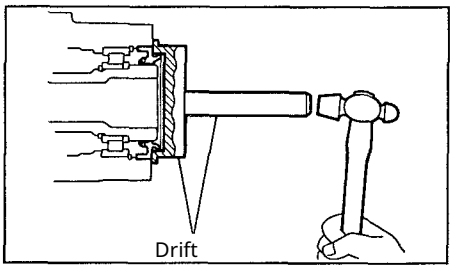

b) Lubricate the working lip of the oil seal with grease.

3. Install the drive shafts.
4. Install the lower engine guard.

5. Fill the automatic transmission wit h operating fluid (see the chapter "Maint enance and General Inspection and Adju stment Procedures"). Ca ution: do not overfill above the specified l evel.

Output shaft oil seal of t he transfer case

Removal

1. Drain the oil from the transfer case.

2. Using a puller, remove the oil seal as show n in the illustration.

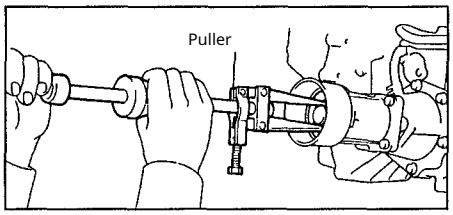

Installation

1. Apply grease to the working lip of the oil s eal.
2. Install the oil seal using a driver.

Install the oil seal.

Press-fitting depth

oil seal ..... 1.5 ± 0.4 mm

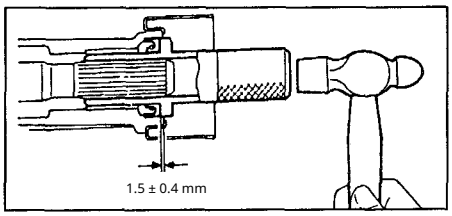

3. After installing the oil seal, pour oil int o the transfer case (see the chapter "Mai ntenance and General Inspection and A djustment Procedures").

Removal and installation of the transmission

as an assembly (models from 1996)

Note: Perform removal and installation as shown in the illustration "Removal of the transmission as an assembly".

Torque converter and driv e plate of the torque converter

Inspection

1. If the ATF (automatic transmission fluid) is contaminated, flush the torque conver ter and the ATF cooler.

2. Inspection of the one-way clutch. a) I nstall the special tool into the inner rac e of the one-way clutch.

b) Install the special tool so that the ma rks on the torque converter hub and th e outer race of the one-way clutch are a ligned.

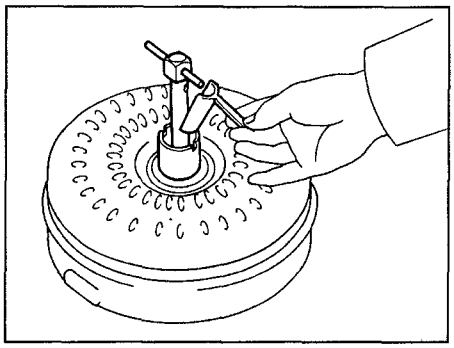

c) With the torque converter held stati onary, the clutch must not rotate cou nterclockwise and must rotate freely c lockwise.

d) Flush the torque converter and rec heck the one-way clutch. If the clutch i s defective, replace the torque convert er.

3. Inspect the ring gear and the drive pl ate of the torque converter.

a) Install the pointer indicator and measure the runout of the torque converter drive plate.

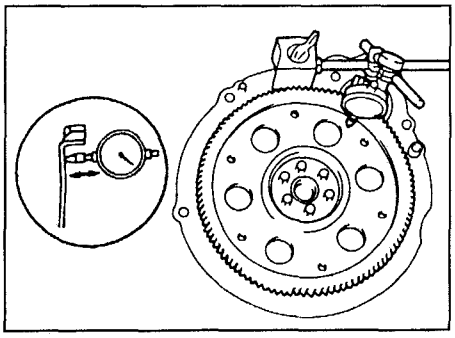

b) If the runout of the torque converter dr ive plate exceeds the specified value, repl ace the torque converter drive plate.

Specified runout ..... 0.2 mm

When installing a new plate, pay attention t o the orientation of the spacer bushings. Tig hten the bolts. Bolt tightening torques.

..... 83 N·m

4. Checking the runout of the torque co nverter bushing.

a) Temporarily install the torque conve rter on the torque converter drive plat e. Install a dial indicator and measure the runout.

b) If the vibration exceeds the nominal value, try to eliminate this defect by re orienting the torque converter. If it is n ot possible to eliminate the defect, the torque converter must be replaced.

Nominal runout. .....0.3 mm

Note: apply alignment marks to ensure subsequent installation of the torque co nverter. b) Remove the torque conve rter. 5. Check the installation of th e torque converter.

a) Before installing the torque convert er, measure distance A as shown in th e illustration.

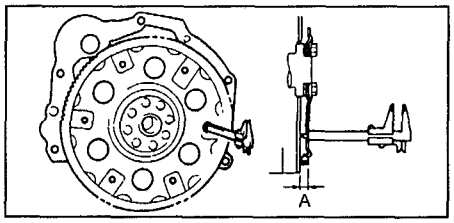

b) After installing the torque converte r, using a caliper-

Using a compass and rulers, measure t he distances from the torque converter bosses to the front flange of the trans mission housing. Nomin al distance. ..... *A + 1 мм*

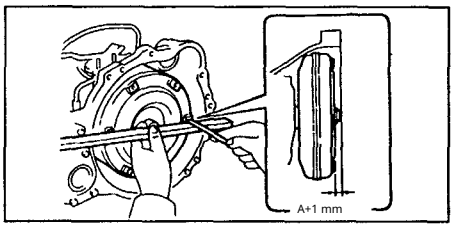

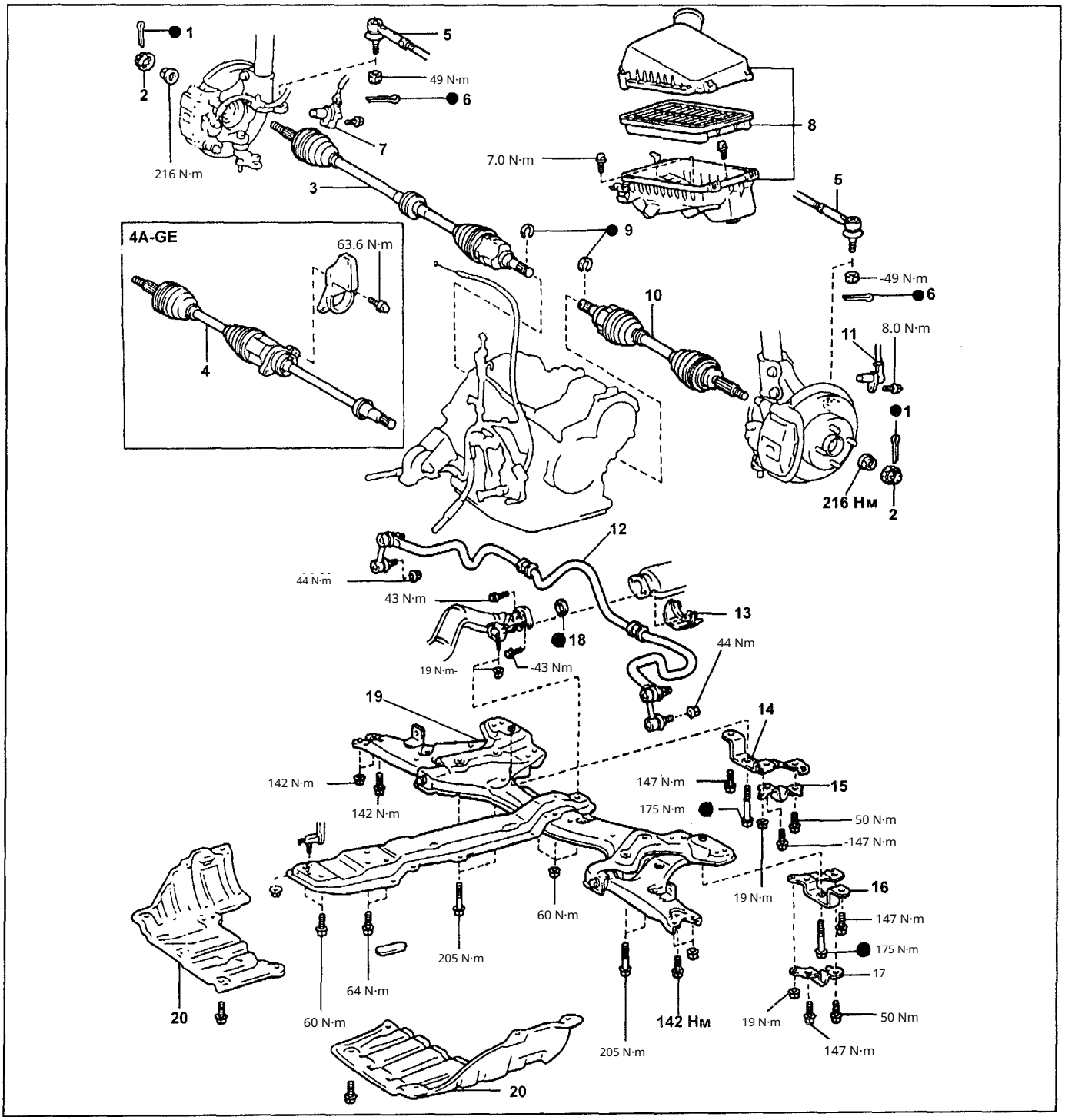

Removal of the gearbox assembly. 1 - split pin, 2 - locknut, 3, 4 - drive shaft, 5 - tie rod end, 6 - split pin, 7 - speed sen sor, 8 - air filter assembly, 9 - retaining ring, 10 - drive shaft, 11 - speed sensor, 12 - anti-roll bar (stabilizer), 13 - front exhaust pipe bracket, 14, 16 - lower suspension arm bracket, 15, 17 - stabilizer arm bracket No. 1, 18 - gasket, 19 - cr ossmember assembly with lower suspension arms, 20 - lower protective cover.

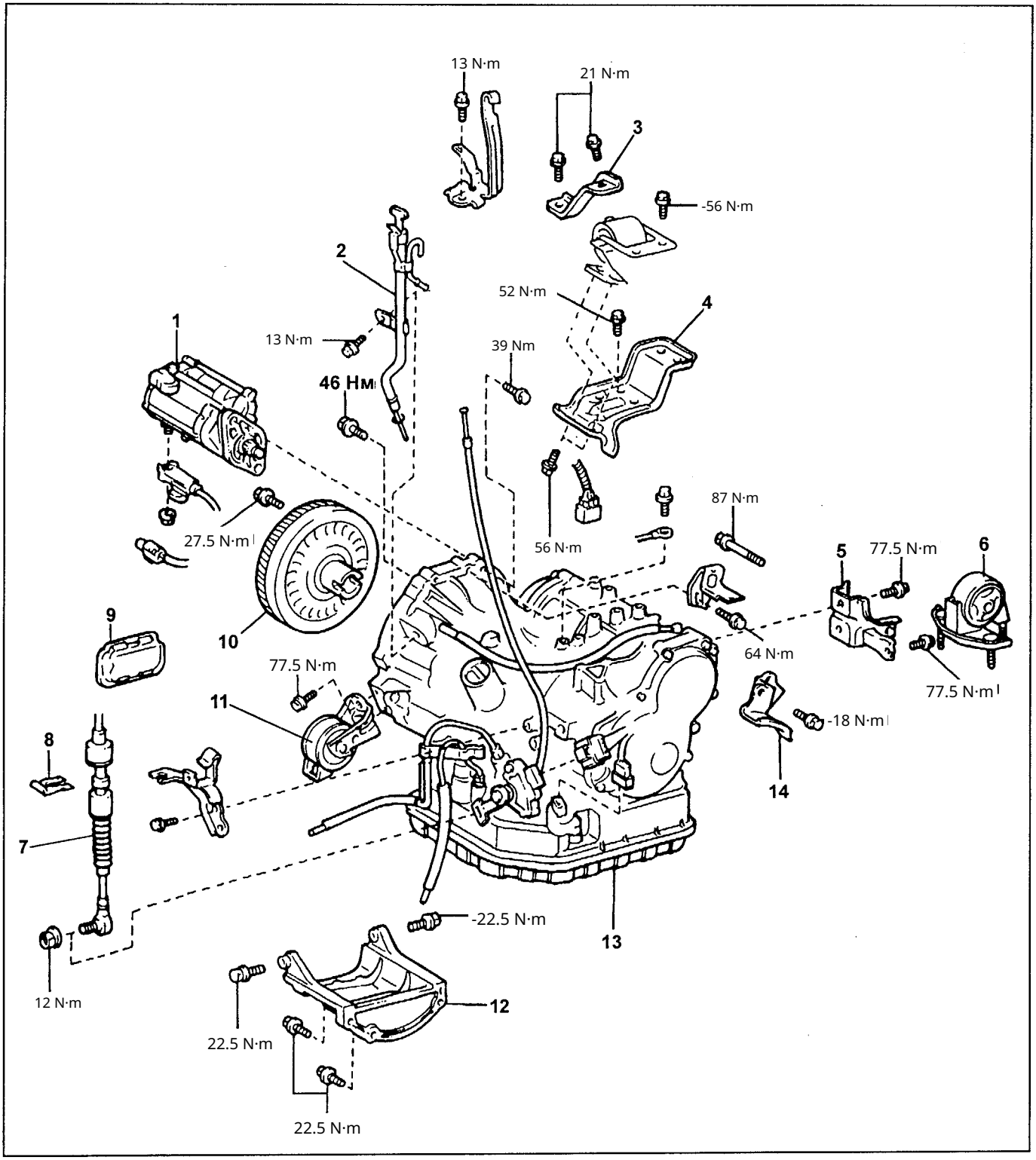

Removal of the transmission assembly (continued). 1 - starter, 2 - oil filler tube and dipstick, 3 - left engine mount, 4 - left engine bracket, 5 - rear engine bracket, 6 - rear engine mount isolator, 7 - automatic transmission control cable, 8 - retainer, 9 - bracket, 10 - torque converter, 11 - front engine mount isolator and bracket, 12 - bracket, 13 - transmission assembly, 14 - bracket.

Transfer case

General description

The "Carib" vehicles have permanent all-wheel drive, the so-called "Full time 4WD ", with a center differential lock.

Note: For more detailed information about the operation of the 4WD system, see the "Owner's Manual" chapter. The center differential lock is mechanical. When the button on the instrument panel is pressed, a signal permitting locking is sent to the electronic control unit for the center differential lock, and, under the necessary conditions, the control unit activates the hydraulic actuator located in the transfer case, which "rigidly" locks the center differential. This leads to an even distribution of torque between the front and rear axles, significantly improving off-road capability.

Removal

Unscrew the six nuts securing the transfer case to the transmission housing. Using a plastic hammer, remove the transfer case from the transmission.

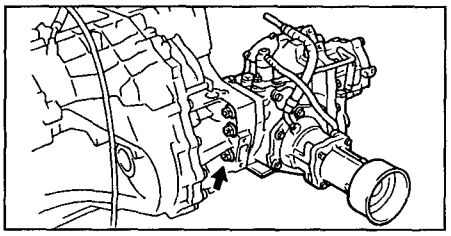

Installation

1. Install a new gasket in the transfer case crankcase.

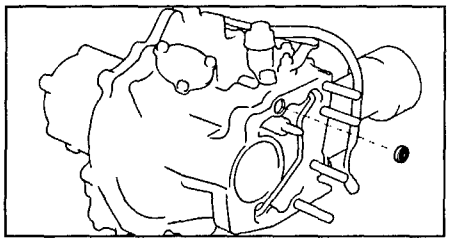

2. Install the transfer case onto the transmission housing.
   a) Thoroughly clean the mating surfaces of the transfer case and the transmission.
   b) Apply sealant to the mating surface of the transfer case as shown in the illustration. Sealant...
.. THREE BOND 1131 or
equivalent

Note: install the transfer case immediately after applying the sealant.

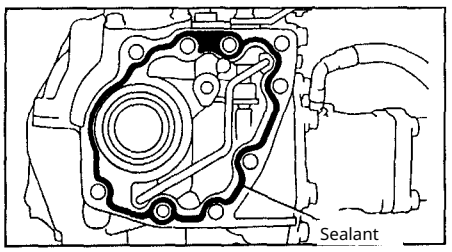

c) Tighten the six nuts securing the transfer case.

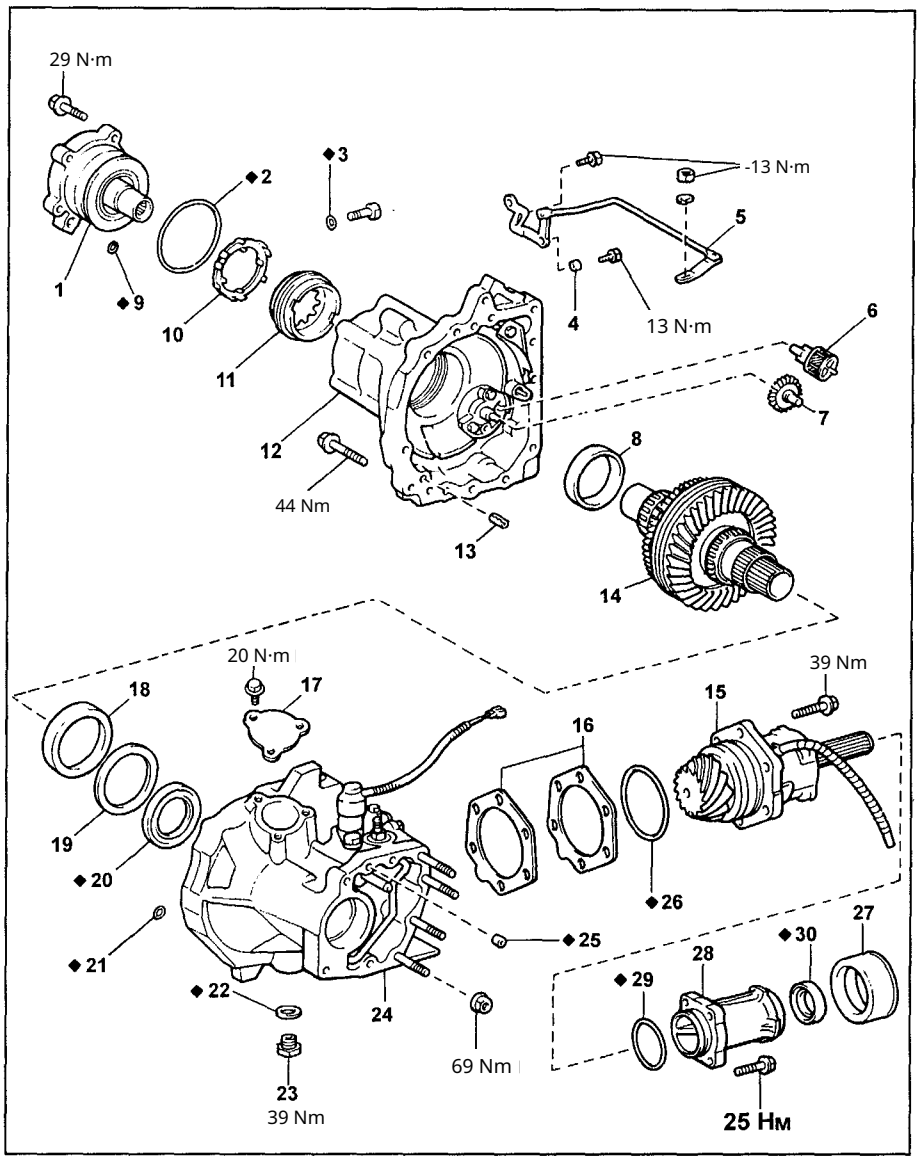

Transfer case with an inter-axle differential lock system. 1 - holder of the intermediate shaft of the axle gear, 2 - ring seal, 3 - ring seal, 4 - lever guide, 5 - return mechanism, 6 - filter, 7 - driven gear of the oil pump, 8 - outer bearing race, 9 - oil seal, 10 - locking plate of the adjusting nut, 11 - adjusting nut, 12 - transfer case housing cover, 13 - guide pin, 14 - assembled shaft of the drive gear of the main drive, 15 - bearing holder of the driven gear, 16 - adjustment shim, 17 - inspection cover of the transfer case, 18 - outer bearing race, 19 - thrust washer, 20 - oil seal, 21 - gasket, 22 - gasket, 23 - drain plug, 24 - transfer case housing, 25 - gasket, 26 - ring seal, 27 - dust cover, 28 - transfer case housing extender, 29 - ring seal, 30 - oil seal.

Tightening torque ..... 69 N·m

3. Loosen the locking bolt shown in the illustration, ensure that the return mechanism lever moves to the free position (see illustration), and then tighten the locking bolt.

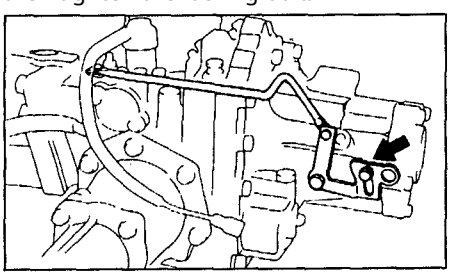

Disassembly

1. Remove the return mechanism.

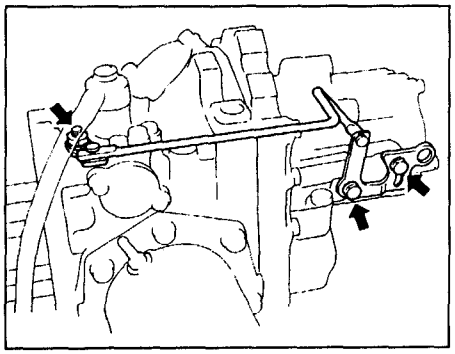

2. Remove the transfer case housing extender.

a) Unscrew the four bolts and remove the transfer case oil pan extension.

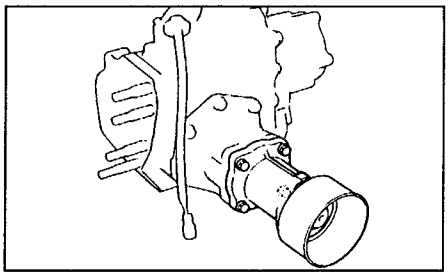

b) Remove the O-ring and bellows from the oil pan extension of th e transfer case.

c) Remove the oil seal.

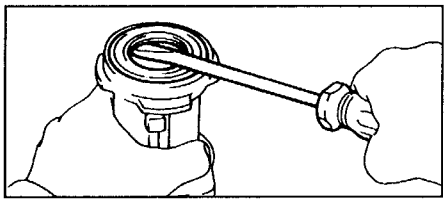

3. Remove the intermediate holder- of the shaft of the half-axle gears.

a) Unscrew the five bolts and remove the shaft holder intermediate axle shaft gears.

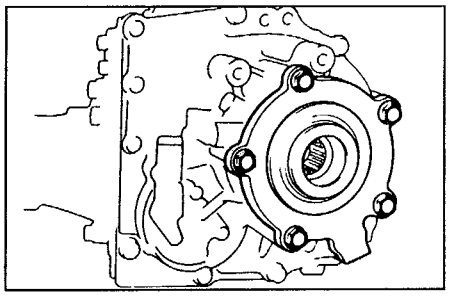

b) Remove the O-ring seal and the ga sket from the holder of the intermedi ate shaft of the half-axle gears.

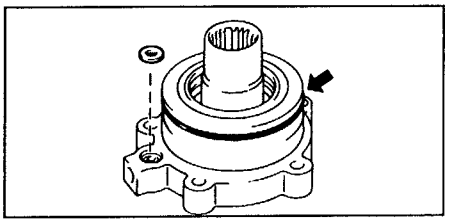

4. Unscrew the three bolts and remove the inspection cover of the transfer ca se.

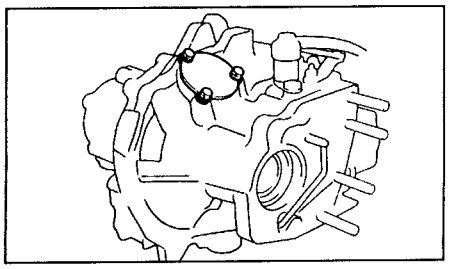

5. Check the total preliminary preload.

a) Measure with a special fixture and a dynamometer prelimi- narily

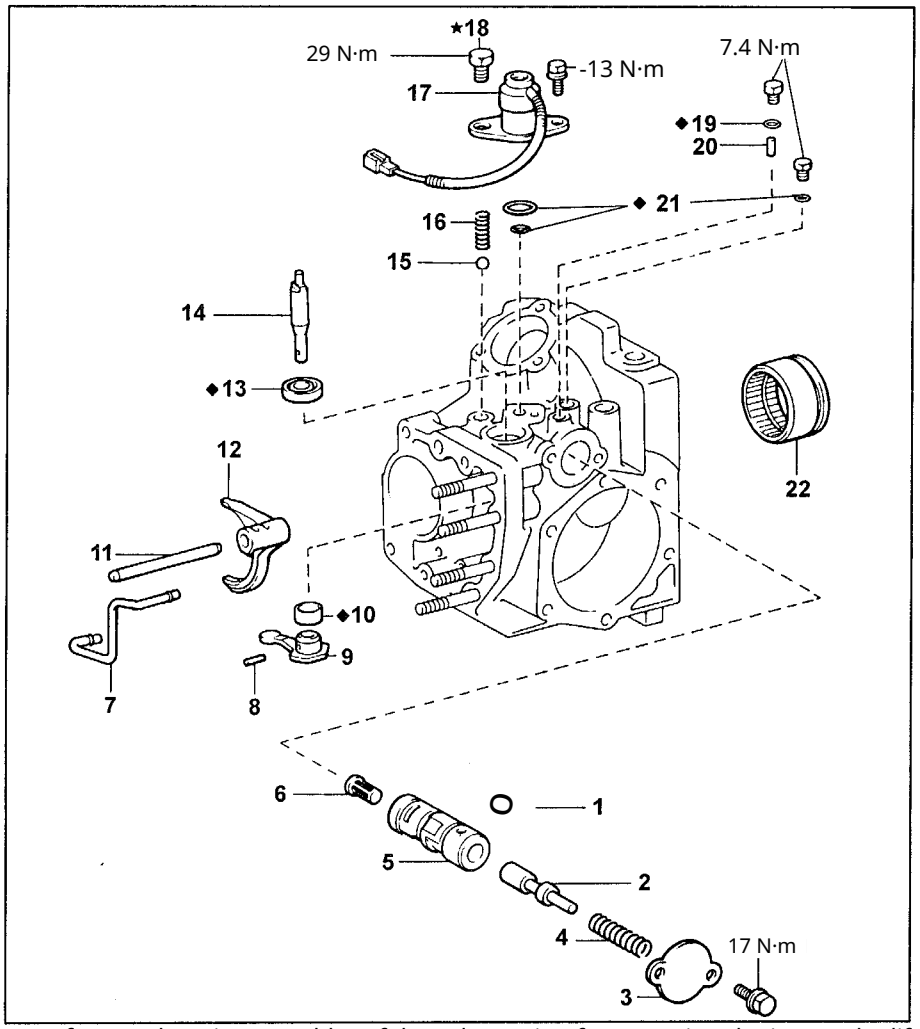

Transfer case housing. 1 Holder of the valve spring for engaging the inter-axle dif ferential lock, 2 - valve for engaging the inter-axle differential lock, 3 - cap of the v alve sleeve for engaging the inter-axle differential lock, 4 - spring, 5 - valve sleeve, 6 - filter, 7 - pressure supply tube for the inter-axle differential lock, 8 - pin, 9 - lev er for e - ngaging the inter-axle differential lock, 10 - spacer bushing, 11 - fork s haft for engaging the inter-axle differential lock, 12 - fork for engaging the inter-a xle differential lock, 13 - oil sea l, 14 - rod of the lever for engaging the inter-axl - e differential lock, 15 - ball, 16 - spring, 17 - solenoid valve for engaging the inter- axle differential lock, 18 - plug, 19 - O-ring seal, 20 - pin, 21 - O-ring seal, 22 - inter -axle differential lock coupling.

Tension of the driven gear To obtain the value of the total preload of the final d rive provided by the traction, add to the value of the preliminary preload the ga p between the driven and driving gears of the final drive. .....

Preload (at the moment of starting)... 8.8 - 13.7 N

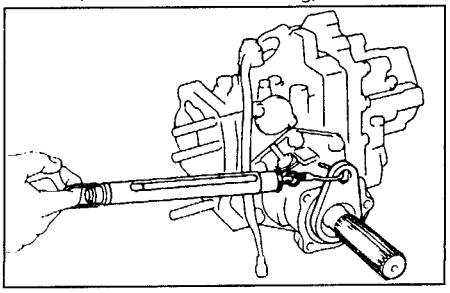

b) Measure the total pre-load.

Note: when measuring the preload do not install shims and do not apply sealant.

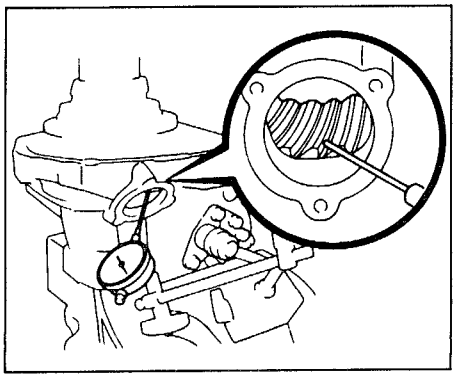

If the total preload does not match the allowable value, adjust it (see "Transfer Case Assembly" section).

6. Using a dial indicator, measure the runout of the driven pinion of the final drive.
Permissible runout..... 0.13 - 0.18 mm
If the runout exceeds the allowable value, adjust it (see "Transfer Case Assembly" section).
7. Check the tooth contact pattern of the gears. If necessary, adjust the contact pattern (see "Transfer Case Assembly" section).
8. Remove the bearing retainer of the driven gear.
a) Unscrew the six bolts and remove the bearing retainer.

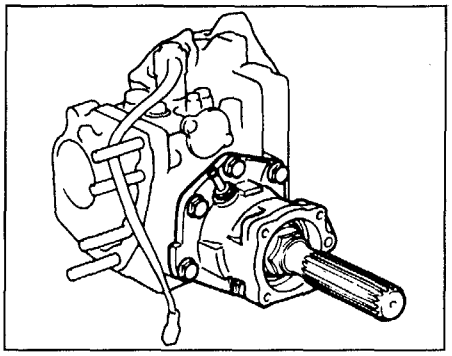

b) Remove the oil seal and the shim washers from the bearing retainer.

9. Unscrew ten bolts and remove the transfer case housing cover.

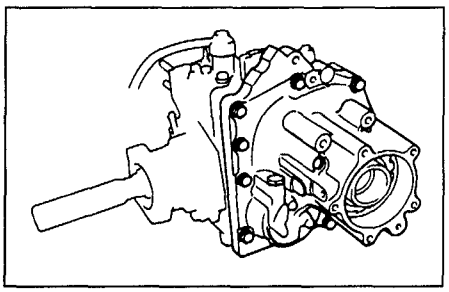

10. Remove the drive gear shaft of the main gear assembly.

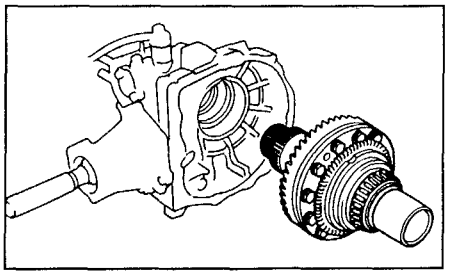

11. Remove the gasket from the transfer case housing.

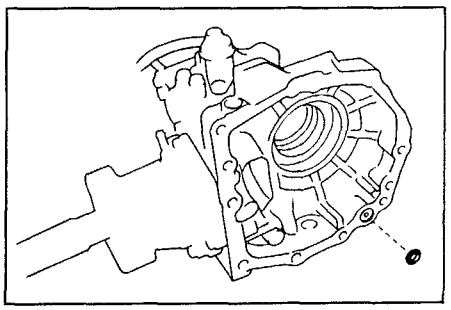

12. Remove the oil pump filter and the driven gear.

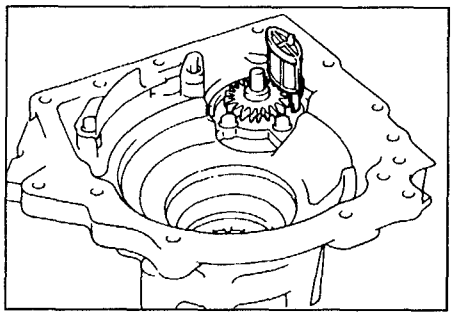

13. Remove the lock plate of the adjusting nut.
a) Unscrew the bolt and remove the lock plate from the transfer case housing cover.

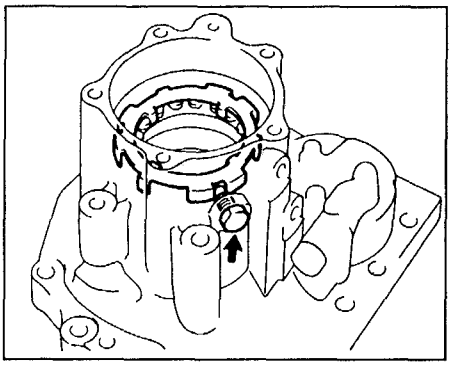

b) Remove the oil seal from the bolt.

14. Remove the outer bearing race of the right-side differential.
a) Using a special tool, extract the adjusting nut and thrust washer from the transfer case housing cover.

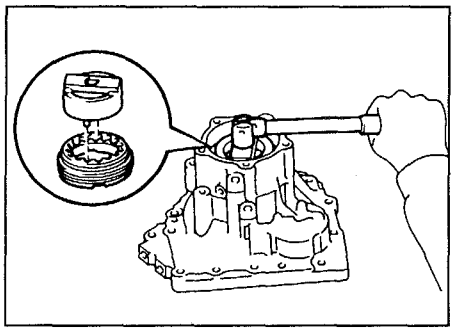

b) Remove the outer ring using a brass drift.

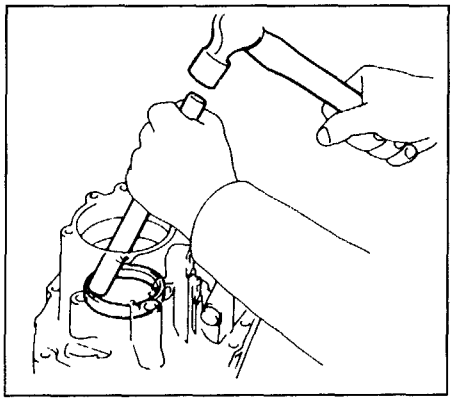

15. Remove the outer bearing ring of the left side of the differential and the thrust washer.

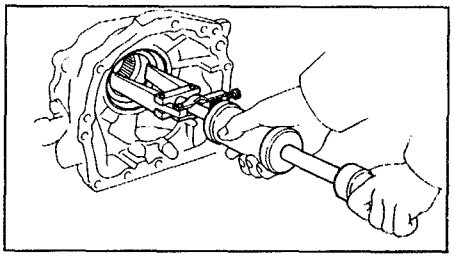

16. Remove the oil seal.

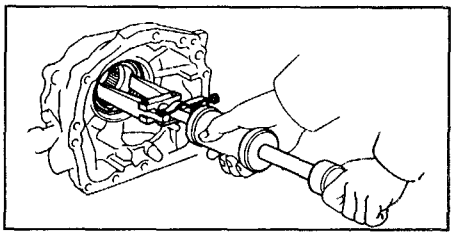

Assembly
1. Install the transfer case housing.
a) Install the thrust washer.
b) Press in the outer bearing race.
bearing.

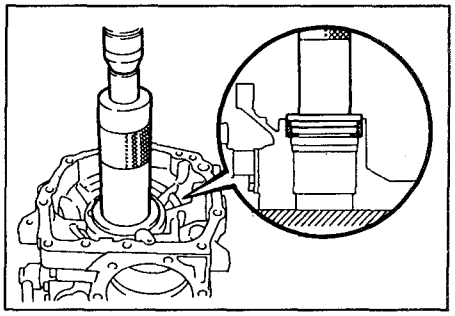

2. Install the transfer case housing cover.
a) Press the outer ring of the bearing into place.

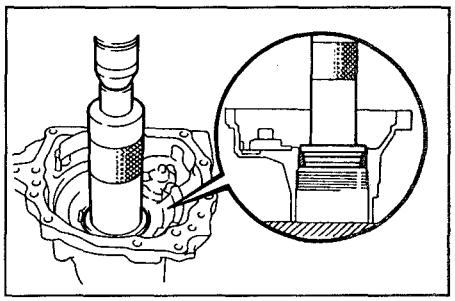

b) Install the adjustment nut and the thrust washer. Tighten the adjustment nut until it contacts the outer bearing ring.

3. Adjust the runout of the main drive gear.
a) Install two shims on the driven gear bearing retainer.

Note: First install shims whose thickness matches the thickness of the removed shims.

b) Install the bearing retainer for the driven gear, tightening the mounting bolts. Tightening torque.. ..... 39 N·m

Note: no do not install oil seal.

c) Install the assembled shaft of the drive gear of the main drive.

d) Measure the runout of the drive gea r of the main drive using a dial indicato r.

Permissible runout.....0.13 - 0.18 mm

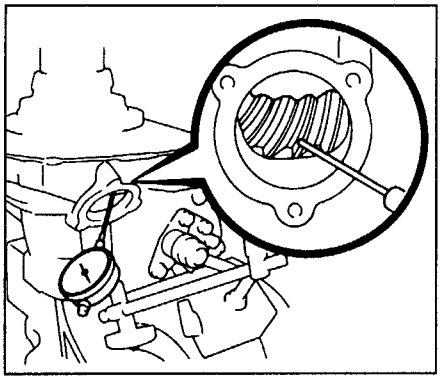

If the runout exceeds the permissibl e value, adjust it by selecting a shim of the appropriate thickness (see tabl e). Mark | Thickness | Mark | Thick ness

71	2,13	83	2,49
72	2,16	84	2,52
73	2,19	85	2,55
74	2,22	86	2,58
75	2,25	87	2,61
76	2,28	88	2,64
77	2,31	89	2,67
78	2,34	90	2,70
79	2,37	91	2,73
80	2,40	92	2,76
81	2,43	93	2,79
82	2,46	94	2,82

4. Adjust the overall tension.

a) Install the transfer case oil pan cov er.

Note: when measuring the preload do not install shims and do not apply sealant.

b) Measure the preliminary tension of the driven gear of the final drive using a special tool and a dynamometer.

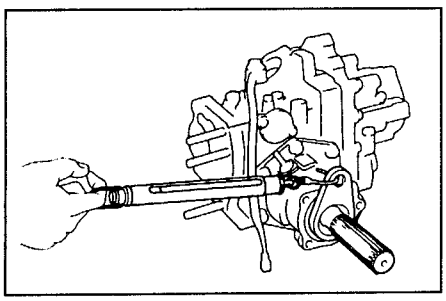

Note: To obtain the total tension K, add to the measured preload the following values: for un its that were in service 4.9–8.8 N

bearing... .....

for the new bearing... 12.7 - 13.7 N If n ecessary, adjust the overall tension by ti ghtening the adjustment nut using a sp ecial tool.

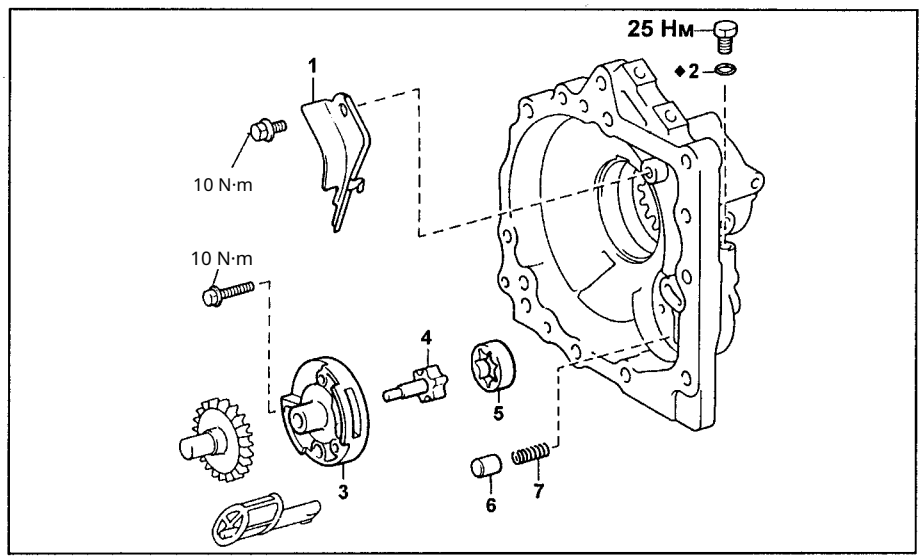

Transfer case oil pan cover. 1 - guide plate for the dipstick, ring seal, 3 - oil pump co ver, 4 - inner rotor of the oil pump, 5 - outer rotor of the oil pump, 6 - bypass va lve, 7 - spring.

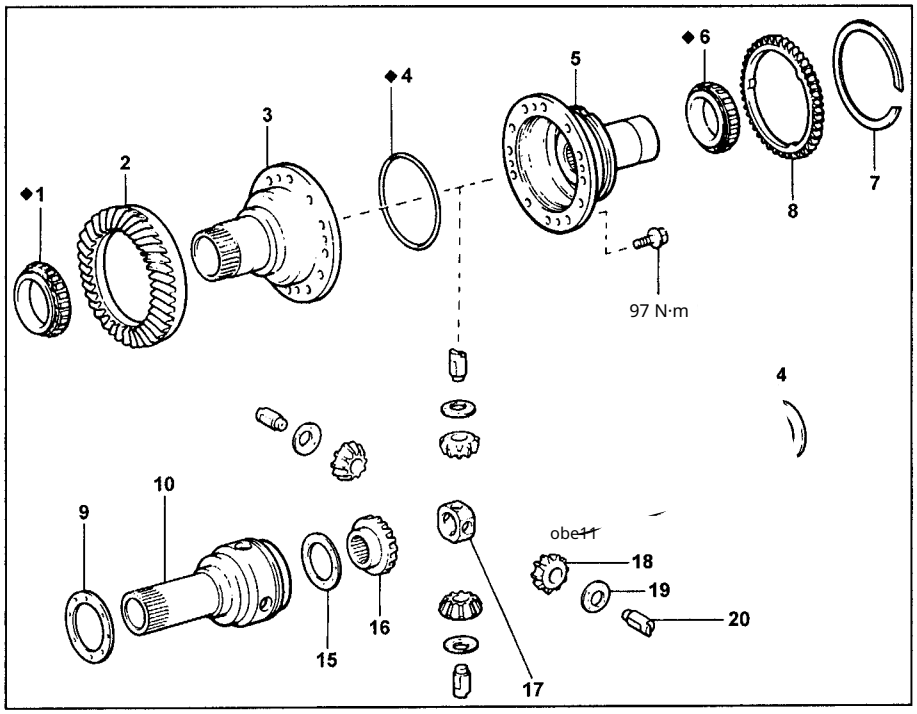

Drive gear shaft of the final drive. 1 - tapered roller bearing, 2 - drive gear of the f inal drive, 3 - left cup of the final drive drive gear, 4 - oil seal, 5 - right cup of the fi nal drive drive gear, 6 - bearing, 7 - retaining ring, 8 - drive gear of the oil pump, 9 - thrust washer, 10 - interaxial differential, 11 - spacer sleeve, 12 - retaining ring, 13 - side gear of the interaxial differential, 14 - conical spring washer, 15 - thrust washer, 16 - side gear of the interaxial differential, 17 - satellite shaft holder, 18 - satellite of the interaxial differential, 19 - thrust washer of the interaxial differenti al satellite, 20 - satellite shaft of the interaxial differential.

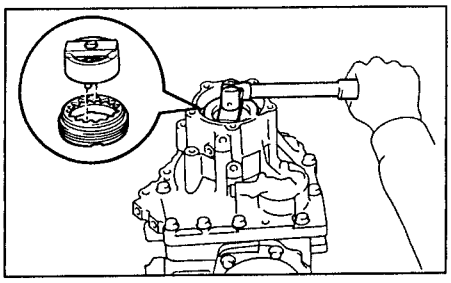

5. Check the runout of the final drive dri ve gear.

a) Using a dial indicator, measure the runo ut of the drive gear of the final drive. Allowabl e runout: 0.13 - 0.18 mm...

b) If the runout exceeds the allowabl e value, select a thrust washer (insta lled in item "2"). After adjustment, re check the overall preload.

6. Check the tooth contact pattern of the final drive gears. If necessary, adjust the contact pattern by installing adjustment shims of the appropriate thickness (see table).

Mark	Thickness	Mark	Thickness
A	0,30	F	0,45
B	0,33	G	0,48
C	0,36	H	0,51
D	0,39	J	0,54
E	0,42	K	0,57

7. Remove the transfer case oil pan cover.
8. Remove the drive gear shaft of the final drive assembly.
9. Remove the bearing retainer of the driven gear.
10. Extract the outer race of the transfer case bearing and the thrust washer.

11. Install the oil seal as shown in the illustration. After installing the oil seal, apply grease to its working lip. Seal seating depth...

.....3 мм

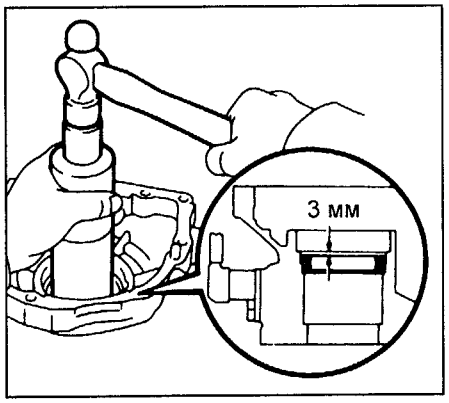

12. Install the outer ring of the transfer case housing.
a) Install the thrust washer (selected earlier).
6) Press in the outer ring of the bearing.

13. Install the bearing holder of the driven gear.
a) Lubricate the new ring seal with transmission oil and install it into the driven gear bearing retainer. b) Install the previously matched shim(s) and the driven gear bearing retainer, then tighten the mounting bolts. Tightening torque...

.....39 Н·м

14. Install the assembled driven gear shaft of the final drive.
15. Install the transfer case housing cover.
a) Place a new gasket on the transfer case housing.

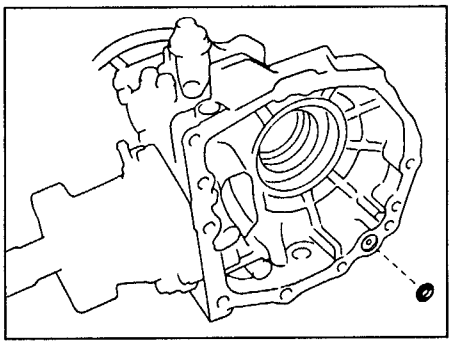

b) Install the filter and the pump driven gear into the transfer case cover.

c) Apply sealant to the transfer case housing as shown in the illustration. Immediately after applying the sealant, install the cover onto the transfer case housing. Sealant. ..... THREE BOND 1281 or equivalent

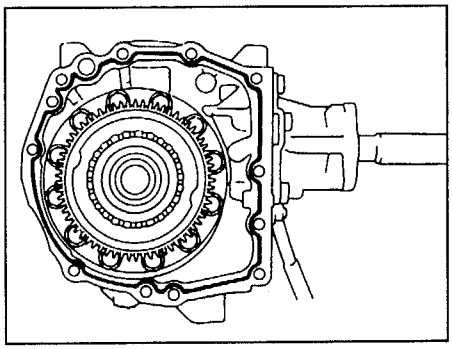

c) Install the transfer case housing cover, tightening the mounting bolts.

Tightening torque ..... 44 N·m
16. Check the overall preliminary preload (see above).
17. Install the locking plate of the adjusting nut.
18. Install the inspection cover of the transfer case.
a) Apply the sealant as shown in the illustration.
Sealant. ..... THREE BOND 1281 or equivalent Note: install the cap immediately after applying the sealant.

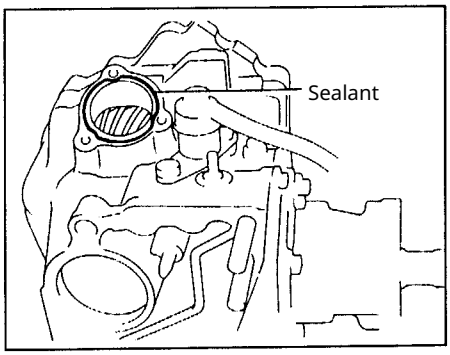

b) Install the inspection cover of the transfer case and tighten the mounting bolts.
Tightening torque... ..... 20 Н·м
19. Install the support for the intermediate shaft of the axle gears. a) Lubricate the new ring seal with transmission oil and install it. Install the gasket.

6) Install the carrier of the intermediate shaft of the axle gears, tightening the bolts.
Tightening torque... ..... 25 N·m
20. Install the extension of the transfer case.
a) Press in the new oil seal using a driver and a hammer as shown in the illustration. After installation, apply grease to the working surface.

of the oil seal.

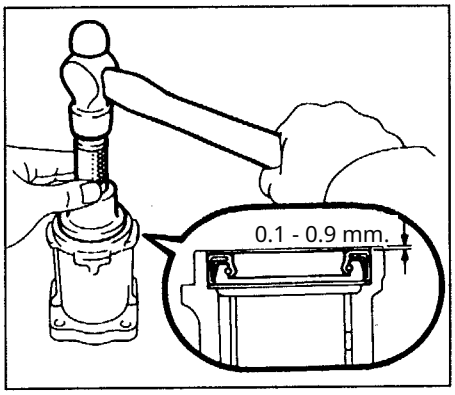

..... THREE BOND 1281 or Seal recess.... 0.1 - 0.9 mm ...
equivalent

b) Lubricate the new O-ring with transmission oil. c) Install the dust cover and O-ring onto the transfer case extension housing.

d) Install the transfer case extension housing onto the driven gear bearing carrier and tighten the bolts. Tightening torque..
..... 25 N·m
21. Install the return mechanism as shown in the illustration and tighten the bolts. Tightening torque.....
..... 13 N·m

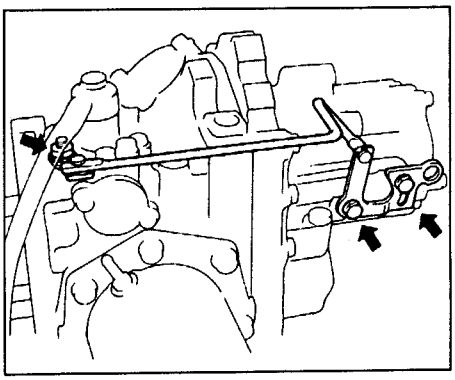

Driveshaft

Removal

1. Disconnect the front driveshaft crankshaft
   a) Apply alignment marks to both flanges.
   b) Unscrew the four nuts, remove the bolts and washers.

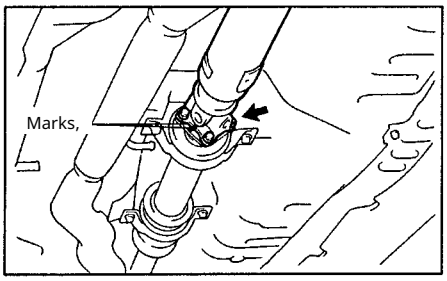

   c) Remove the front propeller shaft assembly.

Note: Do not damage the output shaft oil seal of the transfer case.

   d) Insert the plug into the transfer case.

2. Loosen the bolts of the coupling.
   a) Press and hold the brake pedal.
   b) Using a socket wrench, loosen the bolts by 1/2 turn. Note: Place a rag as shown in the illustration to avoid damaging the rubber seal.

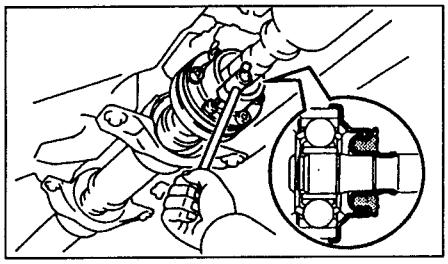

3. Remove the intermediate and rear propeller shafts.
   a) Apply alignment marks to both flanges.

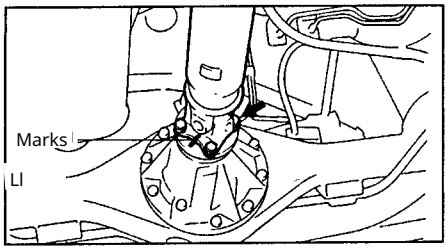

   b) Unscrew the four nuts, remove the bolts and washers.
   c) Unscrew the four bolts, remove the two washers and the propeller shafts assembly.

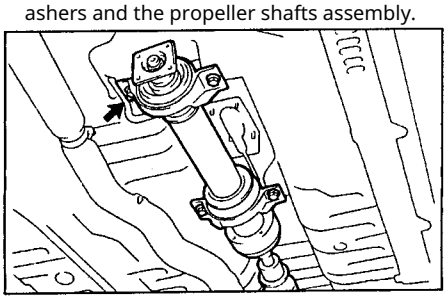

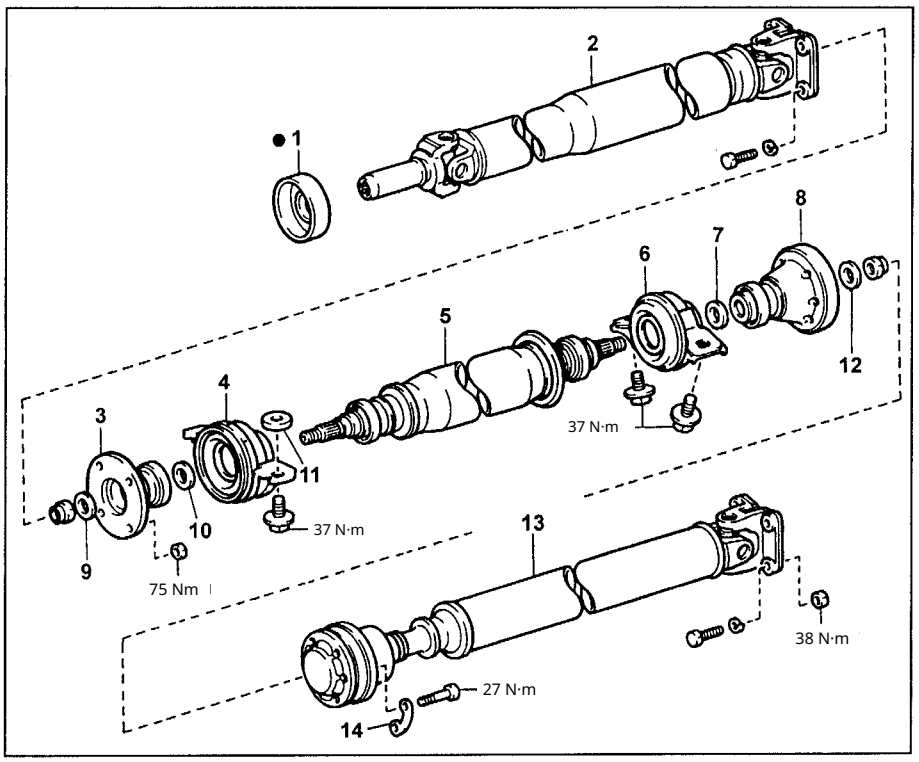

Propeller shaft: 1 - boot, 2 - front propeller shaft, 3 - front flange, 4 - front support bearing, 5 - intermediate propeller shaft, 6 - rear support bearing, 7, 9, 10 - leaf washer, 8 - rear flange, 11 - adjustment washer, 12 - washer, 13 - rear propeller shaft, 14 - plate.

4. Disconnect the intermediate propeller shaft from the rear propeller shaft. a) Apply alignment marks to the coupling and the flange. Note: Do not damage the surface of the parts when applying the alignment marks.

Apply alignment marks.

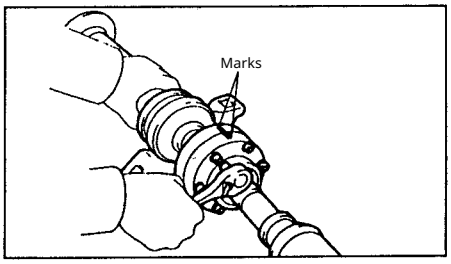

   b) Using a socket wrench, unscrew the six bolts, remove the three washers and disconnect the propeller shafts.

Inspection

1. Check the propeller shaft runout.

Maximum runout.. ..... 0.8 mm

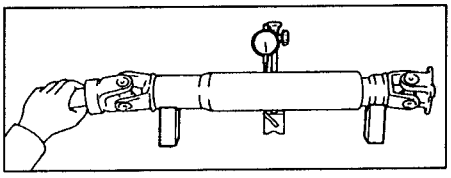

2. Check the flange runout of the intermediate propeller shaft.
   a) Check the runout of the front flange.

Maximum runout..... 0.1 mm

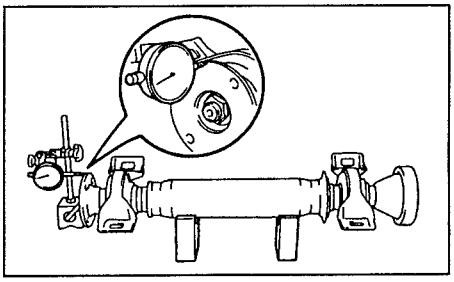

   b) Check the runout of the rear flange

In the horizontal and vertical directions. Maximum runout. 0.1 mm

.....

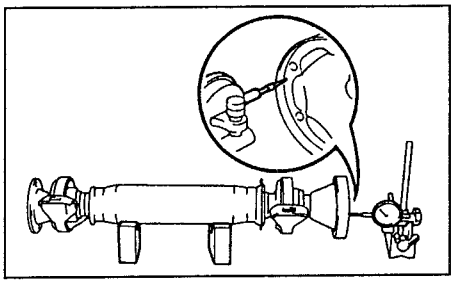

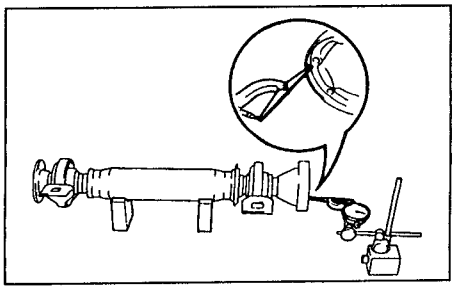

3. Check the axial play of the universal joi nt bearings by turning the yoke by hand while holding the propeller shaft.

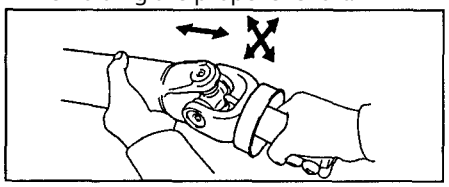

4. Check that the joint of the coupling m oves smoothly without binding or excess ive play. Check for damage and grease le aks on the coupling. If any faults or dam age are found, replace the coupling.

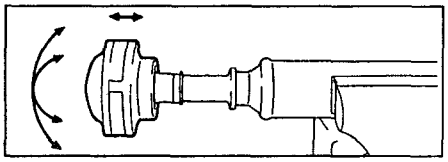

Disassembly

1. Remove the rear support bearing. a) Using a hammer and chisel, free the locked part of the nut. b) While holdi ng the front flange, unscrew the nut and remove the washer.

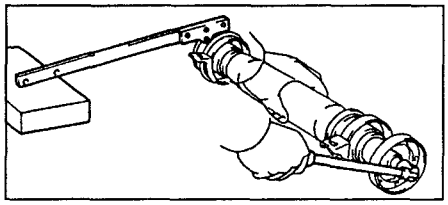

b) Apply alignment marks to the flange and the shaft.

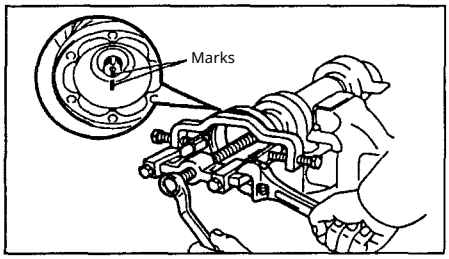

c) Use a puller to remove the flange.

d) Remove the support bearing and t he thrust washer. 2.

Remove the front support bearing. Not e: Removal of the front support bearing is performed similarly to the removal o f the rear support bearing.

of the bearing.

3. Inspection of the support bearin g. a) Rotate the bearing by hand, appl ying force in the direction of rotation. Make sure the bearing moves smoot hly without binding.

b) Make sure the oil seals are not damaged .

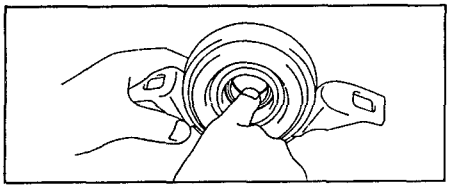

4. Replace the dust boot.

a) Using a screwdriver and hammer, remove the dust boot.

b) Install the new dust boot as shown i n the illustration. Not

e: do not damage the dust boot.

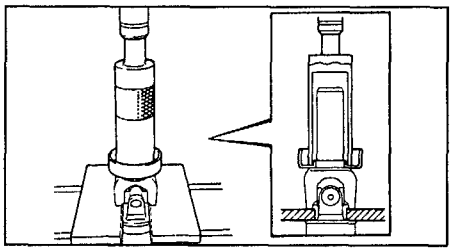

Assembly

1. Install the front support bearing.

ing.

a) Install the support bearings on the inte rmediate shaft as shown in the illustratio n.

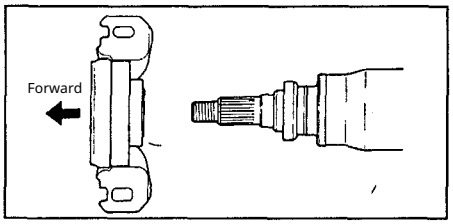

Front support bearing.

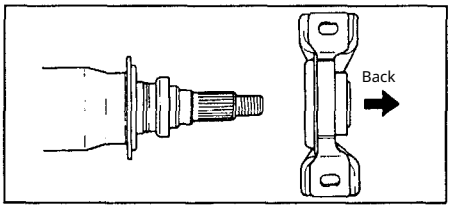

Rear support bearing.

b) Install the thrust washer. c) Align th e alignment marks on the flange and sh aft and install the flange. d) While hold ing the flange, install the bearing in pla ce and secure it with a new nut and was her. Torque tightening e)

Loosen the nut. ..... 185 N·m

e) Tighten the nut again.

Torque specification ..... 70 N·m

g) Using a hammer and chisel, secur e the nut.

2. Install the rear support bearing.

ing.

Note: Install the rear support bearing in the same way as the front. Installation

1. Connect the intermediate and rear propeller shafts. Using a socket wrenc h, temporarily tighten the six bolts wit h the three washers. Note: Plac e a rag as shown in the illustration to a void damaging the rubber seal.

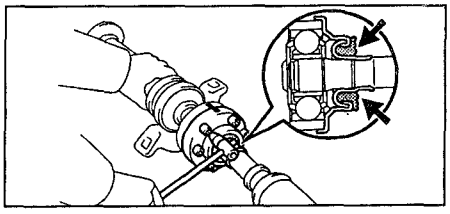

2. Install the intermediate and rear pro peller shaft assembly and secure the su pport bearings with bolts. 3. Attac h the flange of the rear propeller shaft t o the flange of the final drive.

a) Align the installation marks on the fl anges and connect the shaft, securing i t with four bolts, washers, and nuts.

b) Tighten the bolts and nuts.

Tightening torque..... ..... 74 N·m

4. Install the front propeller shaft.

a) Remove the plug from the transfer case.

b) Install the shaft into the transfer case.

c) Align the alignment marks on the flanges and tighten the mounting bolts with washers and nuts.

Tightening torque.. ..... 37 N·m

5. Tighten the mounting bolts of the universal joint coupling.

a) Press and hold the brake pedal.

b) Using a socket wrench, tighten the mounting bolts of the universal joint coupling.

Tightening torque.... ..... 27 N·m

5. Adjust the position of the support bearing s.

a) On an unloaded vehicle, adjust the di stance between the rear side of the cou pling and the driveshaft as shown in the illustration.

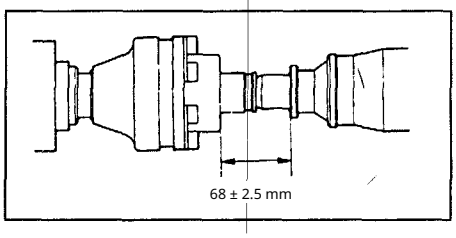

b) On an unloaded vehicle, adjust the posi tion of the support bearings as shown in t he illustration and then tighten the bearin g mounting bolts to the body. Tightening t orque..... 37 N·m

.....

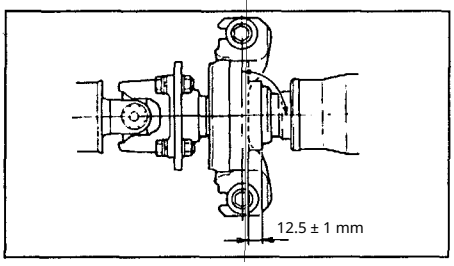

Front support bearing.

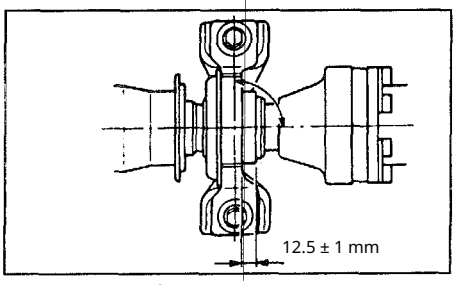

Rear support bearing.

c) Ensure that the center line of the brack et is perpendicular to the axis of the prop eller shaft.

Rear axle differential

Replacement

front oil seal

1. Disconnect the driveshaft from the differe ntial.

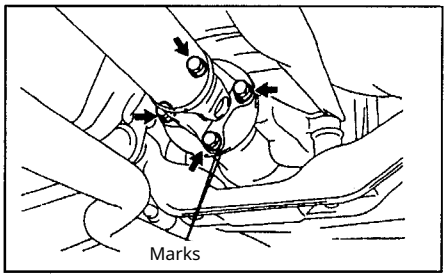

2. Remove the coupling flange.
a) Unlock the nut.

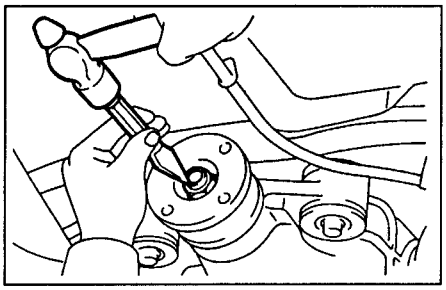

b) While holding the flange, unscrew the nut.

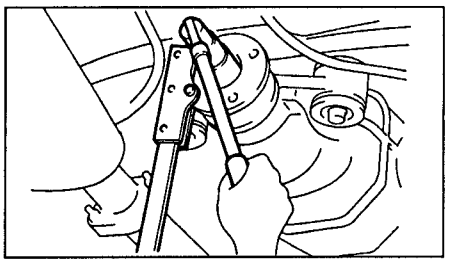

c) Using a puller, remove the coupling flange.

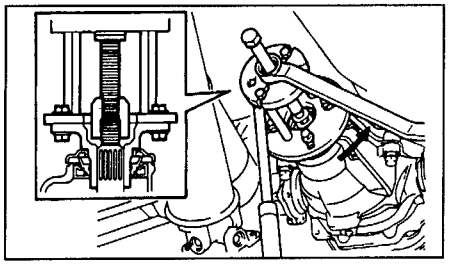

3. Remove the front oil seal and oil deflector.

a) Using a puller, remove
Install the oil seal.
b) Remove the oil deflector.

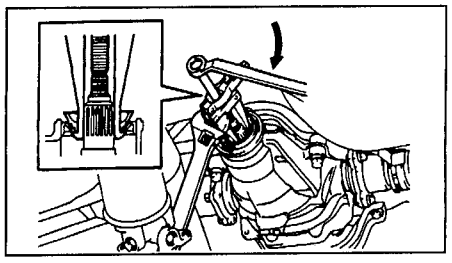

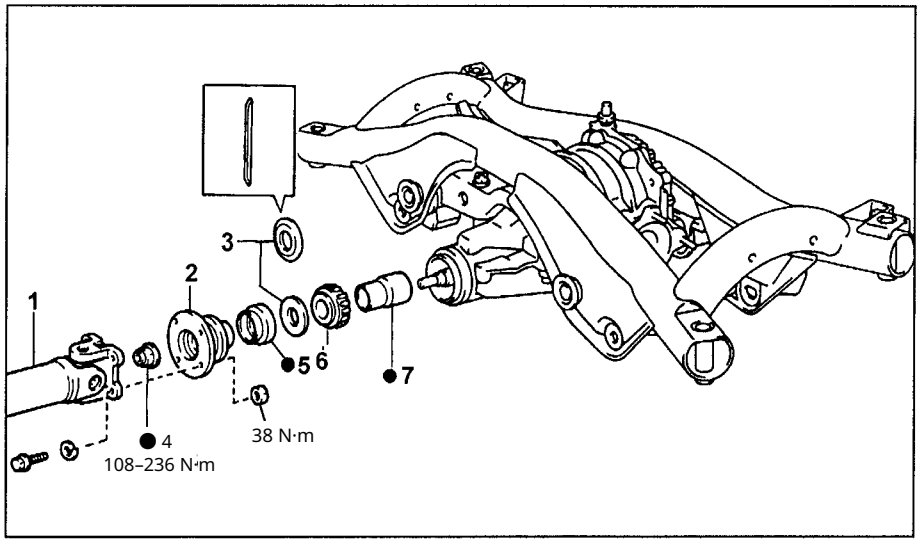

Front oil seal replacement. 1 - driveshaft, 2 - coupling flange, 3 - oil deflector, 4 - fla nge retaining nut, 5 - oil seal, 6 - front bearing, 7 - bearing spacer sleeve.

4. Remove the front bearing and support bushing.
a) Using a puller, remove the front be aring.

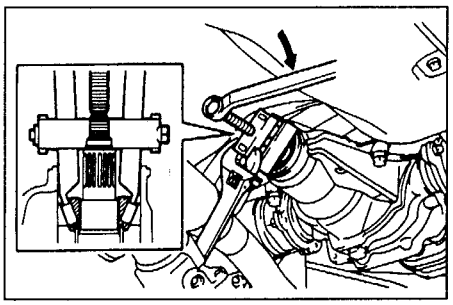

b) Remove the spacer sleeve. 5. Ins tall a new spacer sleeve, front bearing and oil deflector.
Oil deflector.
a) Install the new spacer sleeve and oil def lector as shown in the illustration.

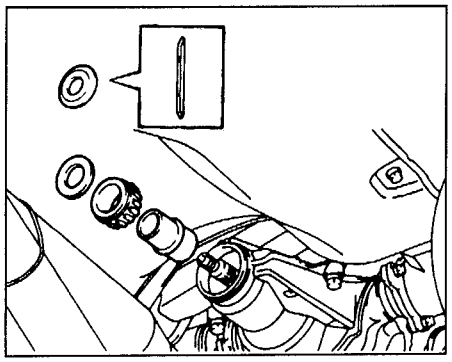

b) Install the front bearing
onto the shaft.
8. Install the new oil seal.
a) Apply grease to the sealing lip of the oil seal.
b) Using a driver, install the new oil seal.

Installation depth
of the oil seal..... ..... 2.0±0.3 mm

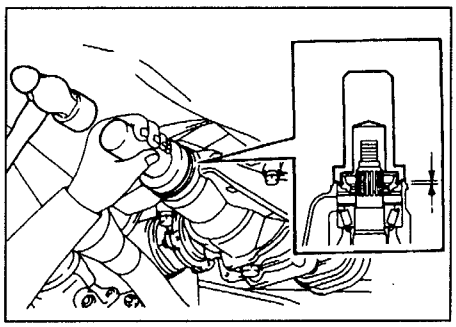

8. Install the coupling flange. a) Using a special tool, install the flange on the s haft.

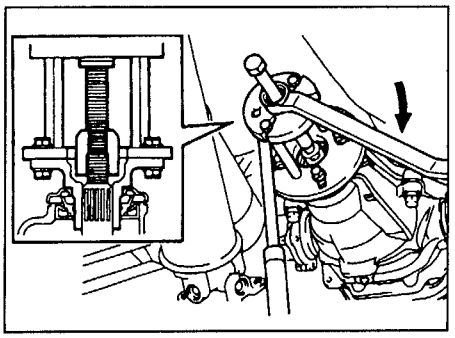

b) Apply grease to the thread of the new n ut.
c) While holding the flange, tighten the nut.
Tightening torque.....
108 N·m

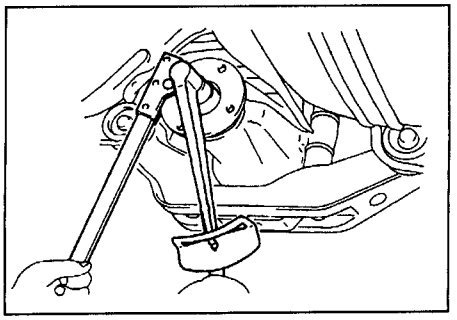

g) Using a torque wrench, measure th e preload (breakaway torque) of the drive gear roller bearing of the final d rive.

Preload:
new bearing .....0.98 - 1.57 N·m

used bearing ..... 0.49 - 0.78 N·m If the preload is greater than permitted, replace the spacer sleeve. If the preload is less t han the permissible value, further tighten t he nut by the specified tightening incremen t until the preload reaches the specified val ue.

Nutation (tightening) increment of the nut..... .5–10°

If the preload exceeds the maximum al lowable value during additional tighten ing of the nut, replace the spacer sleev e and repeat the adjustment procedur e. Note: do not adjust the preload by loos ening the nut. Maximum allowa ble tightening torque of the flange f astening nut

..... 240 N·m

9. Using a hammer and chisel, lock the nut. Reconnect the driveshaft and tighten the mounting bolts. Bolt tightening tor que..... 38 N·m 10. Fill the final drive wit h oil.

Replacement of drive shaft oil seals Removal

1. Disconnect the drive shaft. a) Apply marks to the drive shaft and to the output shaft of the differe ntial. Note: do not make alignment mar ks with a sharp object. b) With the par king brake lever engaged, loosen the nuts, remove the washers, and discon nect the drive shaft from the different ial output shaft. c) Secure the drive shaft.

2. Fasten the special tool with nuts to the differe ntial output shaft and remove the shaft.

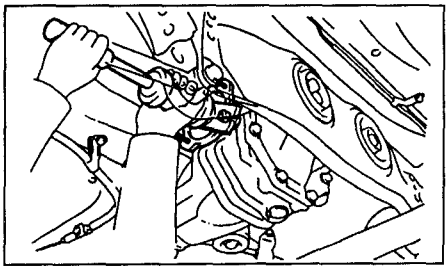

3. Remove the oil seal.

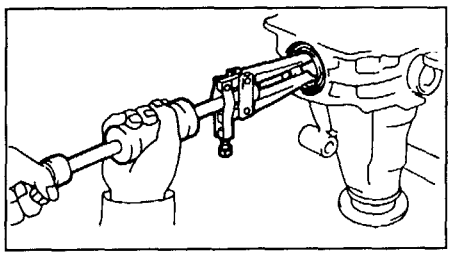

5. Replace the dust boots.

a) Wrap the shaft with a cloth and clamp it— then clamp it in a vise.

b) Using a screwdriver, remove dust cover.

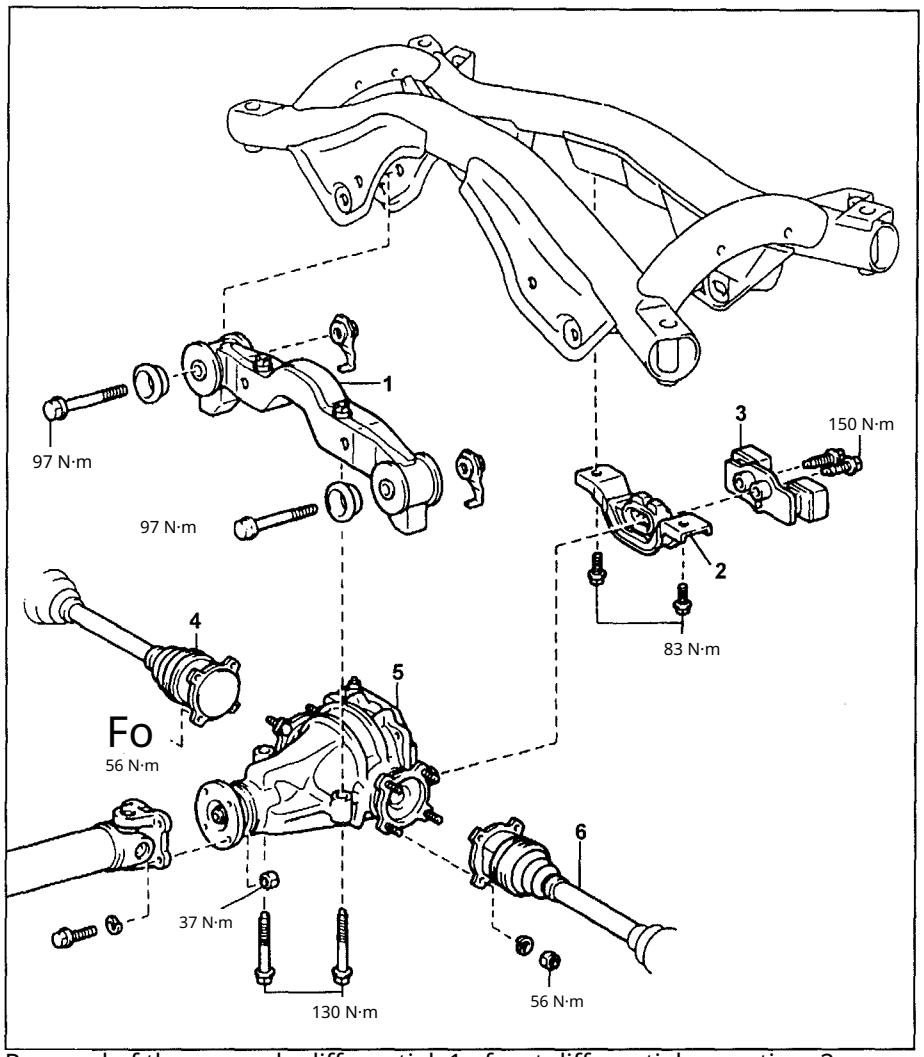

Removal of the rear axle differential. 1 - front differential mounting, 2 - rear differential mounting, 3 - damper (models with manual transmission), 4 - rig ht drive shaft, 5 - rear axle differential assembly, 6 - left drive shaft.

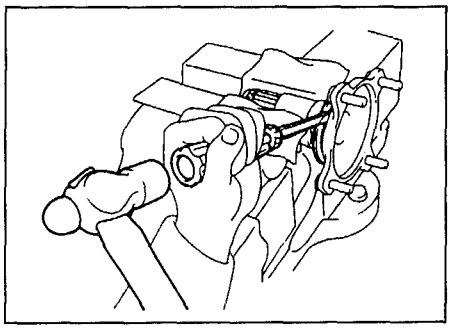

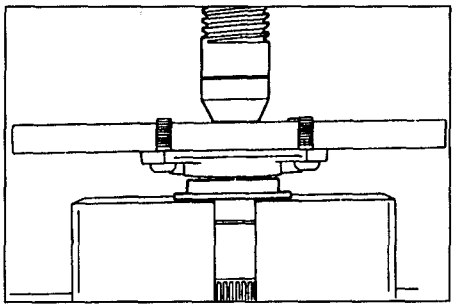

c) Using screwdrivers, remove the retaining ring.

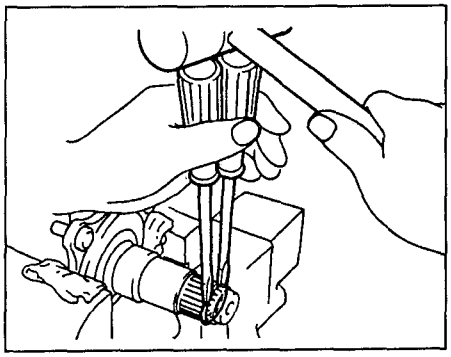

g) Press a new dust boot onto the redu cer output shaft.

1. Install the new oil seal. a) Pr ess the new oil seal flush with the surf ace of the crankcase.

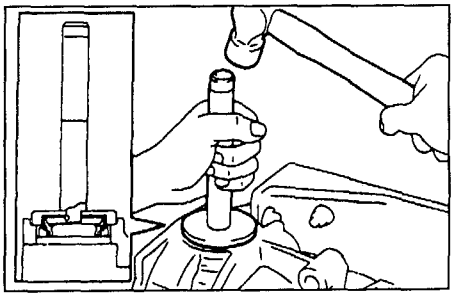

b) Apply grease (consistency grease) to the working edge of the oil seal.

2. Install the reducer output shaft. a) Fit a new retaining ring onto the reducer output shaft.

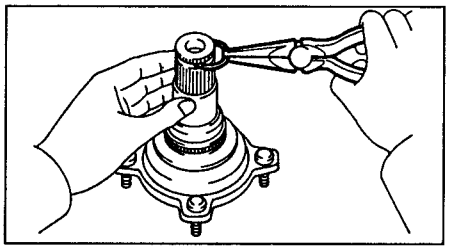

b) Apply grease (consistency grease) onto the retaining ring.
c) Secure the special tool with a nut (bolt) and install the output shaft int o the differential.

Note: the split of the retaining ring must be facing downward.

3. Install the drive shafts.
a) Align the marks and secure the drive s hafts with four nuts with washers.

Tightening torque.... ..... 56 N·m

4. Fill the reducer with transmission oil.

Removal and installation of the reducer

Note: installation is performed in the re verse order of removal.

1. Disconnect the driveshaft from the rear a xle reducer.
a) Apply marks to the flanges.

Note: do not apply installe- make marks with a sharp object.

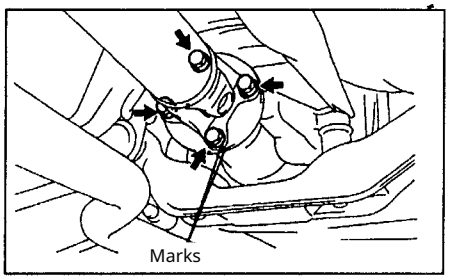

b) Unscrew the four bolts and nuts and disconnect the driveshaft.
c) Secure the driveshaft to the vehicle body with wire.

2. Disconnect the left and right drive shafts of the rear axle differential.

Disconnect the left and right drive shafts of the rear axle differential.
a) Mark the drive shafts and the output shaft of the differential.

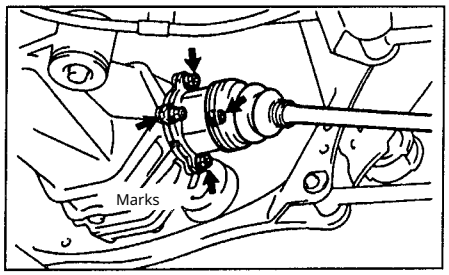

b) Tighten the parking brake lever, loosen the four nuts, and remove the drive shafts.

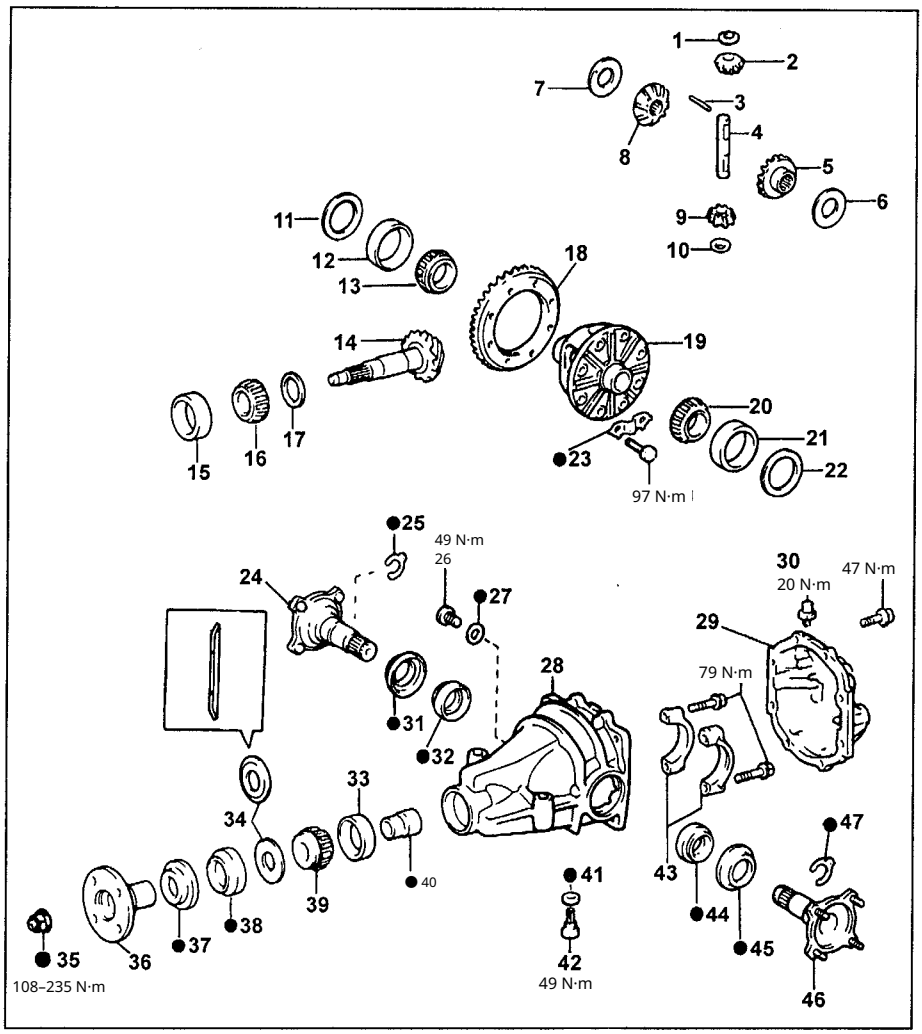

Disassembly of the differential. 1, 10 thrust washer, 2, 9 satellite gear, 3 pin, 4 - satellite shaft, 5, 8 - half-axle gear, 6, 7 - half-axle washer, 11, 22 - washer, 12, 21 - outer bearing race, 13, 20 - side bearing of the differential cup, 14 - drive gear, 15 - outer bearing race, 16 - rear bearing, 17 - plate washer, 18 - driven gear, 19 - differential cup, 23 - locking plate, 24, 46 - differential output shaft, 25, 47 - retaining ring, 26 - filler plug, 27 - gasket, 28 - rear axle reduction housing, 29 - reduction housing cover, 30 - breather, 31, 45 - dust cover, 32 - oil seal, 33 - outer bearing race, 34 - oil deflector, 35 - nut, 36 - coupling flange, 37 - dust boot, 38 - oil seal, 39 - front bearing, 40 - bearing spacer sleeve, 41 - gasket, 42 - drain plug, 43 - side bearing cover, 44 - oil seal.

3. Remove the rear axle differential.
a) Position the jack under the differential.

b) Unscrew the bolts securing the different ial to the rear mounts. Tighte ning torque. ..... 150 N·m

c) Unscrew the two bolts, remove the fro nt mount washers, and remove the rear a xle differential from the vehicle.

Tightening torque 130 N·m.....

Note: do not damage the drive shafts.

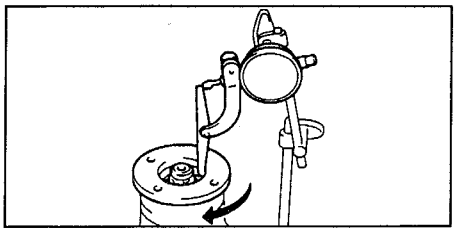

2. Measure the axial runout of the flange as shown in the figure.
Maximum allowable runout .. .. 0.1 mm

Checking runout of the co upling flange c) To avoid damaging the drive 1. Install the indicator as shown in the shaft, attach it to the body with a wi re figure and measure the radial as shown in the figure and measure the radial runout of the coupling flange. runout of the coupling flange. Note: do not damage the joint boots. Maximum allo wable runout 0.1 mm

.....

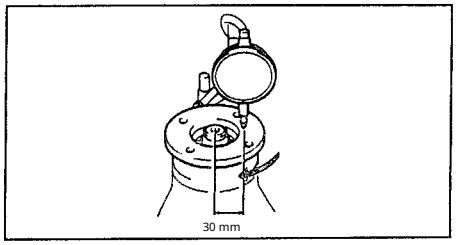

Drive Shafts

Removal of the front drive shafts

1. Jack up the vehicle and remove the front wheel.
2. Unscrew the drive mounting nut- to the hub.
   a) Remove cotter pin and cap locknuts.
   b) Unscrew the nut while the pedal is depressed— gave the brakes.

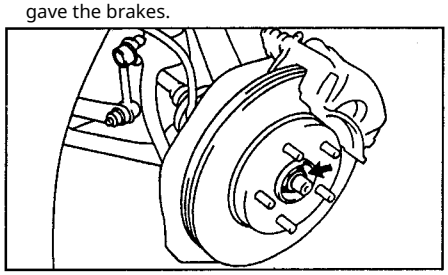

3. (Models with ABS)
Remove the speed sensor.

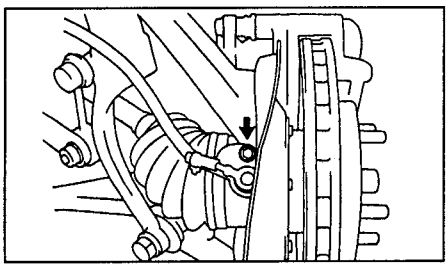

4. Remove the engine protection covers.
5. Drain the oil from the gearbox (transfer case).
6. Disconnect the steering tie rod end Tie rods.
   a) Remove the cotter pin and unsc rew the nut. b) Using a puller, disc onnect the tie rod end from the ste ering knuckle.

Note: do not damage the dust boot.

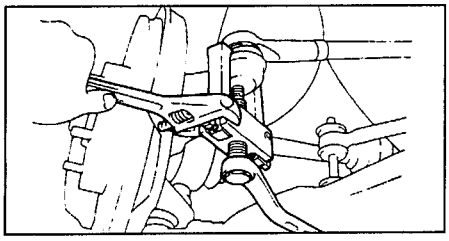

7. Disconnect the stabilizer strut. 8. Disc onnect the lower ball joint from the low er control arm.
9. Using a plastic hammer, disconnect the d rive shaft from the hub. 10. Remove the hu b assembly together with the drive shaft.

Note: be careful not to damage the drive shaft boot and the hub oil seal.

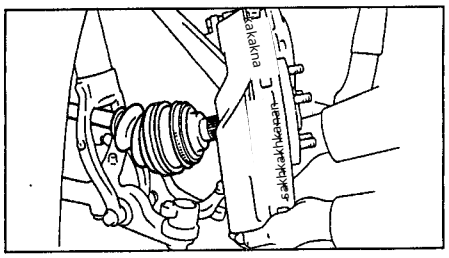

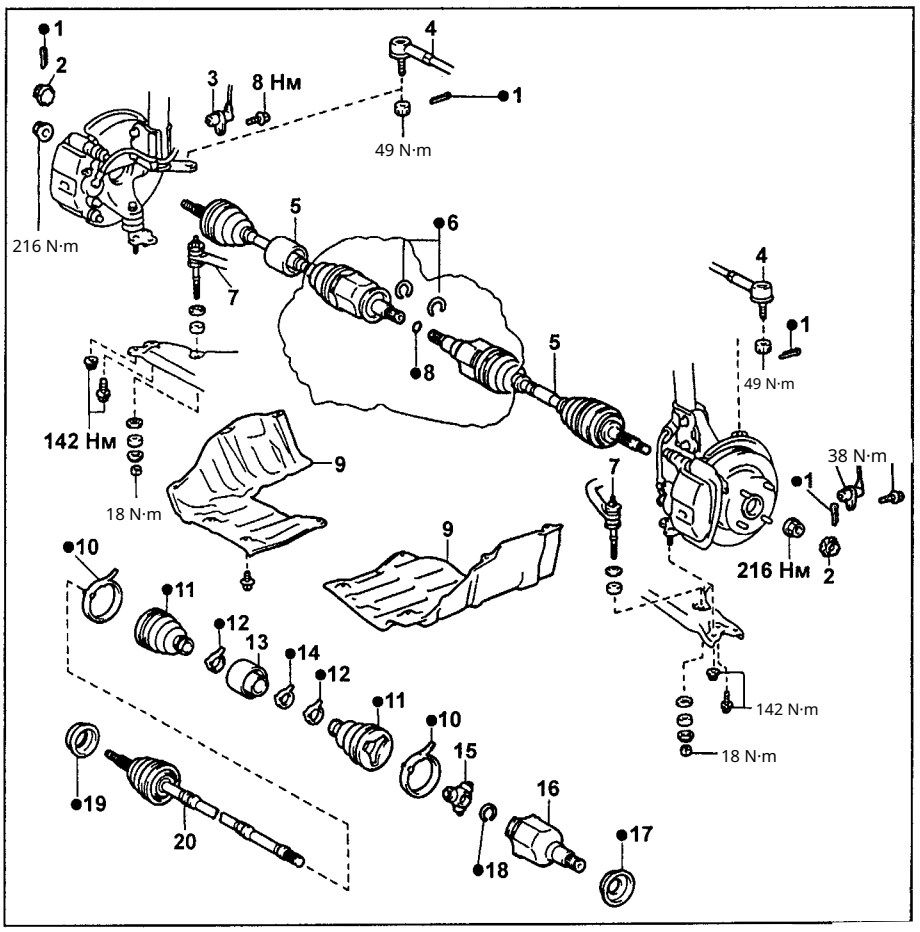

Front drive shafts removal (models up to 1996). 1 - cotter pin, 2 - locknut ca p, 3 - speed sensor (models with ABS), 4 - tie rod end, 5 - right drive shaft, 6 - retaining ring, 7 - stabilizer, 8 - oil seal (right drive shaft), 9 - engine splas h shield, 10 - clamp, 11 - protective cover, 12 - clamp, 13 - damper, 14 - cla mp, 15 - tripode joint, 16 - inner joint cage, 17 - inner joint, 18 - retaining rin g, 19 - outer joint dust boot, 20 - drive shaft with outer joint. - dust boot

9. Remove the left drive shaft.
Note: do not damage the oil seal.

a) (Manual transmission models)
Using a hammer and drift, remove the d rive shaft.

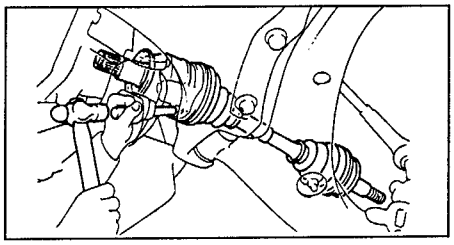

6) (Models with automatic transmission)
Remove the drive shaft using a screwdrive r, as shown in the illustration.

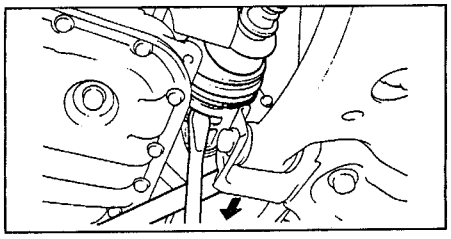

10. (Models up to 1996)
Remove the right drive shaft.
   a) Using a hammer and drift, remove th e drive shaft. Note: do not damage the oil seal.

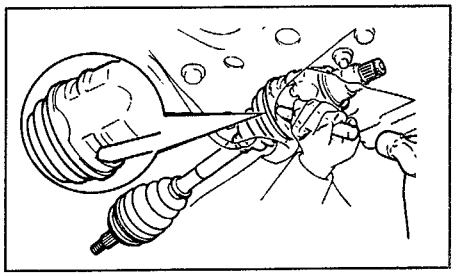

   b) Remove the circlip seal.
11. (Models from 1996)
Remove the right drive shaft.
   a) (4A-FE)
   C Using a hammer and a drift punch, remo ve the drive shaft.
   б) *(4A-GE)*
   Unscrew the two mounting bolts of the center bearing. Remove the drive shaft.

Note: do not damage the oil seal.

12. The hub bearing may be damaged if it is subjected to the weight of the vehicle, f or example when moving the vehicle with the drive shaft removed. Therefore, if it is necessary to move the vehicle with the dri ve shaft removed, first secure the hub bea ring as shown in the illustration.

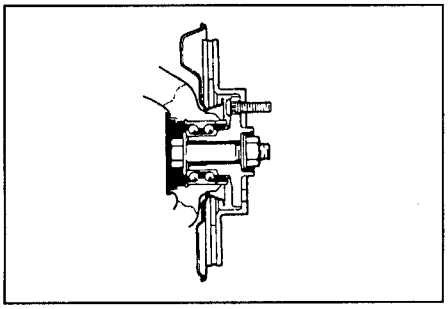

Disassembly of the front drive shafts

1. (Models up to 1996)
Remove the inner joint boots.
2. (Models from 1996)
Remove the inner joint boots.

a) (Tun 1)
Remove the clamp No. 2.

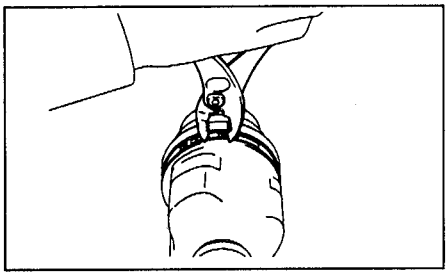

б) *(Тип 1)*
Compress the loop of clamp No. 1 and remove the clamp.

3. Remove the triple joint.

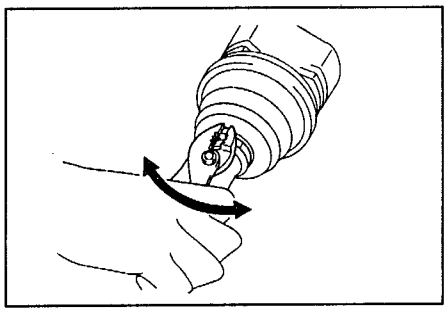

c) (Type 2)
Remove the clamps and boots as shown i n the illustration.

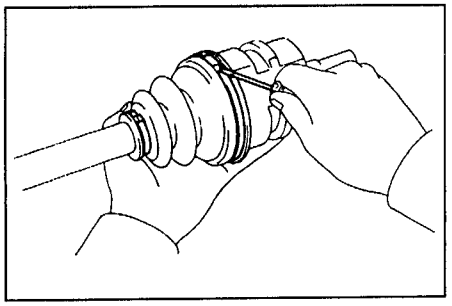

2. Remove the inner drive shaft bearing race) joint.

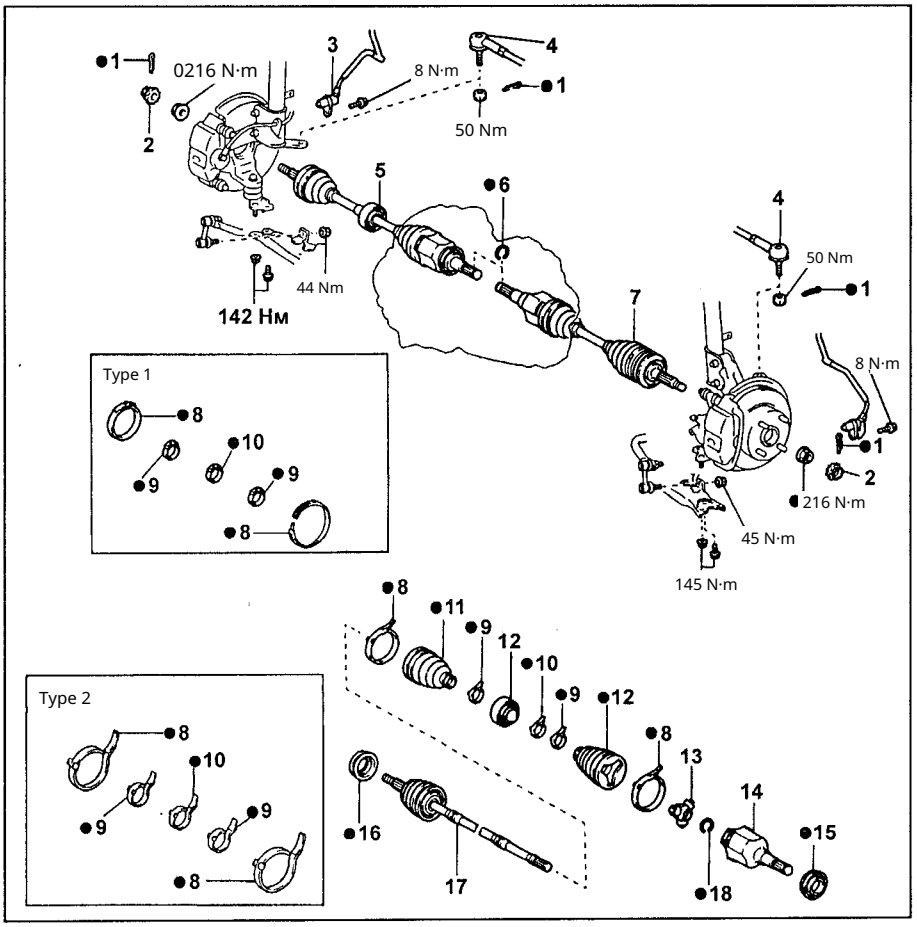

Removal of front drive shafts (models from 1996, 4A-FE engine). 1 - cotter pin, 2 - locknut cap, 3 - speed sensor, 4 - tie rod end, 5 - right drive shaft assembly , 6 - snap ring, 7 - left drive shaft, 8, 9 - clamp, 10 - clamp (right drive shaft), 11 , 12 - protective boot, 13 - triple joint, 14 - inner joint housing, 15 - inner joint dust boot, 16 - outer joint dust boot, 17 - drive shaft, 18 - snap ring.

a) Remove the circlip.

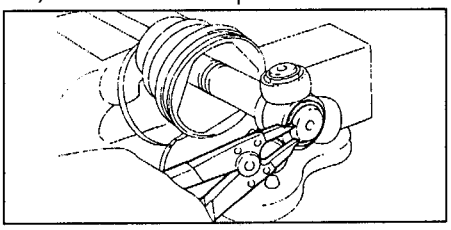

b) Align the marks on the tripod joint and the shaft.
c) Using a drift punch and a hammer, re move the tripod joint.

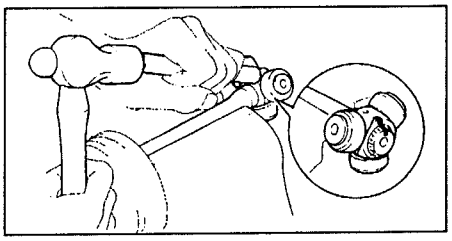

4. Remove the protective boot of the inner joi nt and the clamp.
5. (Right drive shaft, models up to 1996 2.)

Remove the damper.

6. (Models from 1996, 4A-FE, right

Remove the damper.

a) (Type 1)
Remove damper clamp No. 2 as shown i n the illustration.

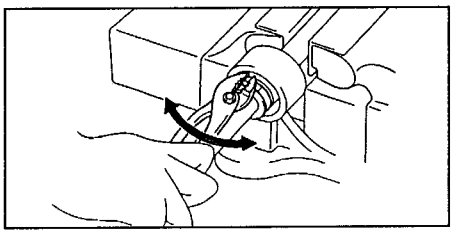

c) (Type 2)
Remove the damper clamp.

7. Remove the protective boot of the outer joi nt.

Replacement of the inn er joint boot

1. Clamp the inner joint housing in a vise with so ft jaws. 2. Use a screwdriver and a hamme r to remove the dust boot.

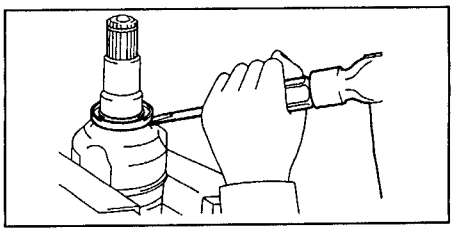

3. Press in the new dust boot.
Note: Do not damage the dust boot during i nstallation.

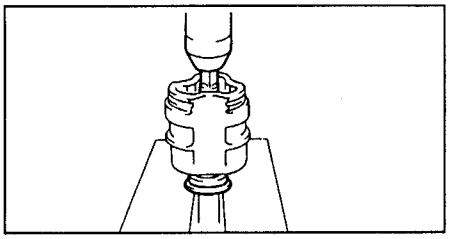

Replacement of the boot
of the outer joint

Note: replacement of the boot
The replacement of the outer boot of the f ront drive shaft is similar to the replaceme nt of the outer boot of the rear drive shaft.

1. Secure the outer joint cage in a vise wit h soft jaws. 2. Using a screwdriver a nd a hammer
remove the dust boot.

Note: for models with ABS do not remove th e boot from the inner side of the wheel spee d sensor rotor.

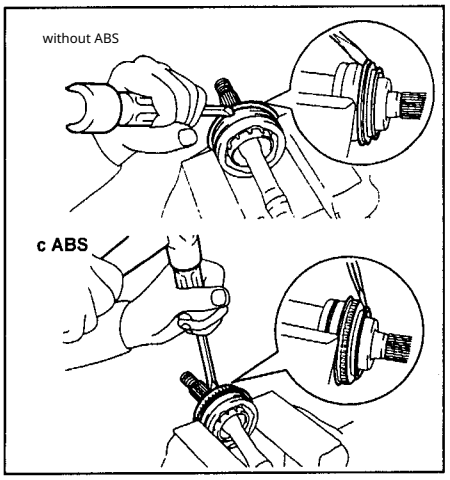

3. Press in the new dust boot. Note: pres s the dust boot in so that the joint between the dus t boot and the surface of the outer race is sealed as indicated by the arrow in the i llustration.

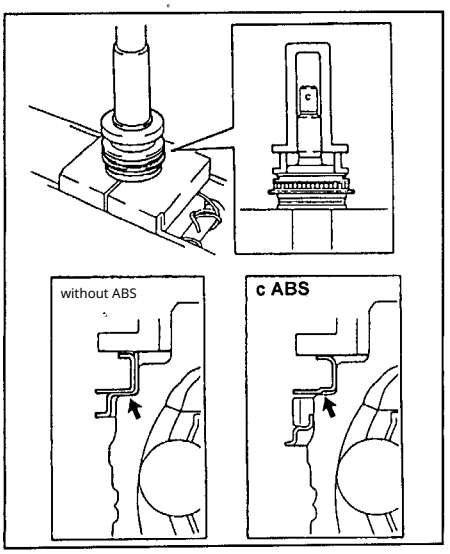

Models up to 1996.

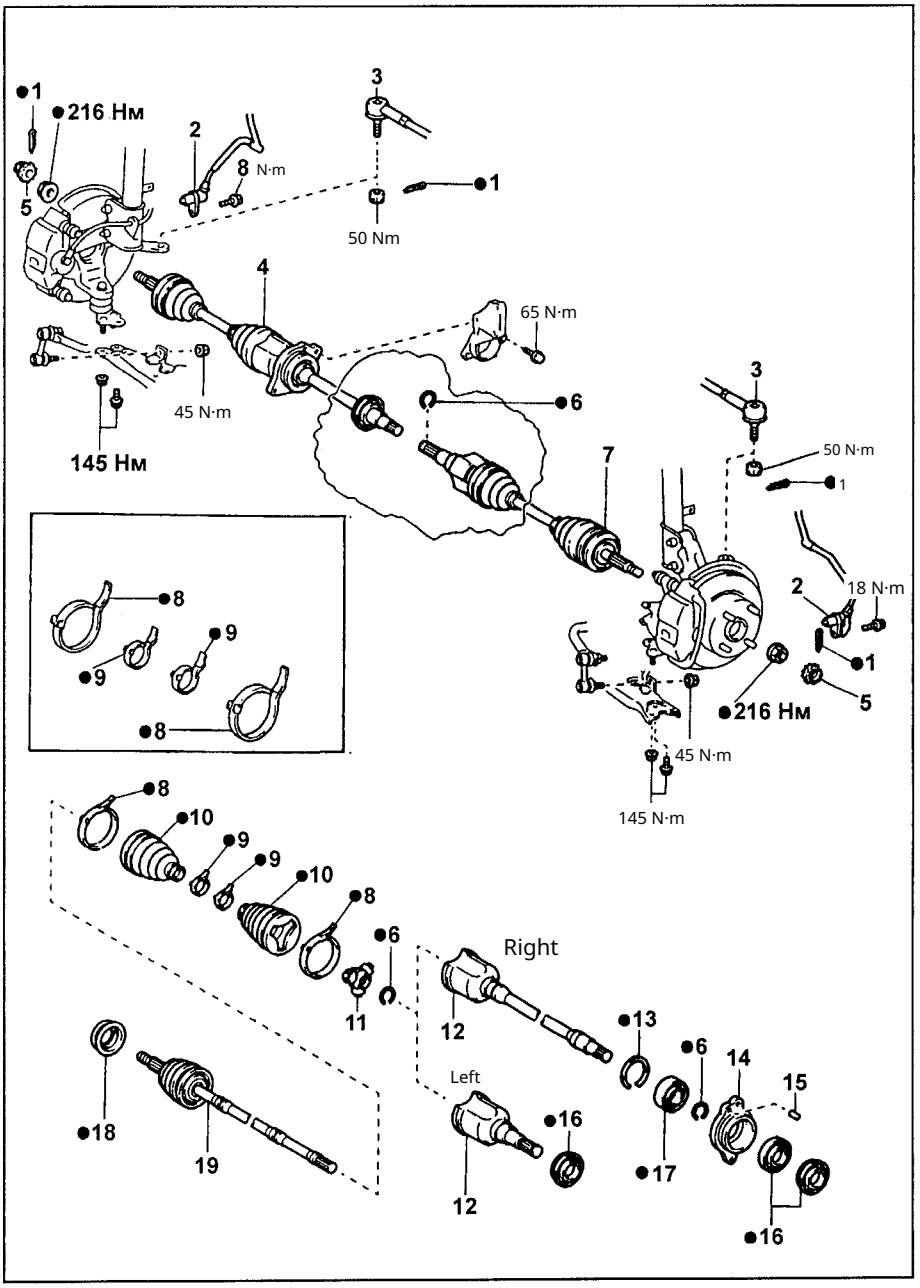

Removal of front drive shafts (models from 1996, 4A-GE engine). 2 - cotter pin, 3 - w h - eel spee d sensor, 4 - outer tie rod end, 4 - right drive shaft, 5 - cap of the l ock nut, 6 - snap ring, 7 - left drive shaft, 8, 9 - clamp, 10 - protective cover, 11 - tripo de joint, 12 - inner joint race of the right drive shaft, 13 - snap ring, 14 - bearing reta iner, 15 - pin, 16 - inner joint dust boot, 17 - bearing, 18 - outer joint dust boot, 19 - drive shaft with outer joint.

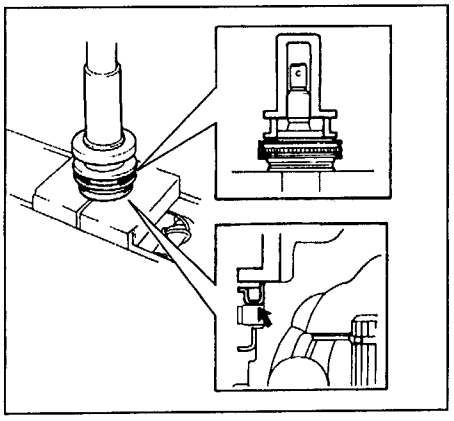

Models from 1996.

Replacement
central bearing
(models from 1996, 4A-GE)
1. Remove the dust boot (from the tran sfer case side).

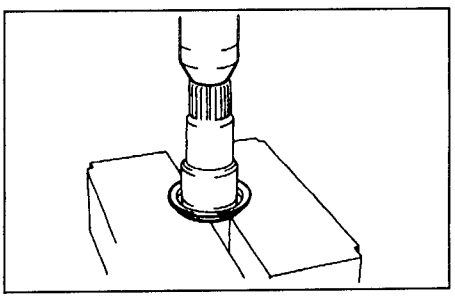

2. Remove the bearing retainer.
a) Remove the snap ring.
b) Remove the bearing.

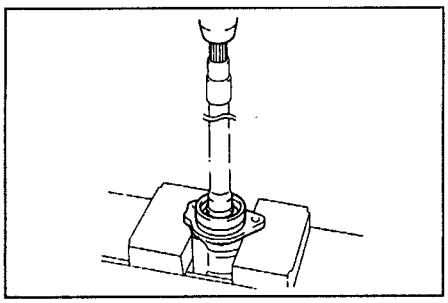

3. Remove the dust cover (from the beari ng side).

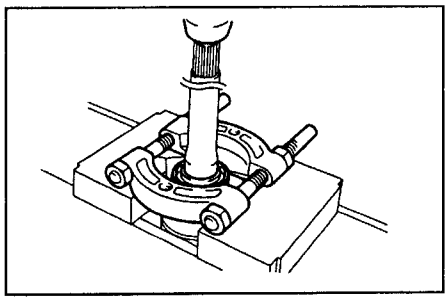

4. Remove the bearing.
a) Remove the snap ring.
б) Remove the bearing.

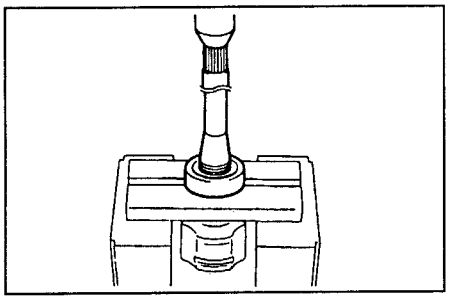

c) Remove the snap ring.

5. Install the bearing.
a) Press a new bearing into the bearing holder.

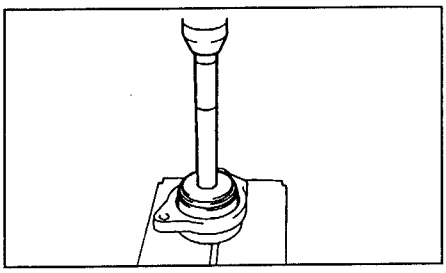

b) Install the new retaining ring.
c) Press the bearing assembly with the h older into the inner joint race.

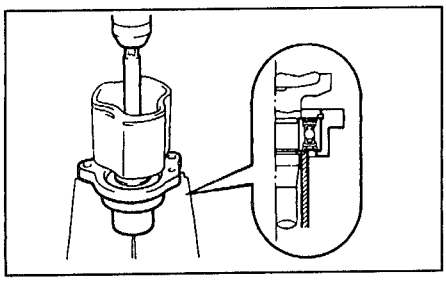

6. Install the new snap ring. 7. Press in the new dust boot from the bearing side.

Bearing installation depth..... 1 mm

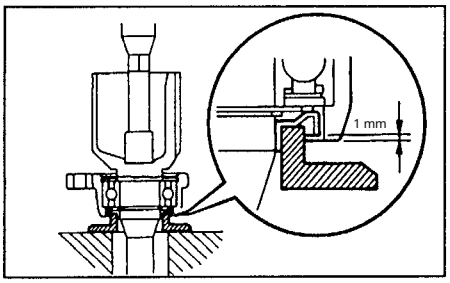

8. Press the new dust boot in from t he transfer case side, as shown in th e illustration.

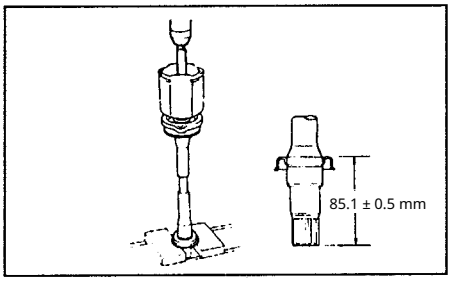

Assembly of front drive shafts

1. Install the protective covers and Da mper (right drive shaft). Note: wr ap the shaft splines with insulating ta pe to avoid damage covers.
2. Install the triple joint.
3. Install the outer race into the inner- of the front joint.
Note: apply a consistent/grease-like lubric ant to the hinge bearing.
Amount of lubricant:
models up to 1996... ..... 180 - 190 г
models from 1996, Type 1 ..... 190 - 207 g
models from 1996, Type 2..... 180 - 190 g
4. Install the protective covers of the inner j oint and secure them with clamps.

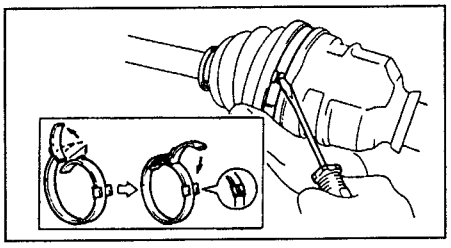

5. Install the outer joint protective boots and secure them with clamps. a) Install the outer joint protective boots.

Note: Apply grease of the specified consistenc y into the joint boot.
Amount of lubricant:
Models up to 1996. ..... 100 - 110 г
Models from 1996, 4A-FE:
Type 1 ..... 165 - 185 г
Type 2:
(inner side of the joint) 30–35 2
(from the boot side) 70–752
Models from 1996, 4A-GE..... 120 - 130 g

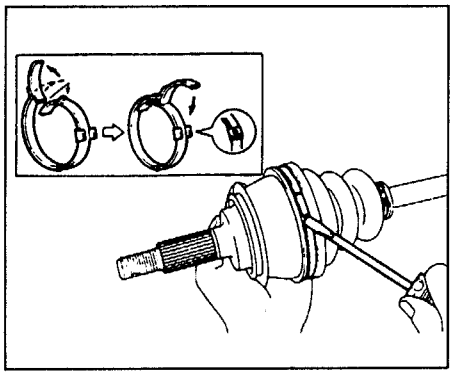

6) (Models from 1996, Type 1)
Measure the clearances in the clamp hinges.
Nominal clearance:
Clamp No. 1 ..... 1.4 - 2.15 mm
Clamp No. 2 ..... 1.2 - 2.6 mm

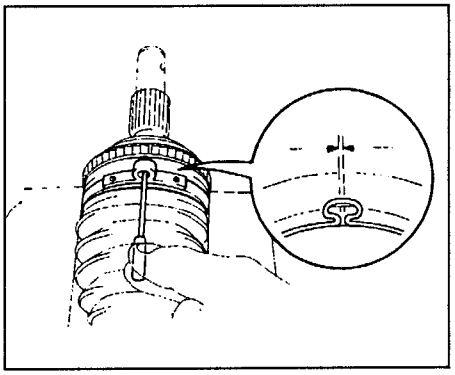

If the gap is larger than specified, then re-ins tall the clamp.

6. Install the right-side damper of the water shaft.
a) Install the damper into the groove shaft.
installation control.
Distance A:
models up to 1996 ..... 205 мм
models from 1996 ..... 428 - 434 mm

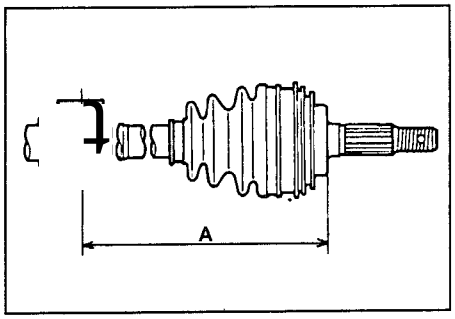

6) (Except for 1996 models, Type 1)
Install the clamp.

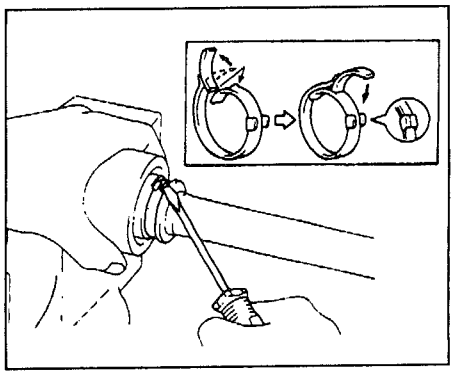

c) (1996 models, Type 1)
Install the clamp. Measure the clearance in the clamp loop.

Nominal clearance.... not more than 1.5 mm

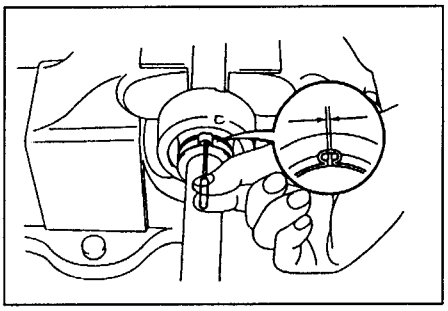

7. Check the drive shaft.
a) Make sure there is no play in the outer joint.
6) Ensure that the inner joint slides smoothly in the axial direction.

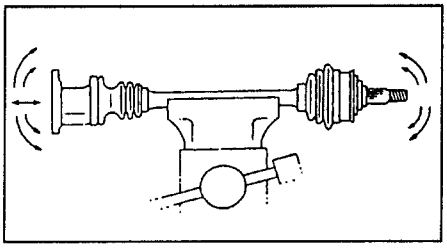

c) Make sure there is no noticeable radial play in the inner joint.
g) Check the integrity of the protective boots.

Installation of front drive shafts

1. Install the left drive shaft assembly.
a) Lubricate the splines of the drive shaft with transmission oil. b) Install the drive shaft. Note: Orient the split of the retaining ring f acing downward. Do not damage Install the oil seal.

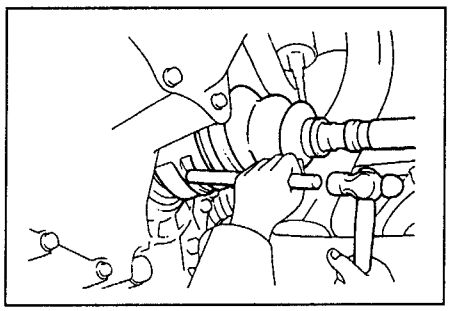

2. Install the right drive shaft. Note: Ori ent the split of the retaining ring facing d ownward. Do not damage Install the oil seal.
3. Install the drive shaft into the hub. 4. Co nnect the lower ball joint to the lower arm.

5. Connect the stabilizer strut to the lower a rm.
6. Connect the tie rod end to the steerin g knuckle. Tighten the nut and install th e cotter pin.
7. (Models with ABS)
Install the speed sensor.
8. Refill the transmission with transmission oil

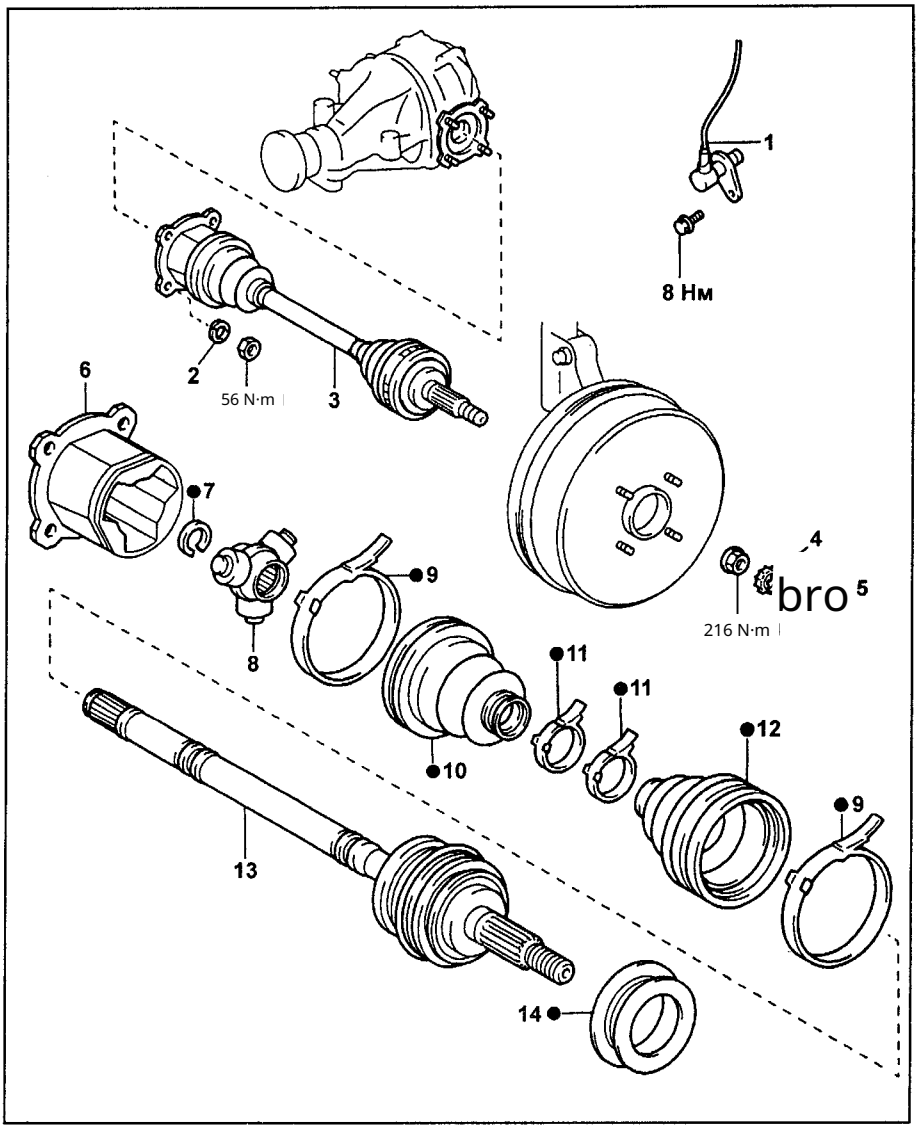

Removal of the rear drive shafts. 1 Rear left wheel speed sensor (models wit h ABS), 2 - spring washer, 3 - drive shaft (assembly), 4 - locknut cap, 5 - cotte r pin, 6 - inner joint race, 7 - retaining ring, 8 - tripod joint, 9, 11 - clamp, 10, 12 - protective boot, 13 - drive shaft, 14 - outer joint dust boot.

the transmission (transfer case) and ch eck the level.
9. Install the protective covers of the engine manufacturer.
10. Tighten the nut securing the drive shaft to the hub (with the brake pedal depresse d). Install the locknut cap and cotter pin. To rque for the nut.. 11. Install t he wheel. Tightening torqu ..... le when moving the vehicle with the drive shaft remo e.
..... 103 N·m
12. Check the wheel alignment angles the wheels.

Removal of the rea r drive shafts

1. Remove the rear wheel. 2. Unscrew the nut securing the drive shaft to the hub.
a) Remove th cotter pin and cap e lock nuts.
b) Unscrew the nut while the brake peda l is depressed.
3. (Models with ABS)
Remove the speed sensor.

4. Remove the drive shafts. N ote: when removing the shaft, do not d amage the teeth of the speed sensor ro tor on the outer joint of the drive shaft or the hub oil seal.

5. The hub bearing may be damaged if the weight of the vehicle acts on it, for examp le when moving the vehicle with the drive shaft remo ved. Therefore, if it is necessary to move t he vehicle with the drive shaft removed, fir st secure the hub bearing as shown in the illustration.

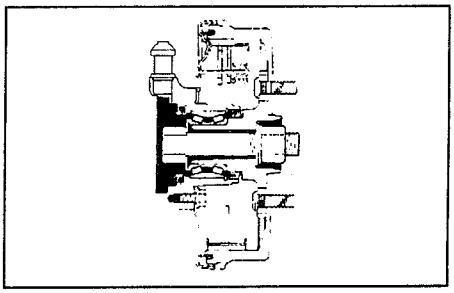

Disassembly of rear drive shafts

1. Remove the inner joint boot. 2. Separate th e inner joint outer race after first making align ment marks on the outer race and the drive s haft.

Note: do not make alignment marks with a sharp object. 3. Remove the tripode joint.

a) Remove the circlip.

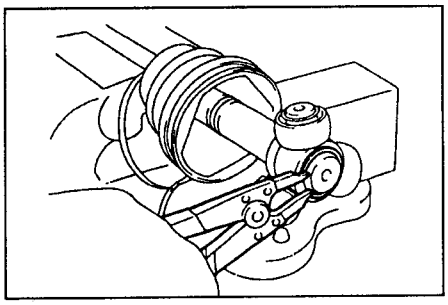

b) Apply alignment marks to the drive s haft and the tripod joint. Note: Do n ot make alignment marks with a sharp in strument.

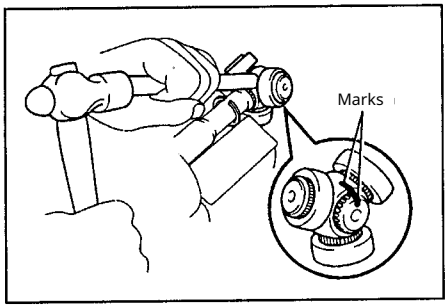

c) Using a copper drift and a hammer, remove the tripod joint from the drive shaft.

Caution: Do not drop the joint during removal.

5. Remove the outer joint boot.

Rear drive shafts assembly

1. Install protective boots on the outer and inner joints. Note: wrap the shaft splines with electrical tape to avoid damag e.

covers.

2. Install the triple joint.

3. Install the outer race of the inner joint.

Note: apply grease of the specified consistency into the joint race. I nstallation of rear drive shafts 1. Install the drive shaft. 1. Install the drive shaft. Amount of greas e: 180 - 190 2. .....

4. Install the protective boot of the inner jo int and secure it with clamps.

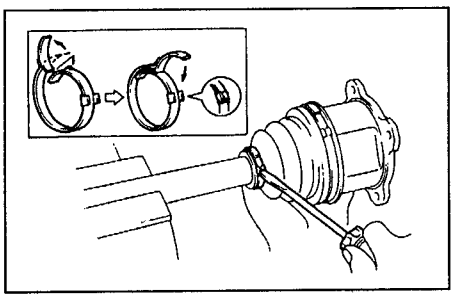

5. Install the outer joint protective boot.

Note: Pack the joint boot with grease. Amou nt of grease.

..... 100 - 110 a

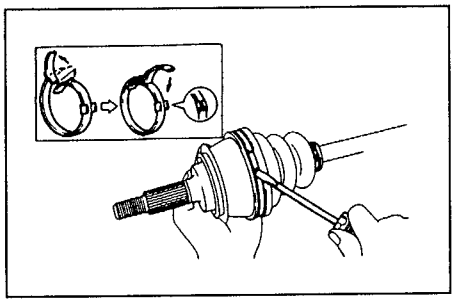

6. Inspect the drive shaft. a) E nsure there is no play in the outer join t.

b) Ensure the inner joint slides smoothly in the axial direction.

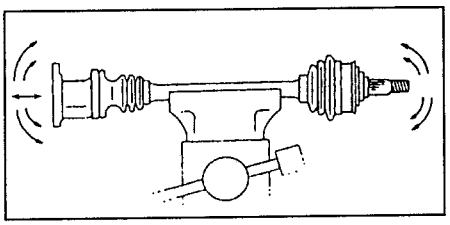

c) Make sure there is no noticeable radial play in the inner joint.

g) Check the integrity of the protective boots.

a) Install the drive shaft into the wheel hub.

Note: Do not damage the drive shaft b oots or the hub oil seal.

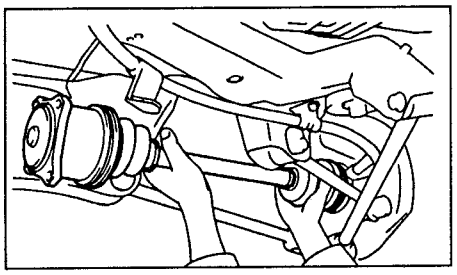

b) Align the alignment marks on the reduce r output shaft and the drive shaft.

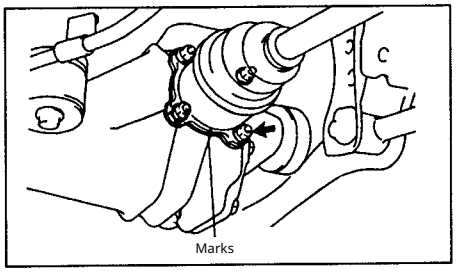

2. (Models with ABS)
Install the speed sensor.

3. Tighten the nut.

a) Tighten the nut securing the drive shaft to the hub (with the brake pedal depressed).

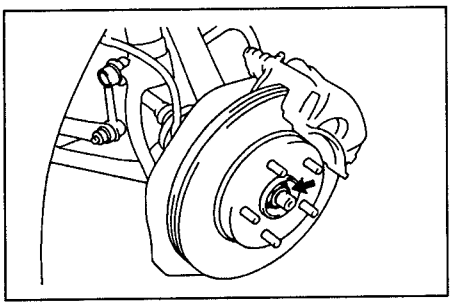

b) Install the cotter pin and the castle nut cap.

4. Install the wheel. Bolt tightening torque

..... 103 N·m

Suspension

Preliminary inspections

1. Check the amount of tire wear and Tire pressure when cold.

Tire pressure:

185/65 R14 86S, 175/65R14 82S..... 210 kPa
185/60 R14 82H ..... 220 kPa

2. Check wheel runout.

Runout.... ..... less than 3.0 mm

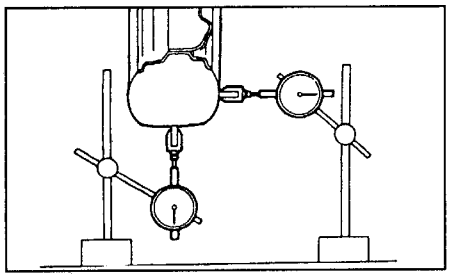

3. Check the axial clearance of the hub bearings.
4. Check the security of suspension component fastenings.
5. Check the condition of the tie rods. 6. Check the proper operation of the shock absorbers.
7. Measure the vehicle's ride height.

Note:

Front suspension: measure distance "A" from the ground to the center of the front mounting bolt of the lower control arm.

Rear suspension: measure distance "B" from the ground to the center of the mounting bolt of the longitudinal arm. Before checking the wheel alignment angles, the ride height must be adjusted to the specified standards.

If the ride height does not meet the specified standards, try to correct it by pressing the body downward or lifting the body upward. (Models up to May 1996) Specified ride height: Front suspension "A": 198 mm Rear suspension "B":

.....
.....240 мм

(Models from May 1996)
Specified ride height:

Front suspension "A":
4A-FE (2WD).....185 мм
4A-GE (Automatic Transmission):..... 180 mm
4A-GE (manual transmission):.....174 мм

Rear suspension "B":
4A-FE (2WD).....245 мм
4A-GE (automatic transmission).....241 мм
4A-GE (manual transmission):..... 239 mm

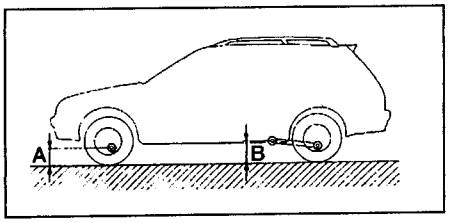

Front wheel alignment a ngle adjustment

Checking and adjusting toe-in

1. Measure the toe amount as follows:

a) Rock the vehicle up and down to stabilize the suspension.

b) Roll the vehicle forward about 5 meters on a horizontal surface, with the front wheels pointing straight. c) Mark the center of the tread on the rear side of the wheels and measure the distance "B" between the marks on the left and right tires.

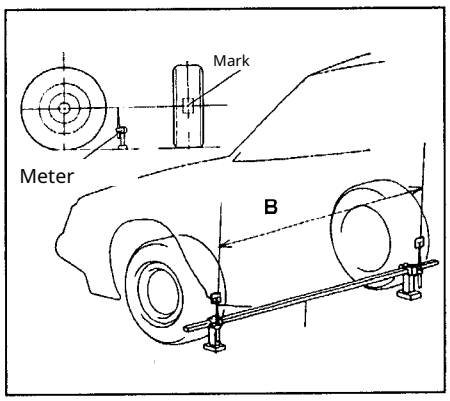

g) Roll the vehicle forward so that the marks on the rear side of the wheels are positioned forward at the height of the gauge.

Note: If when rolling the vehicle the marks end up below the level of the gauge, repeat the procedure starting from step (b).

d) Measure the distance between the marks on the right and left front wheels and calculate the toe. Toe = B - A

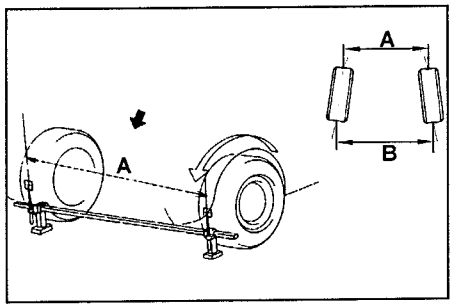

Nominal value. ..... 1 ± 2 mm

If the toe value does not meet the specified conditions, perform adjustment by turning the tie rods.

2. Adjustment of the toe-in magnitude.
a) Remove the clamps from the boots.
б) Loosen the locknuts of the steering tie rod ends.
c) Adjust the toe-in amount by turning the right and left tie rods by the same number of turns. Nominal value.....
1 ± 1 mm

Note: ensure that the lengths of the right and left tie rods are the same. Difference in tie rod lengths.....less than 1 mm

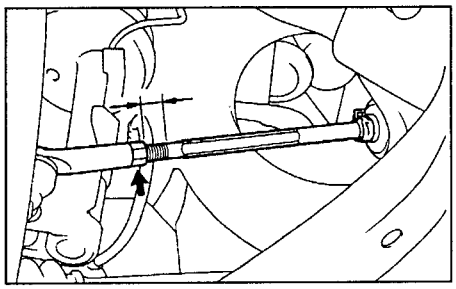

d) Tighten the lock nuts of the steering tie rod ends.

Tightening torque... ..... 56 N·m

e) Refit the boots and secure them with clamps.

Note: make sure the boots are not twisted.

Checking the wheel turn angles

1. Place the vehicle on turn plates.

Attention:

- The check is performed with the brake pedal depressed.
- Remove the stop light fuse - signals.

2. Check the wheel steering angles.

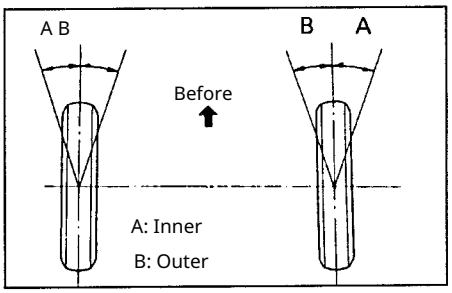

Steering angle:

Outer in a turn wheel... .....33°25'
Inner in a turn wheels.. ..... 39°15' ± 2°

Camber check, longitudinal and transverse inclination of steering axes

1. Remove the decorative cap. 2. Remove the cotter pin and cap. Attention: For inspection, wheels with cast rims should be replaced with wheels with standard rims.

3. Install the special tool on the hub as shown in the illustration.

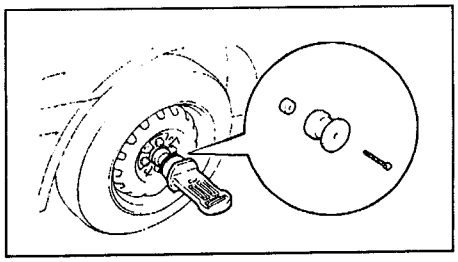

4. Install the device for measuring the cam ber and the longitudinal and lateral tilt of t he steering axis.

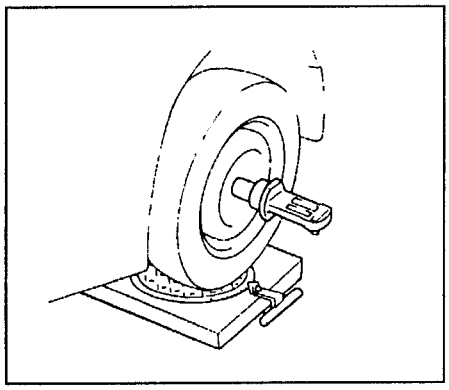

5. Check the front wheel camber and the lo ngitudinal and lateral tilt of the steering axi s.

(Models up to May 1996)
Camber... ..... 0°00' ± 45'
Longitudinal tilt of the steering axis. ..... 1°15' ± 45'
Lateral Tilt steering axes. ..... 13°25' ± 45'

(Models from May 1996)
Camber:
4A-FE (2WD)..... -0°10' ± 45'
4A-GE (AT) ..... -0°15' ± 45'
4A-GE (MT). ..... -0°20' ± 45'
Caster steering axes:
4A-FE (2WD)..... 1°20' ± 45'
4A-GE (AT) ..... 1°30' ± 45'
4A-GE (MT).. ..... 1°25' ± 45'
Lateral Tilt steering axes:
4A-FE (2WD)..... 12°35' ± 45'
4A-GE (automatic transmission)..... 12°40' ± 45'
4A-GE (manual transmission)..... 12°50' ± 45'

Difference between camber and caster of the ste ering axis of the right and left wheels
....less than 45'

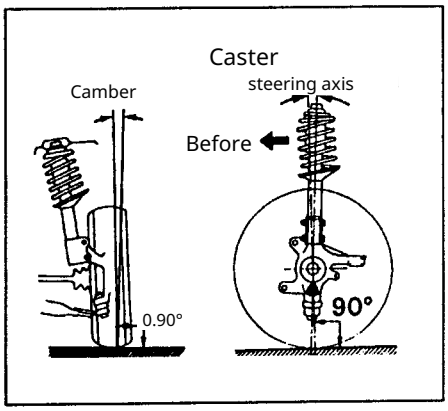

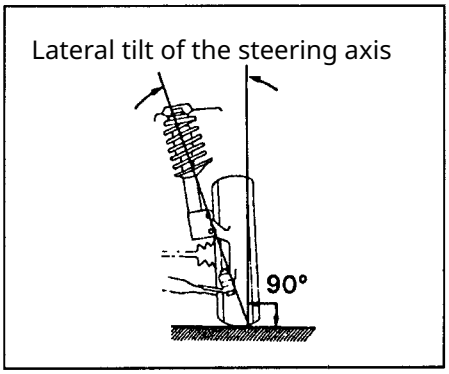

Front Wheel Camber Adju stment

Note: After adjusting the cam- ber, check t he front wheel toe value.

1. Remove the front wheels.
2. Loosen the two nuts on the lower side of the strut.
3. Adjust the camber by moving the lower part of the strut.

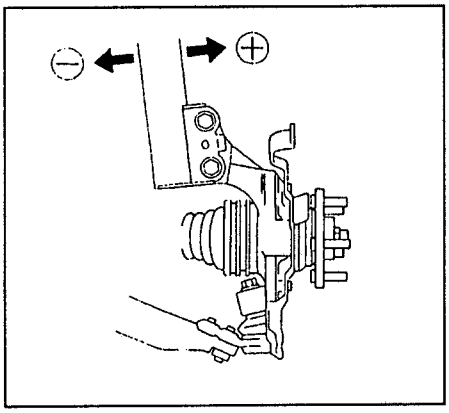

Note: when using a bolt without a mark, cam ber adjustment is possible within ±0°12 4. Ti ghten the bolts.

Tightening torque ..... 255 N·m
5. Install the front wheels.
Tightening torque ..... 105 N·m
6. Check the camber.
If the camber does not meet the specified conditions, use the table to select the bolt and make the adjustment. 7. Unscrew th e two nuts on the lower side of the strut. C aution:

- If the camber deviates from the specified value by less than 45', the upper bolt may not need to be...
to replace.

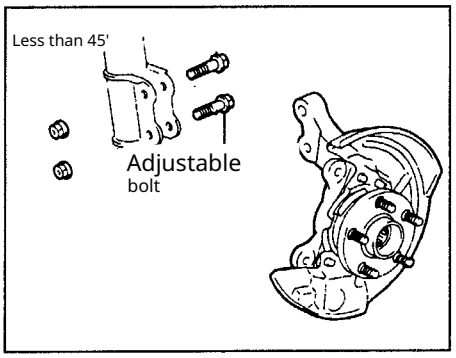

- If the camber deviates from the specifie d value by more than 45', the upper bolt must be replaced with a bolt of minimum diameter.

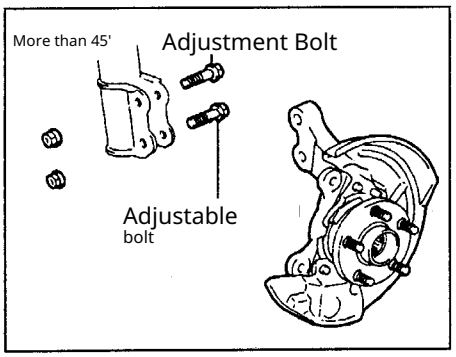

8. Using the table, select the bolt and m ake the adjustment.

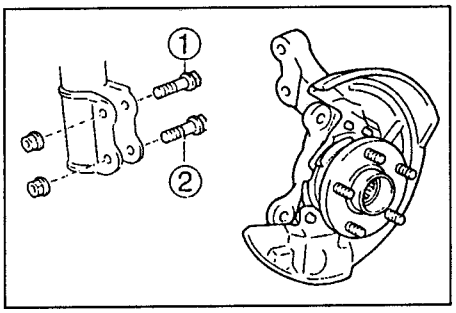

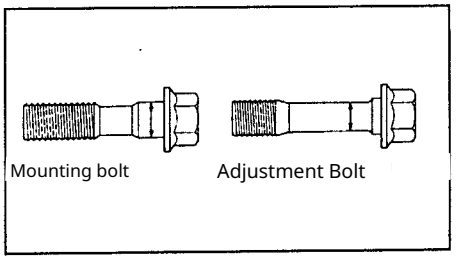

Note: if the bolts are being replaced both do not remove them at the same time.

Table. Adjusting bolts.

	Bolt diameter, mm	Angle	Bolt type
90105-15004	13,9	± 15'	mark 1
90105-15005	13,3	± 30'	mark 1 1
90105-15006	12,4	± 45'	mark 1 1

Table. Front wheel camber adjustment.

Bolt / Angle	Adjusting bolt Bolt mounting 90105-15004		90105-15005		90105-15006			
	1	2	1	2	1	2	1	2
0' ~ 15'	●			●				
15' ~ 30'	●					●		
30' ~ 45'	●							●
45' ~ 1°00'			●					●
1°00' ~ 1°15'					●			●
1°15' ~ 1°30'							●	●

Rear wheel alignment adjustment Checking and adjusting toe

1. To stabilize the suspension, rock the vehicle up and down.
2. Set the wheels to the straight-ahead position and roll the vehicle forward about five meters.

3. Position the measuring part of the device at the center of the wheel axle.
4. Mark the centers of the tread on the rear of each tire and measure the distance "B" between the marks on the right and left tires.

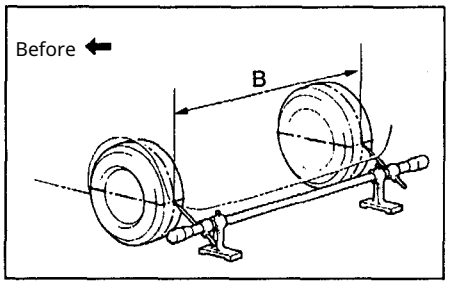

5. Roll the vehicle forward so that the marks on the rear side of the wheels are positioned in front at the height of the gauge.

Note: if, when rolling the vehicle, the marks end up below the level of the gauge, repeat the procedure from step 3.

6. Measure the distance "A" between the marks.
7. Check the toe measurement.
Toe
when checking (B−A). ..... 4±2 mm

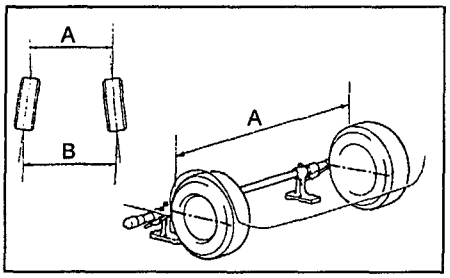

8. If the toe value does not correspond to the given data, perform the adjustment.

(4WD models)
a) Measure the distance from the wheel to the eccentric as shown in the illustration on the right and left sides. Difference in measurements: ..... less than 3 mm

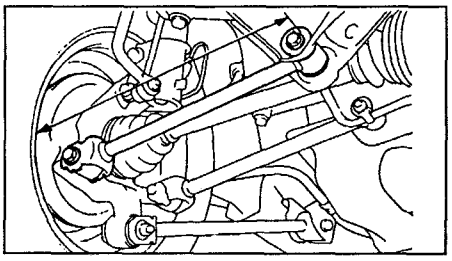

If the difference between the right and left measurements exceeds 3 mm, perform the adjustment procedure given below.

b) Loosen the locknuts.
c) When adjusting toe-in, turn the eccentrics in the required direction.

Note: Toe-in changes by approximately 4 mm when the eccentric on one side is turned through the full range of the scale.

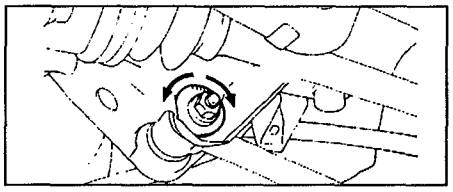

Toe-in during adjustment... 4 ± 1 mm
d) Tighten the locknuts.
Tightening torque. ..... 91 Н·м

(2WD models)
a) Measure the length of the left and right suspension arm No. 2.
Length..... ..... 502 mm
Difference of measurements for the left and the right levers. ..... less than 1 mm

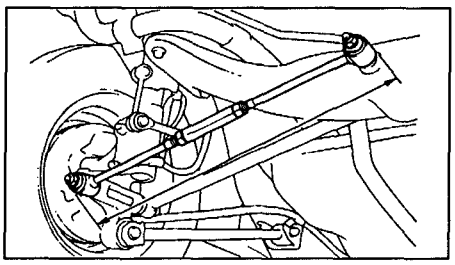

If the difference in measurements between the right and left exceeds 1 mm, perform the adjustment procedure given below.

b) Loosen the locknuts.
c) When adjusting toe, turn the bushings of the left and right arms in the required direction.

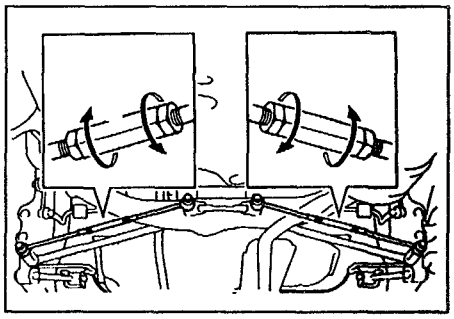

Toe during adjustment... 4 ± 1 mm
g) Tighten the locknuts.
Tightening torque....56 N·m.....

Rear wheel camber check

1. Remove the decorative cap. 2. Install the instrument for measuring longitudinal and lateral caster and camber of the steering axes.

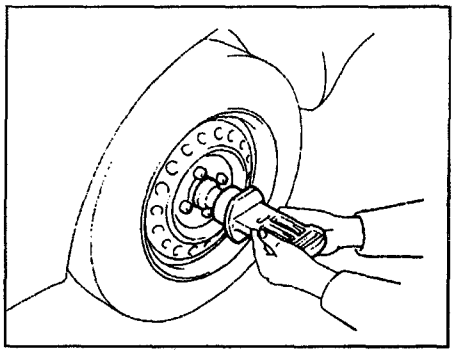

3. Check the rear wheel camber.
(Models up to May 1996)
Camber ..... -1°00' ± 45'

(Models from May 1996)
Camber:
4A-FE (2WD) ..... -0°55' ± 45'
4A-GE ..... -1°05' ± 45'

Right camber difference
and the left wheels..... ..... less than 45'

Front suspension

Front strut suspension

Removal

1. Jack up the vehicle and remove the front wheel.
2. (Models with ABS) Unscrew the bolt and remove the wheel speed sensor wire bracket from the strut.
3. Unscrew the bolt and remove the brake hose bracket from the strut.
4. Remove the front suspension strut assembly.

Disassembly

1. Remove the spring.

a) Install a bolt and two nuts on the lower bracket of the strut to secure it in the vise.

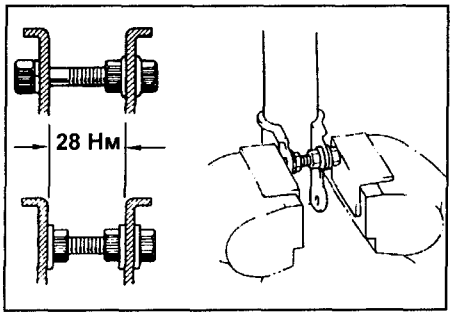

b) Using a special tool, compress the spring.

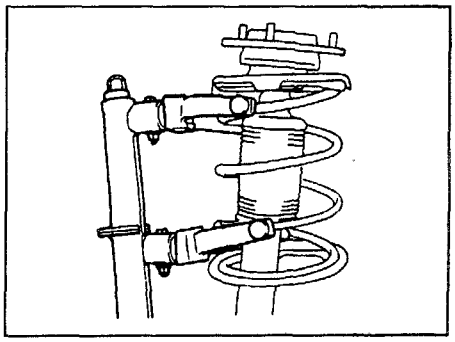

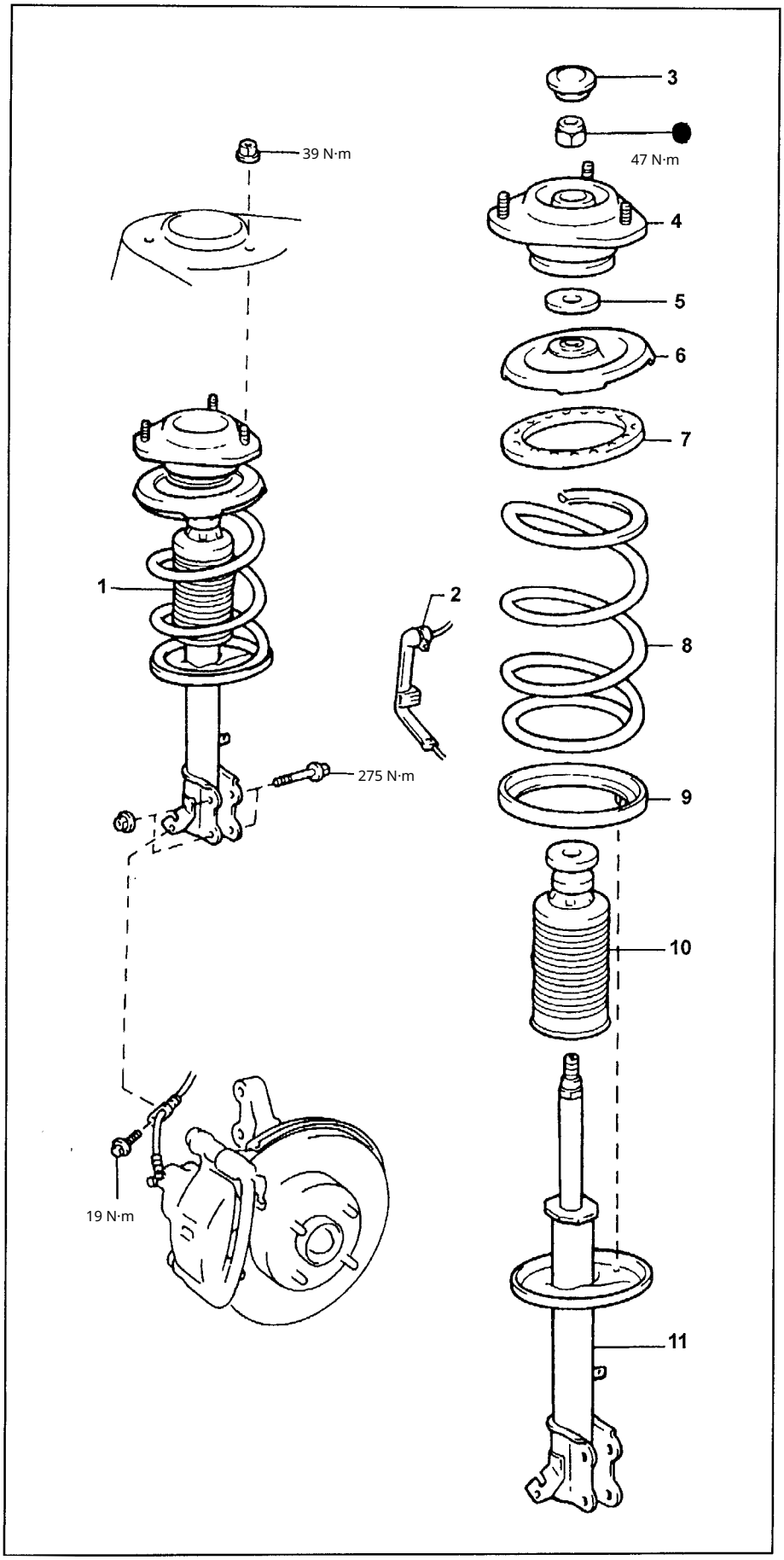

Front suspension strut. 1 - front suspension strut assembly, 2 - bracket for the wheel speed sensor wire (ABS), 3 plug, 4 - Upper strut mount, 5 seal, 6 Upper spring seat, 7 - Upper vibration isolator, 8 - spring, 9 lower vibration isolator, 10 - compression travel stopper, 11 - front suspension strut.

c) Using a special tool, hold the upper spring seat and loosen the nut.

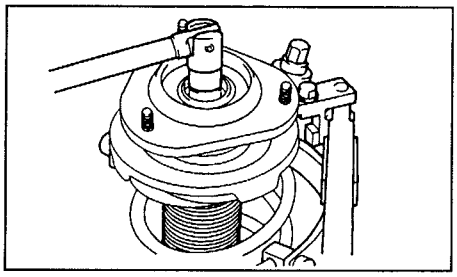

g) Remove the strut upper mount, seal, upper spring seat, upper insulator, spring, bump stop, and lower insulator.

Shock absorber inspection By extending and compressing the shock absorber rod, check that its travel is smooth and that there is no abnormal resistance or noise.
If faulty, replace the shock absorber.

Assembly
1. Install the lower vibration isolator on the strut.
2. Install the spring compression travel limiter on the rod.
3. Install the spring and the upper Strut mount.

a) Using a special tool, compress the spring.

b) Install the spring onto the strut. Note: position the lower end of the spring into the groove of the lower spring seat of the strut.

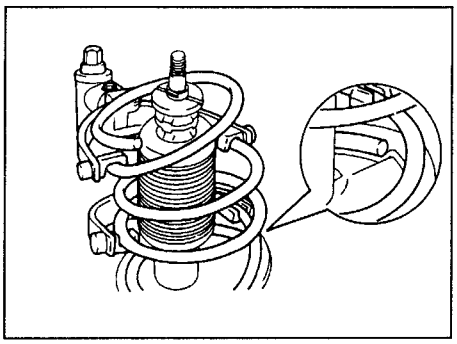

c) Install the upper vibration isolator.

g) Install the upper spring seat on the strut, orienting it so that the "OUT" mark faces the outside of the vehicle.

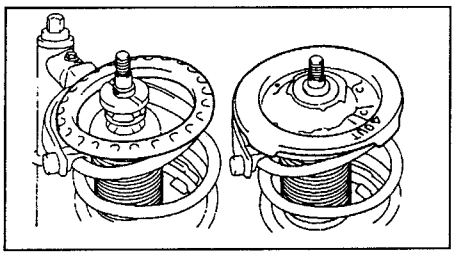

d) Install the seal and the upper strut mount.

e) Using a special tool, hold the upper spring seat and tighten the new nut. Tightening torque...47 N·m

f) Pack the suspension mount with grease of suitable consistency.

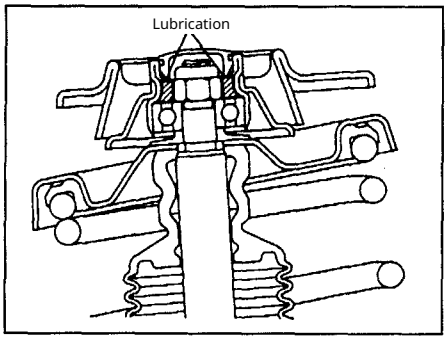

3) Install the plug.

Installation

1. Install the shock absorber strut assembly and tighten the three nuts.
Tightening torque.. .....39 Н·м
2. Connect the shock absorber strut to the steering knuckle.
a) Apply engine-grade lubricant to the threads of the nuts new oil.
b) Install and tighten the two bolts and nuts.
Tightening torque. .....275 N·m
3. Attach the brake hose and the wheel speed sensor wire bracket (ABS) to the strut.
Note: make sure that the speed sensor wire is not twisted over itself.

Bolt tightening torque for the brake hose .....19 Н·м
4. Install the front wheel and lower the vehicle.
Tightening torque... .....103 N·m
5. Check the front wheel alignment angles.

6. Check the operation of the anti-lock braking system (see the "Brake System" chapter).

Lower front suspension arm Removal

1. Jack up the vehicle and remove the front wheel.
2. Remove the front driveshaft assembly (see the "Driveshaft" chapter). 3. (Except for the left arm on automatic transmission models) Unscrew the retaining nut while holding the stabilizer link at the hexagonal section, and disconnect the link from the lower arm.

(Left arm on automatic transmission models) Disconnect both stabilizer links. 4. (Except for the left arm on automatic transmission models)
Disconnect the ball joint from the lower arm.
(Left arm on automatic transmission models) Disconnect the ball joints on both sides.
5. Unscrew the bolts and nut and remove the stabilizer bracket together with the lower arm bracket.
6. Remove the lower suspension arm. (Except for the left arm on automatic transmission models)
a) Unscrew the bolt and remove the lower control arm.

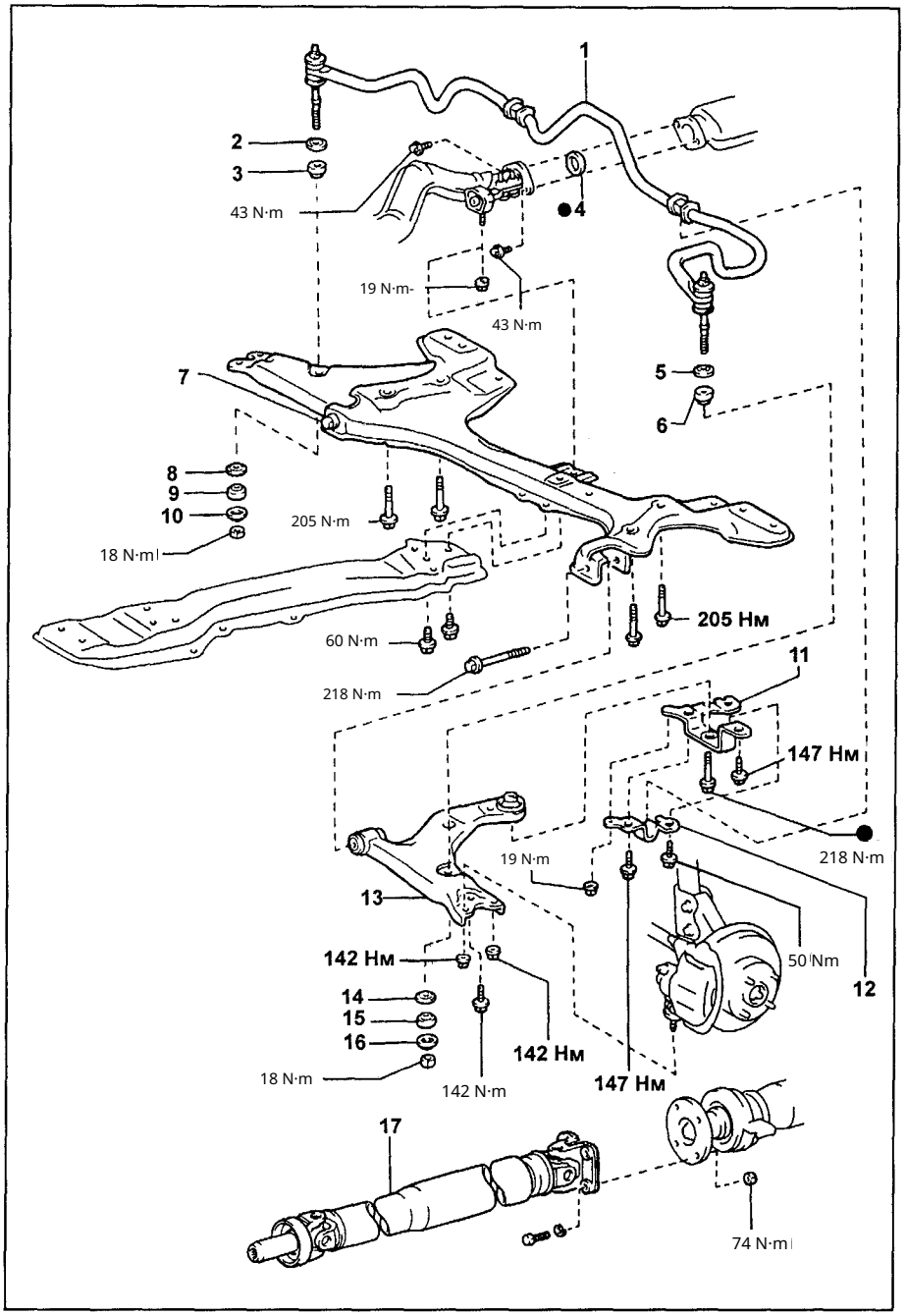

Removal of the front suspension lower control arm. 1 - front stabilizer, 2, 5, 8, 10, 14, 16 - washer, 3, 6, 9, 15 - bushing, 4 - gasket, 7 - crossmember, 11 - lower control arm bracket, 12 - bracket No. 1 of the anti-roll (stabilizer) bar, 14 - lower control arm, 17 - front driveshaft assembly. Note: parts No. 1, 4, 7, 17 are removed only when removing the left lower control arm on models with an automatic transmission. Installation

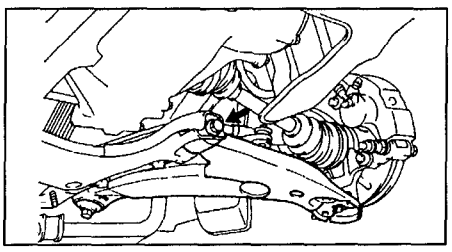

(Left control arm on automatic transmission models) a) Remove the exhaust pipe. b) Remove the anti-roll (stabilizer) bar.
c) Remove the crossmember.
d) Disconnect the lower control arm from the crossmember.

1. Installation is carried out in the reverse order of removal.
2. During installation, follow the assembly diagram.
Note: the mounting bolts of the lower control arm bracket, bracket No. 1 of the anti-roll (stabilizer) bar, and the bolt securing the lower control arm to the crossmember are tightened after the suspension has been stabilized.

3. While pressing the body downward and lifting it upward, stabilize the suspension.
4. Jack up the vehicle and remove the front wheel.

5. Place a wooden block under the lower arm, then remove the jack so that the suspension is loaded by the vehicle's weight.
6. Finally tighten the mounting bolts of the lower suspension arm bracket and bracket No. 1 of the anti-roll (stabilizer) bar.

Tightening torque:

Bolt "A"	147 N·m
Bolt "B"	218 N·m
Bolt "C".	147 N·m
Bolt "D".	50 N·m
Nut "E"	19 N·m

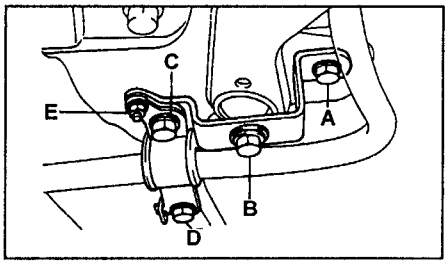

7. Finally tighten the bolt securing the lower arm to the cross beam.

Tightening torque:

models without automatic transmission	218 N·m
models with automatic transmission	161 N·m

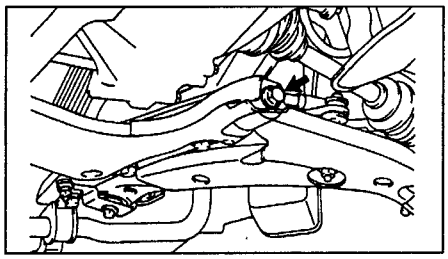

8. Install the front wheel.

Tightening torque.. ..... *103 Н·м*

9. Check the front wheel alignment angles.

10. Check the operation of the anti-lock braking system (see the "Brake System" chapter).

Lower ball joint

Lower ball joint inspection

1. Jack up the front of the vehicle.

2. Wrap a screwdriver with a cloth and place it between the wheel and the lower ball joint as shown in the illustration.

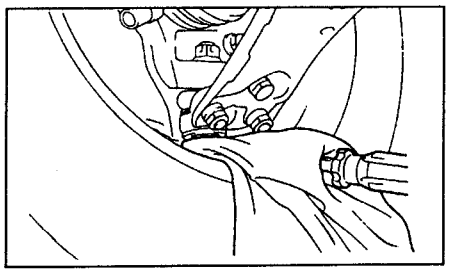

3. While applying force, make sure that the joint does not move. If movement occurs, replace the lower ball joint.

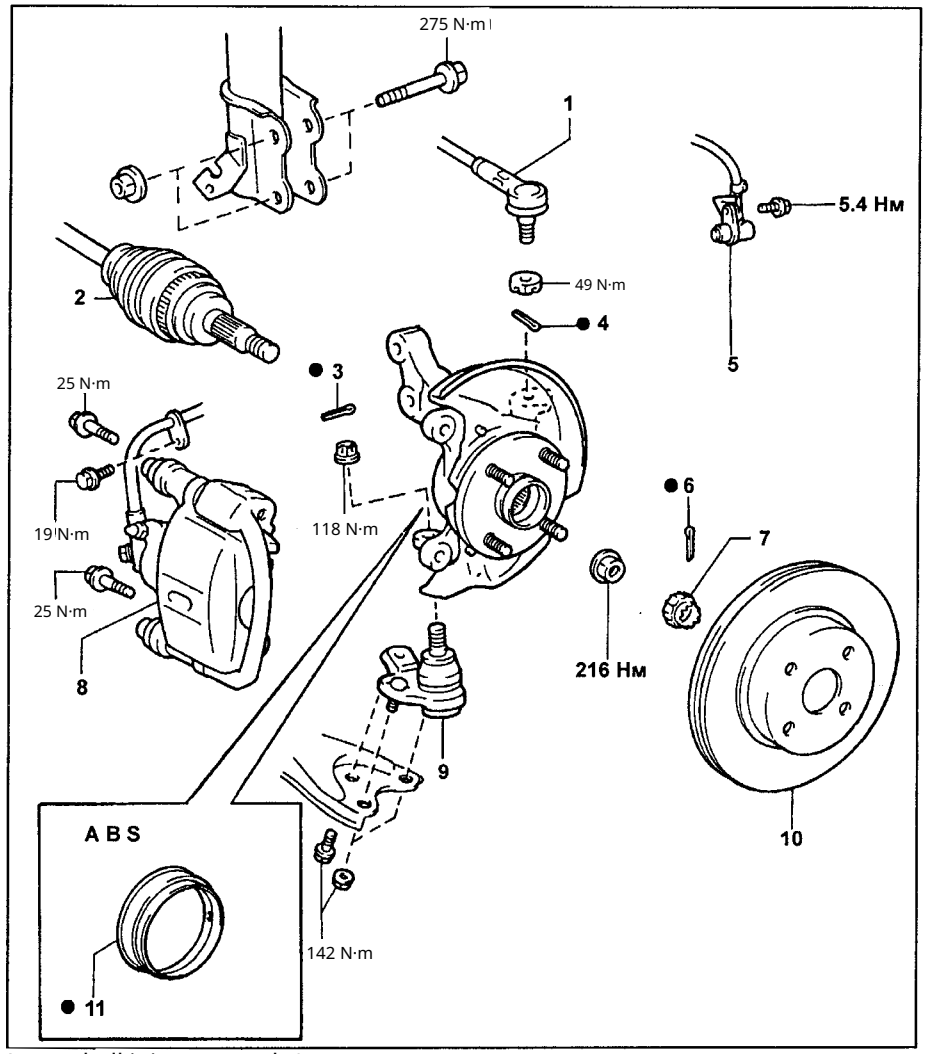

Lower ball joint removal. 1 - tie rod end, 2 - front cotter pin, 5 - speed drive shaft, 3, 4, 6 - sensor (ABS), 7 - locknut cap, 8 - brake caliper, 9 - lower ball joint, 10 - brake disc, 11 - dust boot. Removal

1. Remove the steering knuckle assembly with the hub (see the "Front Axle Hub" section).
2. (Models with ABS)
Using a screwdriver, remove the dust boot.

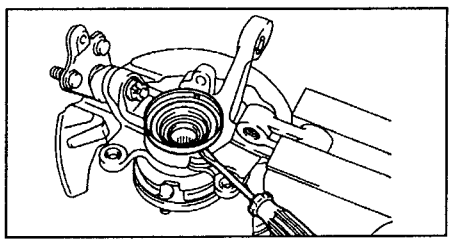

3. Remove the lower ball joint from the steering knuckle.
a) Remove the cotter pin and loosen the nut.
б) Separate the ball joint from the steering knuckle.

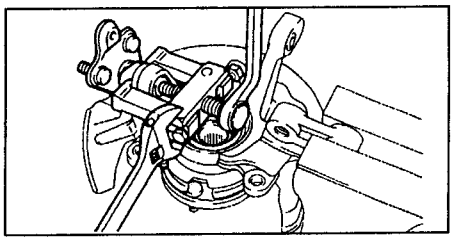

Lower ball joint inspection

Check the turning torque of the ball joint.

a) Before tightening the nut, rock the ball joint stud from side to side 5 times.

b) Using a torque wrench, rotate the nut continuously (one turn every 2–4 seconds) and read the value on the fifth turn. Turning torque:

Tun 1.	0.05–0.98 N·m
Type 2.	0.98–4.90 N·m

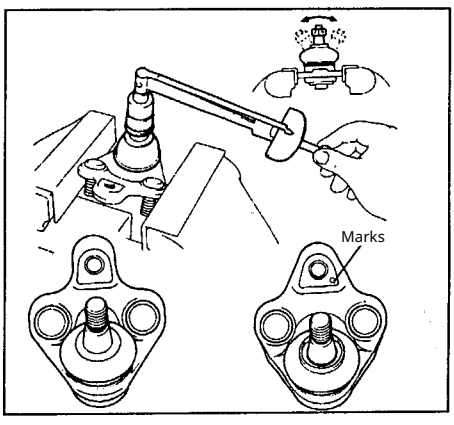

Installation

1. Install the lower ball joint onto the steering knuckle. Tighten the nut and install a new cotter pin.

Tightening torque.. ..... 118 N·m

Note: when installing the cotter pin, it may be necessary to turn the nut by no more than 60°.

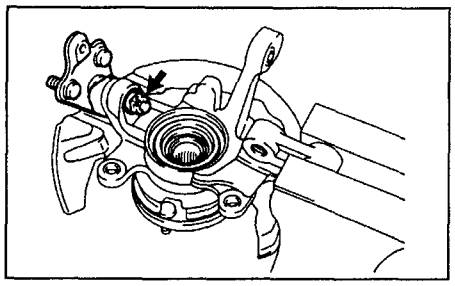

2. Using a suitable drift and a hammer, install the new dust boot on the knuckle.

Note: align the holes for the wheel speed sensor (ABS) in the dust boot and the steering knuckle.

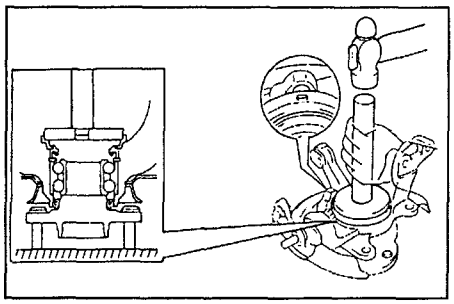

3. Install the steering knuckle assembled with the hub (see the "Front Axle Hub " section).

Anti-roll stabilizer

Removal

1. Jack up the vehicle, remove the front wheels.

2. Unscrew the nuts, remove the bushings and washers, and disconnect the stabilizer links zatora.

Tightening torque. ..... 18 N·m

3. Unscrew the bolts and the nut of the bracket for stabilizer mounting No. 1.

Tightening torque:

Bolt "S"	147 N·m
Bolt "D".	50 N·m
Nut "E".	19 N·m

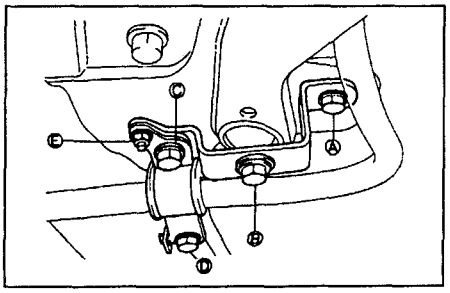

4. Unscrew the bolts and disconnect the exhaust pipe.

Tightening torque.. ..... *43 Н·м*

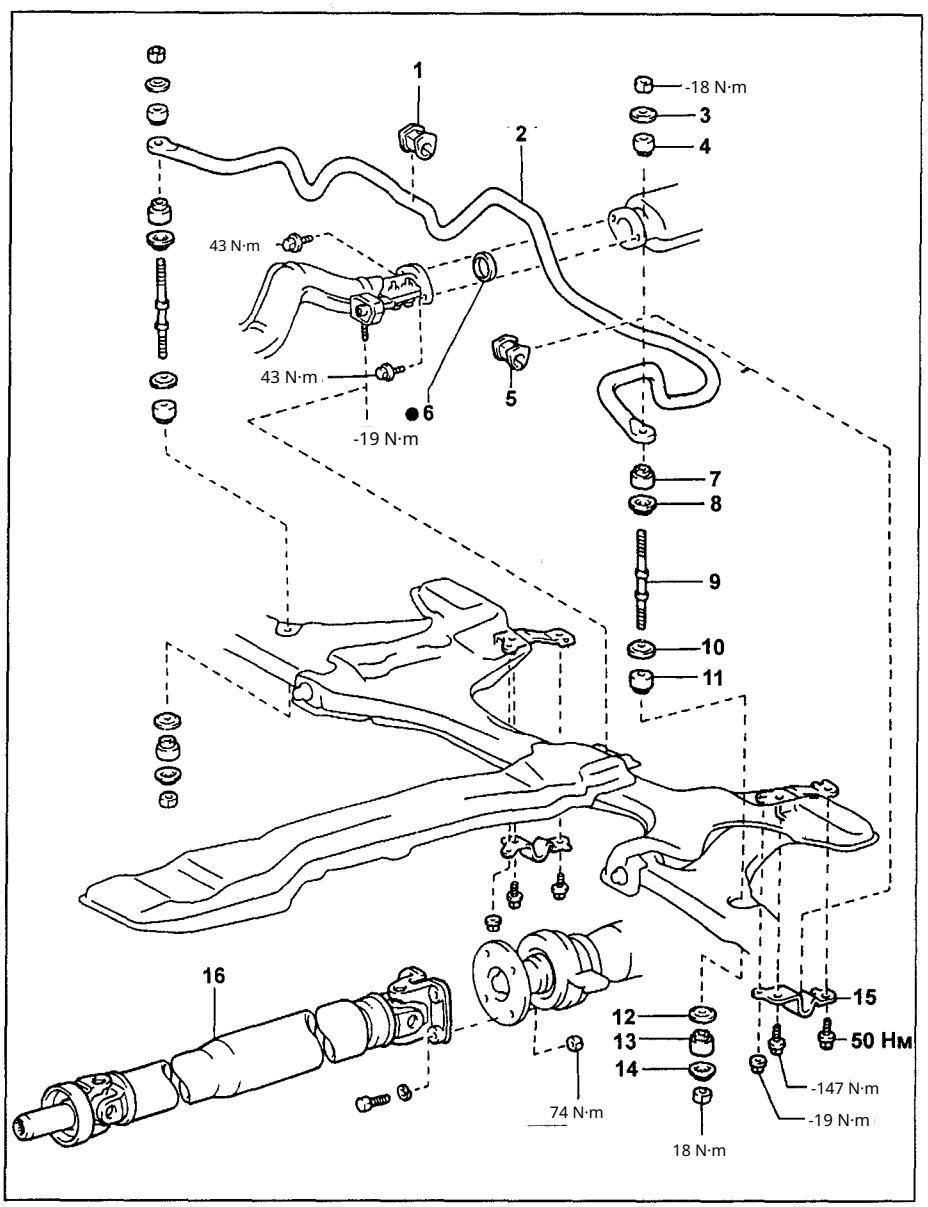

Removal of the anti-roll bar. 1, 5 — anti-roll bar bushing, 2 — anti-roll bar, 3, 8, 10, 12, 14 — washer, 4, 7, 11, 13 — bushing, 6 — gasket, 9 — anti-roll bar link, 15 — bracket No.1 of the anti-roll bar, 16 — front propeller shaft assembly.

5. Unscrew the bolts and remove the anti-roll bar.

6. Remove the bushings from the anti-roll bar.

Installation

1. Installation is carried out in the reverse order of removal.

2. During installation, follow the assembly diagram.

3. Check the front alignment angles wheel alignment angles.

Front axle hub

Removal of the steering knuckle with hub

1. Jack up the vehicle and remove the front wheel.

2. (For vehicles with ABS) Unscrew the mounting bolt and remove the wheel speed sensor.

3. Check the bearing axial play and the hub runout.

a) Disconnect the brake hose bracket from the strut.

b) Unscrew the two bolts and remove the caliper assembly.

c) Hang the caliper assembly on wire.

d) Make marks on the brake disc and hub and remove the brake disc.

e) Using a dial indicator, check the axial play of the bearing— of the bearing.

Maximum allowable play. ..... 0.05 mm

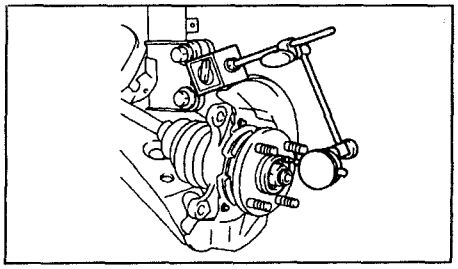

If the play exceeds the specified value, replace the bearing.

e) Using an indicator, check the hub runout.

Maximum runout .....0.07 mm

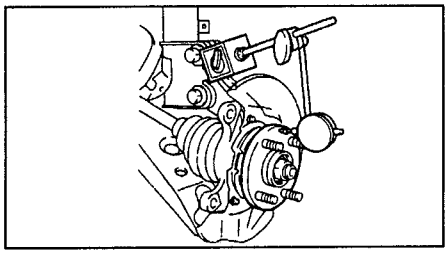

If the runout exceeds the specified value, replace the hub.

4. Unscrew the locknut.

a) Install the disc and caliper assembly. 6) Remove the cotter pin and the lock nut cap.

c) Loosen the locknut with the brake pedal depressed and unscrew it.

d) Remove the caliper assembly and the disc.

5. Disconnect the tie rod end

Tie rods.

a) Remove the cotter pin and unscrew the nut. b) Using a puller, disconnect the tie rod end from the steering knuckle.

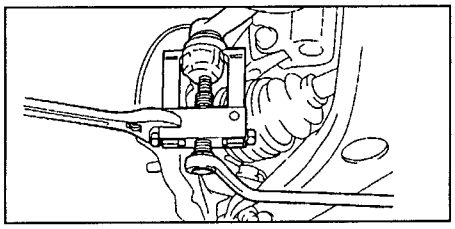

6. Unscrew the nuts securing the lower part of the strut to the steering knuckle.

Note: do not remove the bolts.

7. Unscrew the bolt and two nuts and disconnect the lower ball joint from the lower arm.

8. Remove the steering knuckle assembly with the hub.

a) By tapping the end of the drive shaft with a plastic hammer, separate the drive shaft from the hub.

Note:

- To avoid damaging the hub oil seal, wrap the threaded part of the shaft with insulating tape.
- If necessary, use a puller to disconnect the drive shaft.

b) Remove the bolts securing the lower part of the strut to the steering knuckle.

c) Remove the steering knuckle with the hub.

Note: be careful not to damage the drive shaft boot, the inner hub oil seal, or the teeth of the rotation speed sensor rotor on the drive shaft.

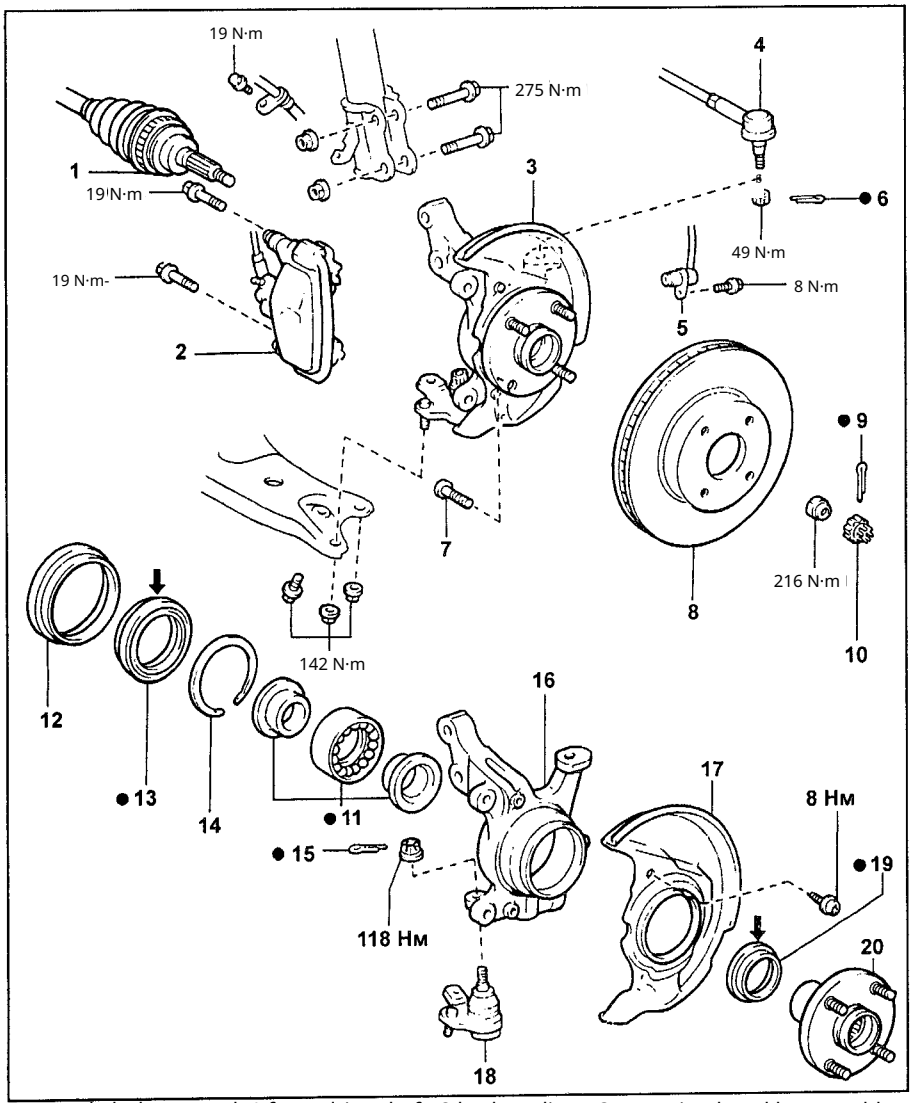

Front axle hub removal, 1 front drive shaft, 2 brake caliper, 3 - steering knuckle assembly with hub, 4 - tie rod end, 5 speed sensor (ABS), - cap, 6, 9, 15 brake disc, 10 cotter pin, 7 - hub bolt, 8 lock nuts, 11 - bearing, 12 - dust boot, 13, 19 - oil seal, 14 - snap ring, 16 - steering knuckle, 17 - splash guard, 18 - lower ball joint, 20 - front axle hub.

Note: during assembly, apply grease to the surfaces indicated by arrows.

Disassembly

1. Using a screwdriver, remove the dust cover.

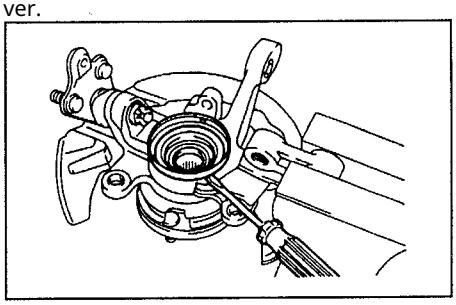

2. Remove the lower ball joint. Remove a) the cotter pin and unscrew the nut. b) Using a puller, remove the remove lower ball joint.

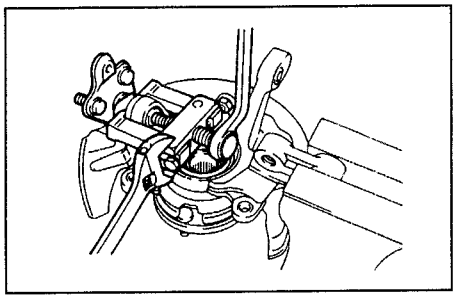

3. Using a special tool, remove the inner oil seal.

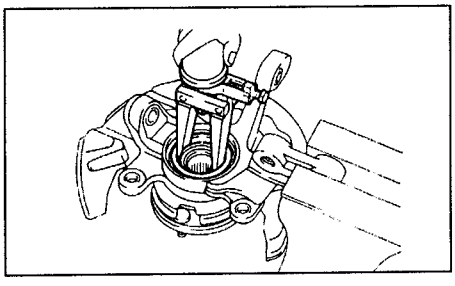

4. Using a special tool, remove the snap ring.

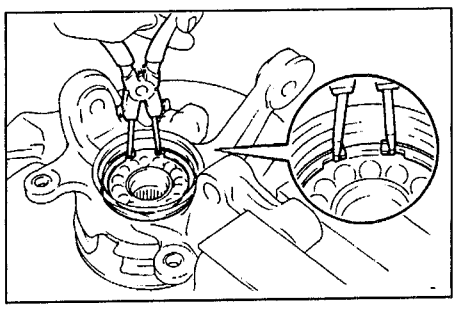

5. Remove the hub.
a) Using a special tool, remove the hub from the steering knuckle.

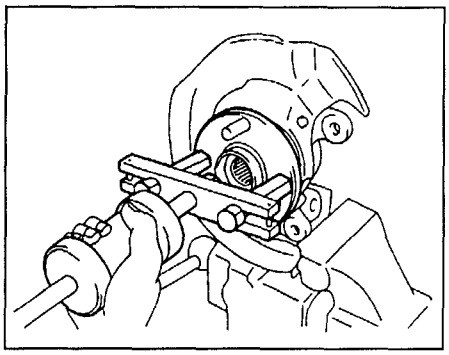

6) Remove the inner bearing race from t he hub.

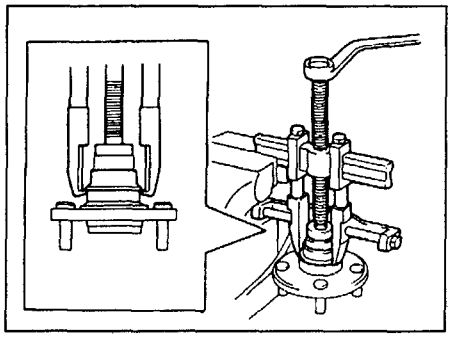

6. Unscrew the bolts and remove the d ust shield.
7. Using a special tool, remove the outer oil seal.

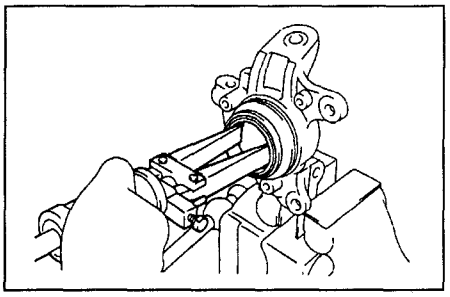

8. Remove the hub bearing.
a) Press the inner race into the bearing.
b) Using a suitable drift and a press, rem ove the bearing from the steering knuckl e.

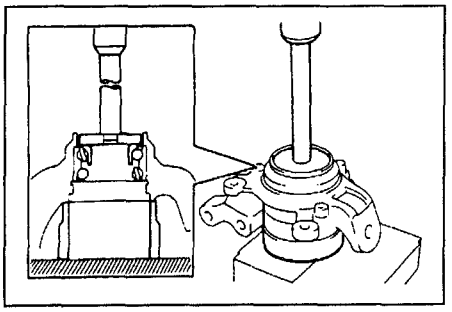

Assembly
1. Install the bearing. Note: I f the bearing was disassembled, install the i nner rings in the same positions as before disassembly. a) Remove the inner rings from the new bearing.

b) Using a special tool AND 8. Using a special tool and a hammer, install the ne w bearing. Press, install the new dust boot into the steering knuckle. aligning the hole in the dust boot with the hol e for the speed sensor (ABS).

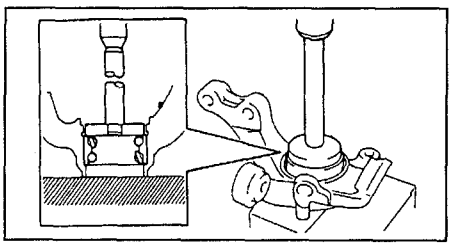

b) Install the inner rings. 2. Using a special tool, install the new outer oil seal .

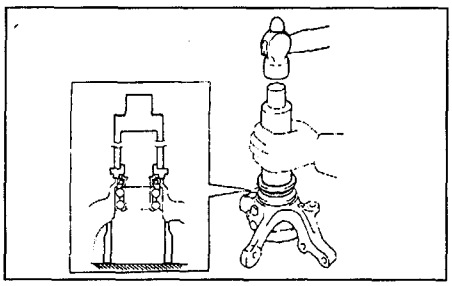

Note: apply a grease of appropriate consist ency to the sealing lip of the seal-seal.
3. Install the dust shield and tighten the 3 bolts.
Tightening torque 8 ..... .3 N·m
4. Using a special tool and a press, install th e hub. Note: be carefu l not to damage the bearing.

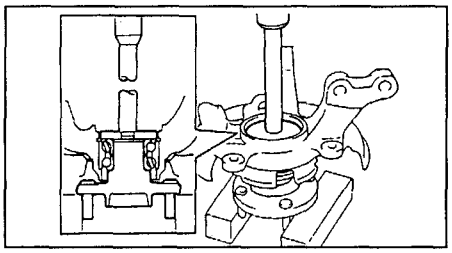

5. Using a special tool, install the retaining r ing.
6. Using a hammer and a special tool, ins tall the new inner Install the oil seal.

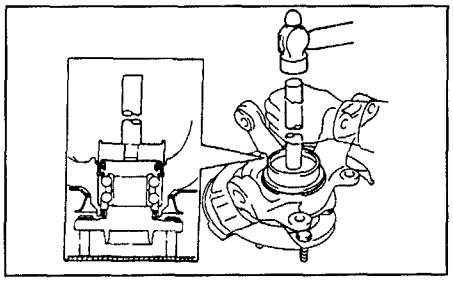

Note: apply consi- stent grease to the working edge of the oil seal.
7. Install the lower ball joint. a) Install th e lower ball joint and tighten the nut. I nstall a new cotter pin. Tightening torq ue 118 N·m Not e: When installing ..... the cott er pin, it may be necessary to turn the loc knut by an angle not exceeding 60°.

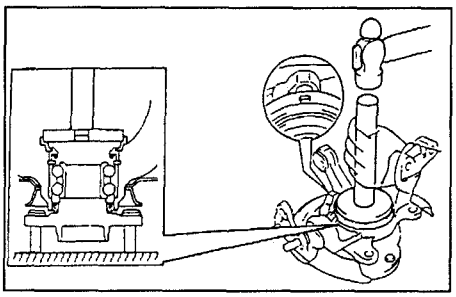

Installing the steering knuckle with the hub

1. Installation is carried out in the reverse order of removal.
2. See the assembly illustration "Front axl e hub removal" for the tightening torques of the bolts and nuts fastening the comp onents.
Note: when installing the split pin, the lockn ut may be further turned by an angle not ex ceeding 60°.
3. When installing, align the marks made duri ng removal.
4. Check the front wheel alignment angles. wheel alignment angles.
5. Check the operation of the anti-lock bra king system (see the "Brake System" chap ter). Replacing the hub bolt

1. Jack up the vehicle and remove the front w heel.
2. Remove the caliper assembly and the b rake disc.
3. Using a special tool, remove the hub bolt .

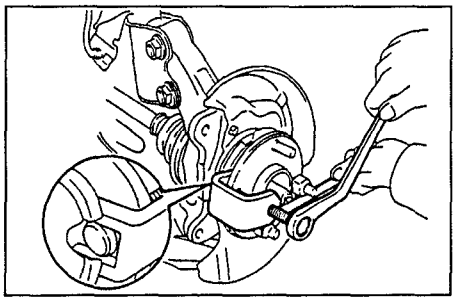

4. Install the hub bolt.
a) Install the washer and nut on the hub b olt as shown in the illustration.

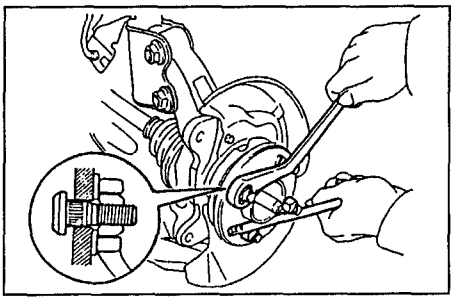

b) While tightening the nut, install th e bolt. 5. Install the brake disc and calip er assembly.
6. Install the front wheel and lower the vehicle .

Rear suspension (4WD models)

Rear suspension strut

Removal

1. Remove the trunk curtain.
2. Remove the speaker grille.
3. Raise the vehicle with a jack and remove the rear wheel.
4. Disconnect the brake hose and the wheel speed sensor from the strut. 5. Disconnect the stabilizer link from the rear suspension strut.
6. Unscrew the nuts securing the lower part of the strut to the knuckle.

Note: do not remove the bolts.

7. Remove the cover. .
8. Unscrew the three nuts, remove the bolts securing the lower part of the strut to the knuckle, and remove the rear suspension strut.

Disassembly

1. Remove the spring.
   a) Install a bolt and two nuts on the lower bracket of the strut to secure it in the vise.
   b) Using a special tool, compress the spring.
   c) Using a special tool, hold the upper spring seat and loosen the nut.
   d) Remove the bushing, the strut upper mount, the spring, the bump stop, and the lower spring seat.

Shock absorber inspection By extending and compressing the shock absorber rod, check that its travel is smooth and that there is no abnormal resistance or noise.

If faulty, replace the shock absorber.

Assembly

1. Install the lower spring seat. 2. Install the spring bump stop onto the rod.
3. Install the spring and the strut upper mount.
   a) Using a special tool, compress the spring.
   b) Install the spring onto the strut. Note: position the lower end of the spring into the groove of the lower spring seat of the strut.

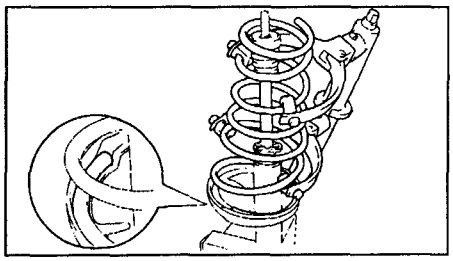

   c) Install the upper strut mount, orienting it as shown in the illustration.

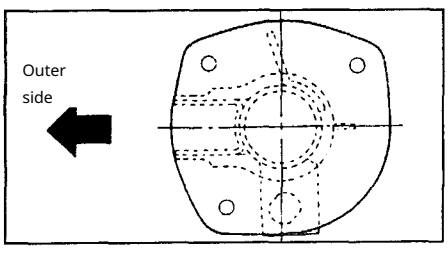

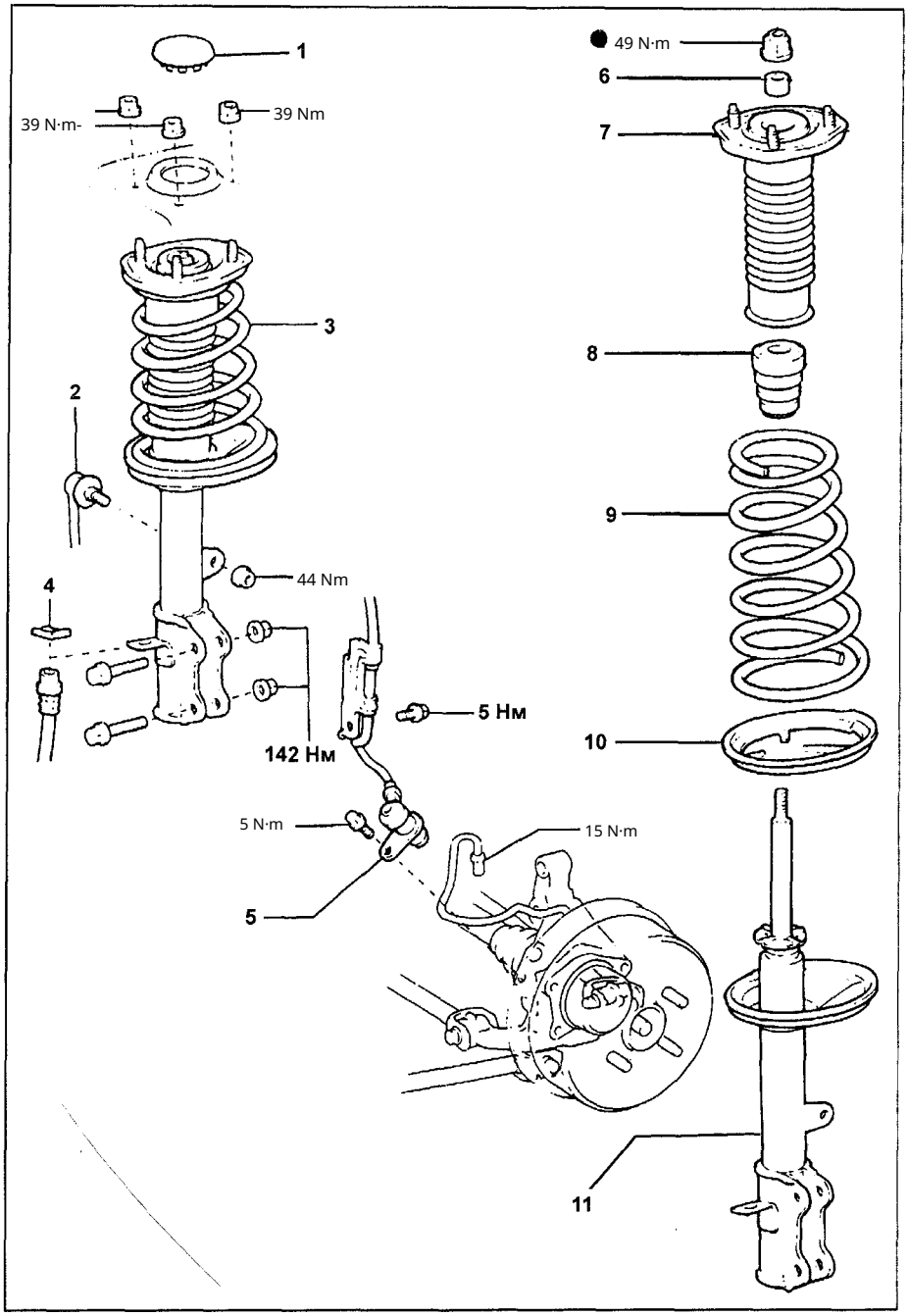

Rear suspension strut. 1 - cap, 2 - anti-roll bar link (stabilizer link), 3 - rear suspension strut assembly, 4 - retainer, 5 - speed sensor (ABS), 6 - bushing, 7 - upper strut mount, 8 - compression travel stop, 9 - spring, 10 - lower spring seat, 11 - rear suspension strut.

   d) Install the new bushing. Using a special tool, hold the upper spring seat and tighten the new nut. Installation

1. Installation is carried out in the reverse order of removal.
2. Refer to the assembly illustration "Rear Suspension Strut" for the tightening torques of the bolts and nuts securing the components. 3. Check the rear wheel alignment angles wheel alignment angles.
4. Check the operation of the anti-lock braking system (see the "Brake System" chapter).

Rear suspension arms

Removal and installation

1. Installation is carried out in the reverse order of removal.
2. The tightening torques for the bolts and nuts securing the suspension components are shown in the assembly illustration "Removal of Rear Suspension Arms".
3. When installing, preliminarily tighten all fasteners, then install the rear wheels, lower the vehicle, and rock it up and down to stabilize the suspension, after which perform the final tightening.

Anti-roll stabiliz er

Removal and installation

1. When removing and installing the a nti-roll bar (stabilizer), follow the asse mbly drawing.
2. Installation is carried out in the reverse order of removal.

Stabilizer strut in spection

Check the swivel torque of the stabilizer strut ball joint.

a) Before installing the nut, rock the ball j oint stud from side to side 5 times.

b) Using a torque wrench, turn the n ut continuously (one revolution every 2–4 seconds) and read the value on t he fifth revolution. Turn torque..... ....0.05–0.98 N·m If the torque does not meet the specification, replace the stab ilizer link.

Rear axle hub

Removing the knuckle with the hub

1. Jack up the vehicle and remove the rear wh eel.
2. With the brake pedal depressed, loosen the rear drive nut- counternut. crankshaft.
3. Remove the brake drum.
4. Remove the brake assembly (see the "Brake System" chapter).
5. Check the bearing axial clearance and the hub runout.

a) Using a dial indicator, check t he bearing axial clearance- of the bearing.

Maximum clearance ..... 0.05 mm

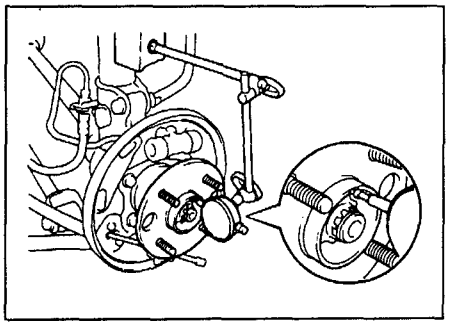

If the clearance exceeds the specified value, replace the bearing.

b) Using an indicator, check the hub runout.

Maximum runout. .....0.07 mm

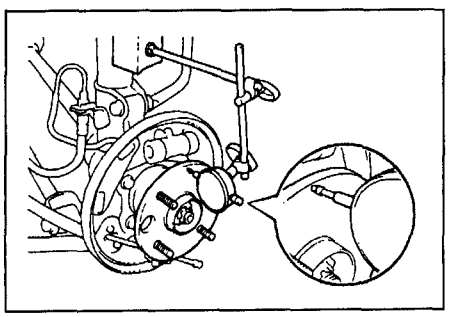

If the runout exceeds the specified value, replace the hub.

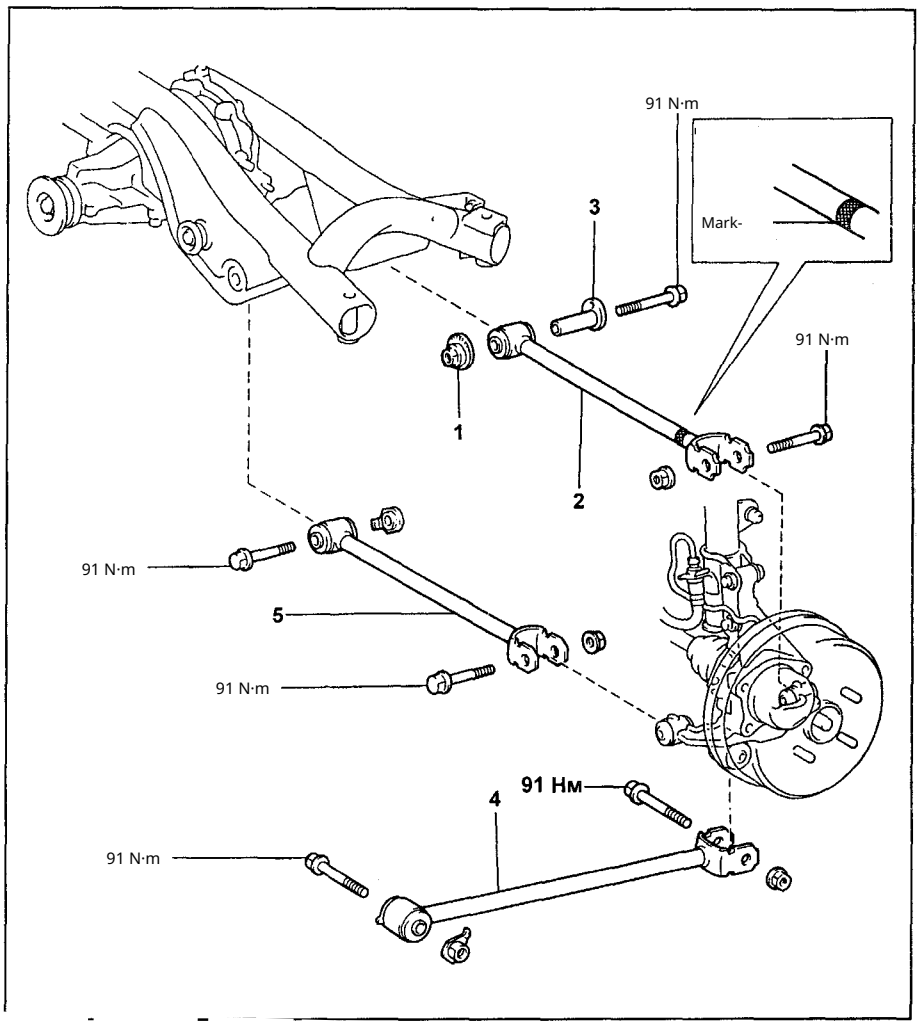

Removal of the rear suspension arms. 1 - washer, 2 - transverse arm No. 2, 3 - adjusting bushing, 4 - longitudinal arm, 5 - transverse arm No. 1.

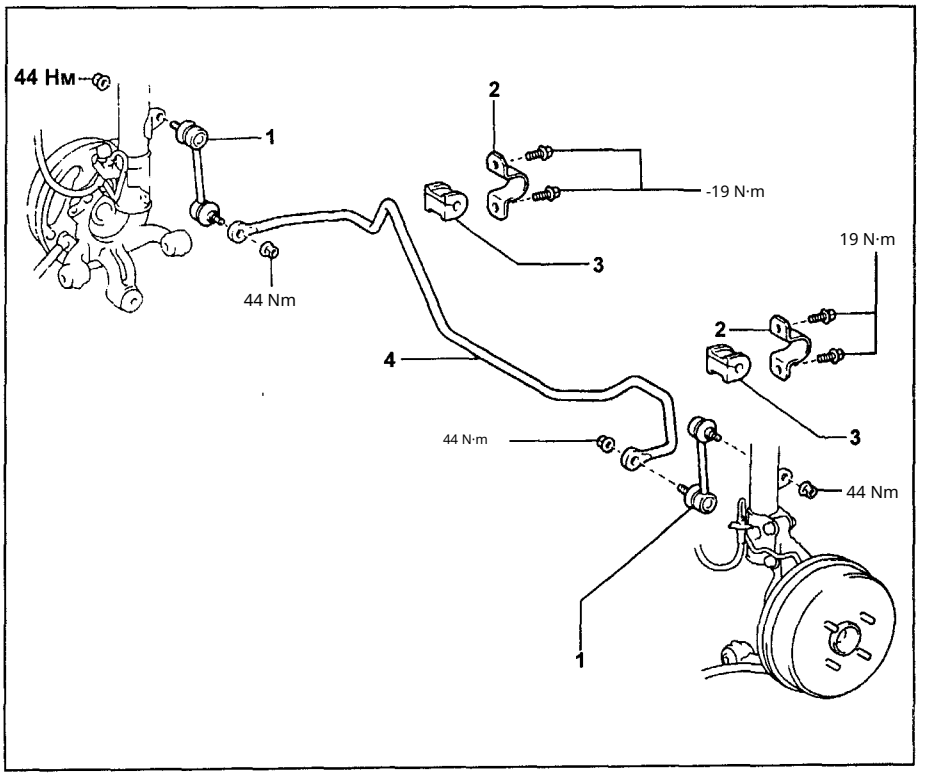

Removing the anti-roll bar. 1 — stabilizer strut, 2 — stabilizer mounting bracke t, 3 — bushing, 4 — anti-roll bar.

6. Disconnect the parking brake cable from th e brake backing plate.
7. (For vehicles with ABS)
Unscrew the mounting bolt and remove the wheel speed sensor (ABS).
8. Unscrew the nuts securing the lower end of the strut to the steering knuckle.

Note: Do not remove the bolts. 9. Dis connect the rear suspension arms from th e knuckle.

10. Remove the bolts securing the lower part of th e strut to the knuckle. Remove the knuckle assem bly with the hub.
Attention: be careful not to damage the drive shaft boot, the hub seals, or the te eth of the wheel speed sensor rotor on t he drive shaft.

Disassembly
1. Remove the hub.
a) Using a special tool, remove—
Remove the hub from the steering knuckle.

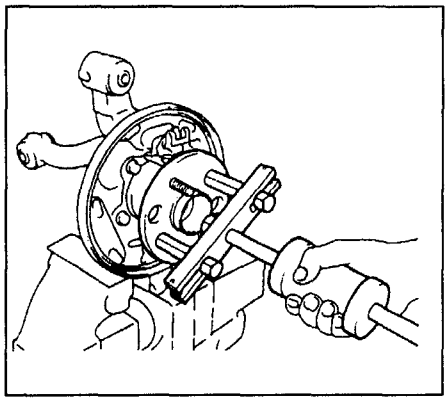

b) Remove the outer seal from the knuck в) le. Remove the inner race of the beari ng from the hub.

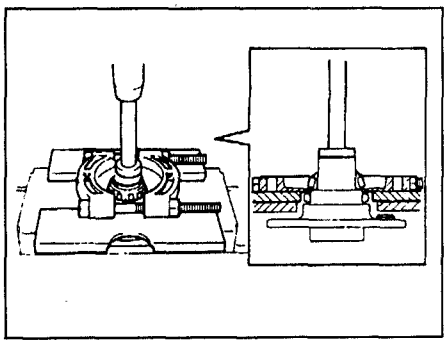

2. Remove the brake backing plate fro m the knuckle. 3. Using a special tool, rem ove the inner oil seal.

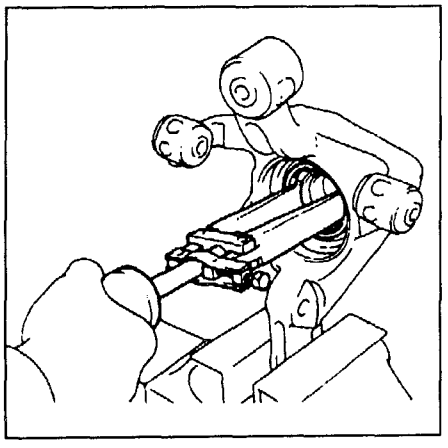

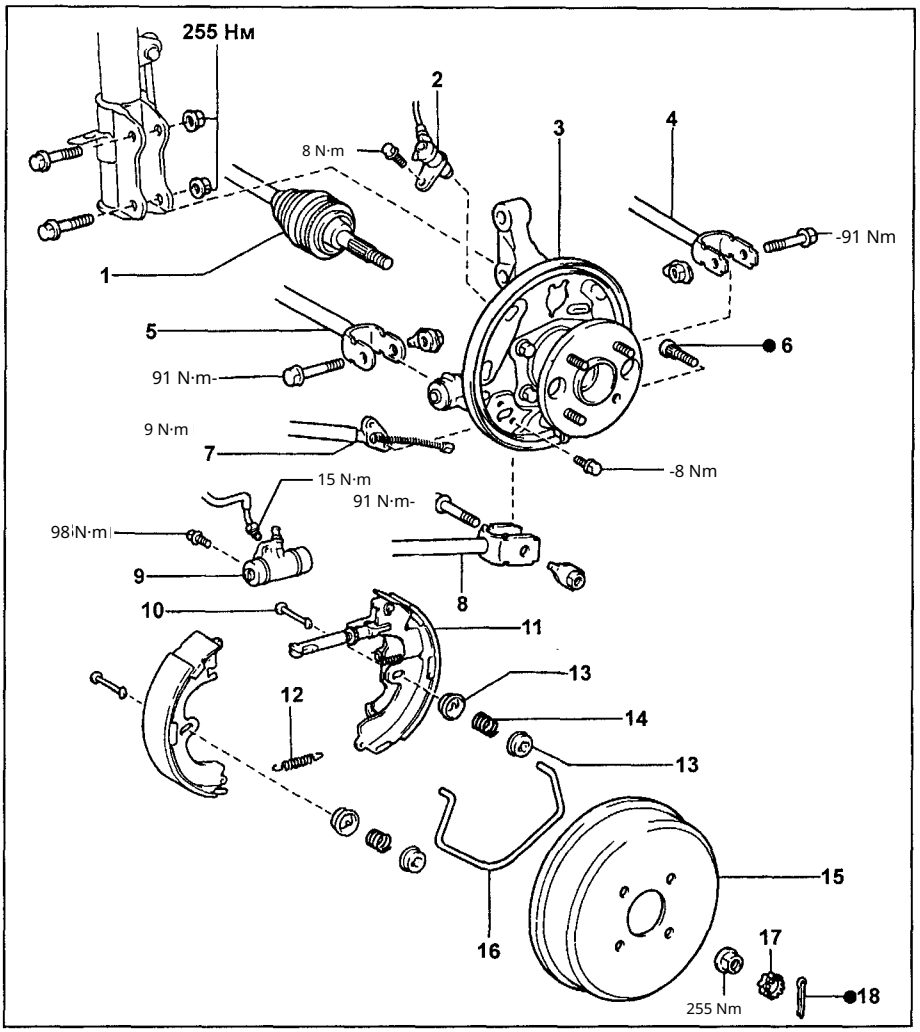

Removal of the rear axle hub assembly with knuckle. 1 - rear drive shaft, 2 - speed s ensor (ABS), 3 - rear axle hub assembly with knuckle, 4 - transverse link No. 2, 5 - tra nsverse link No. 1, 6 - hub bolt, 7 - parking brake cable, 8 - longitudinal link, 9 - whee l brake cylinder, 10 - brake pad retainer, 11 - brake shoe, 12 - retaining spring, 13 - s pring seat, 14 - retainer spring, 15 - brake drum, 16 - return spring, 17 - cap of the lo cknut, 18 - split pin.

caps,

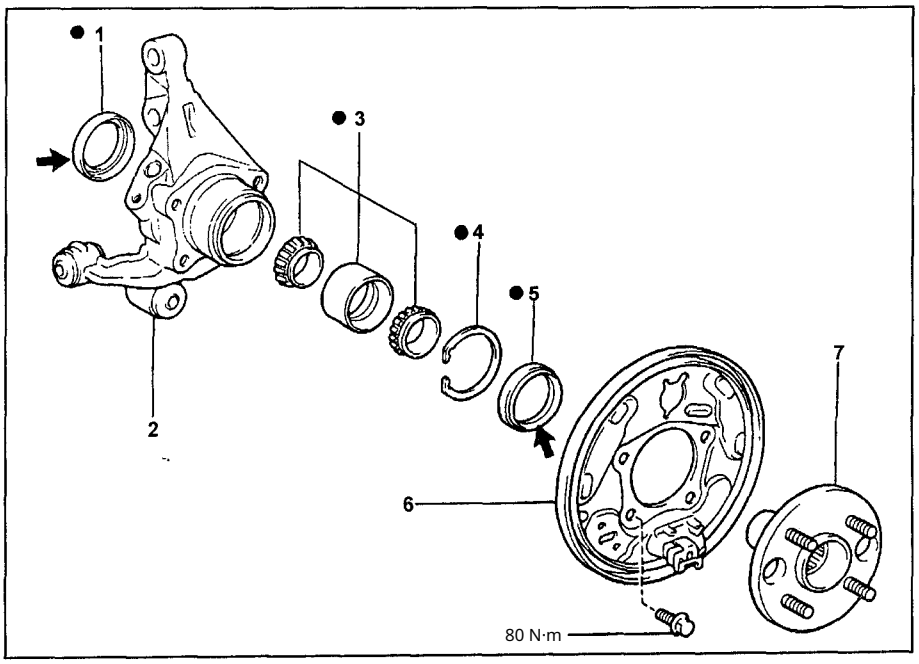

Rear axle hub. 1, 5 - seal, 2 - knuckle, 3 - bearing, 4 - snap ring, 6 - brake backing plate, 7 - rear axle hub.

4. Using a special tool, remove Note: apply a consistent/seal-retaining anti-seiz e grease to the w

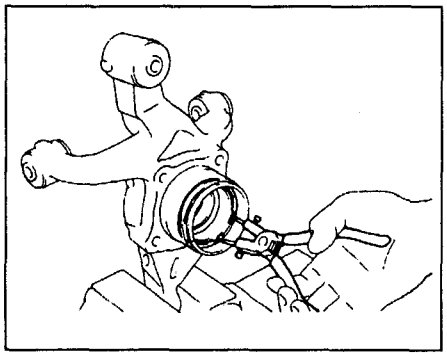

orking edge of the seal-
seal.

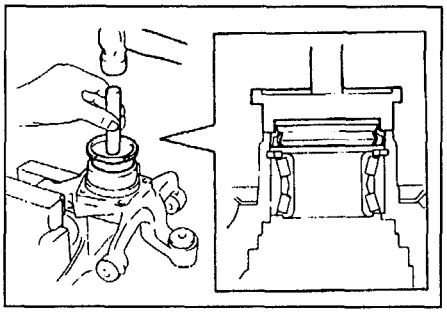

5. Remove the hub bearing. (a) Install the inner race into the bearing.

b) Using a suitable driver and press, extract th e bearing from the knuckle.

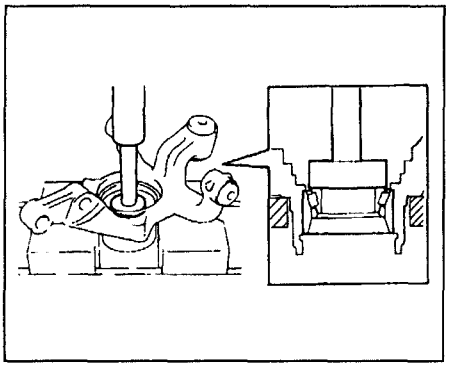

4. Install the brake backing plate onto the k nuckle. 5. Using a special tool and a press, in stall the hub. Note:

be careful not to damag e the bearing.

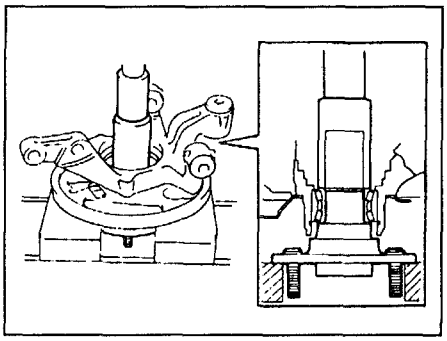

Assembly

Note: For the tightening torques of the bol ts and nuts securing the components, refer to the assembly illustration "Rear Axle Hub ".

1. Install the bearing.

Note: if the bearing is shattered-
rubbed, install internal
place the rings back in the same positions as before disassembly.

a) Remove the inner rings from the new be aring.

b) Using special tools press, install the new bearing into the steering knuckle.

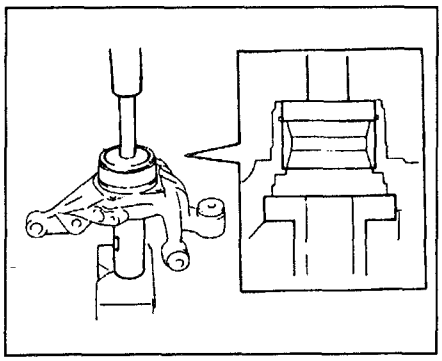

b) Install the inner races. ranslation> <translation>2. Using a special tool, install t he snap ring.

3. Using a suitable driver and a hamm er, install the new outer race.
Install the oil seal.

6. Using a hammer and a special tool, install the new inner
Install the oil seal.

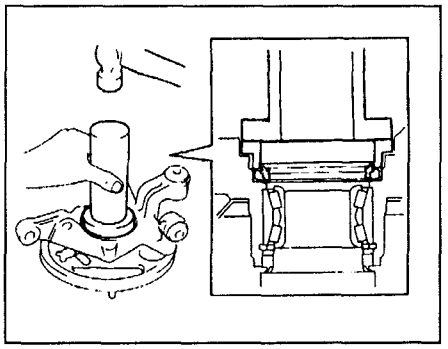

Note: apply a grease of appropriate consis tency to the sealing lip of the seal-
seal.

Installing the steering knuckle with the hub

Note: See the assembly illustration "Rear Axle Hub Removal" for the tightening tor ques of the bolts and nuts securing the co mponents.

2. Connect the rear suspension control arm s to the knuckle. Temporarily tighten the m ounting bolts.

3. Connect the knuckle to the lower part of the strut and tighten the mountin g nuts. 4. Install the wheel cylinder.

5. Install the wheel speed sensor (ABS).

6. Install the parking brake cable.

7. Install the rear brake assembly (see the "Brake System" chapter).

8. Install the brake drum. 9. Ins pect and, if necessary, adjust the re ar brake shoe clearance.
rear brake shoes.

10. Check the travel of the parking brake lev er.

11. With the brake pedal depressed, tight en the rear drive shaft locknut. Install the locknut cap and a new cotter pin.

12. Stabilize the suspension.

a) Install the rear wheels and lower the ve hicle.

b) By pressing the body downward and li fting it upward, stabilize the suspension.

13. Jack up the vehicle and remove the rear wheel.

14. Tighten the bolts securing the suspension a rms to the knuckle.

a) Place a wooden block under the knuck le and lower the jack to load the suspen sion components.

b) Tighten the bolts securing the suspension control arms to the steering knuckle.

15. Install the rear wheels and lower the vehicl e.

16. Check the rear wheel alignment angles.

17. Check the operation of the anti-lock b raking system (see the "Brake System" ch apter).

Hub Bolt Replacement

1. Jack up the vehicle and remove the rear wh eel.

2. Remove the brake drum.

3. Using a special tool, remove the hub bolt.

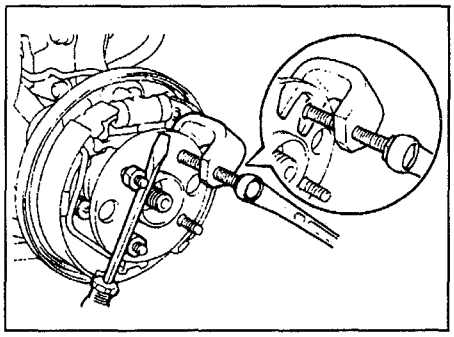

4. Install the hub bolt.

a) Install the washer and nut on the hub b olt as shown in the illustration.

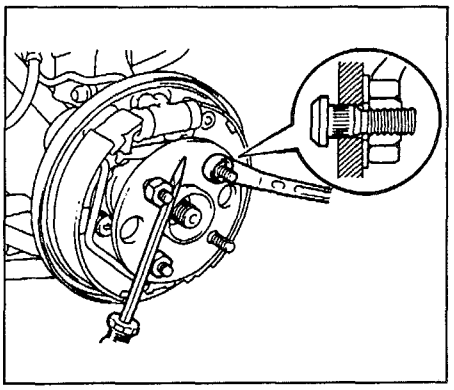

b) While tightening the nut, install the bolt. 5. Install the brake drum. 6. In stall the front wheel and lower the vehicl e.

Rear Suspension (2WD models)

Note: The removal and installation procedures for rear suspension components on 2WD models are similar to the procedures described for 4WD models. Follow the assembly illustrations.

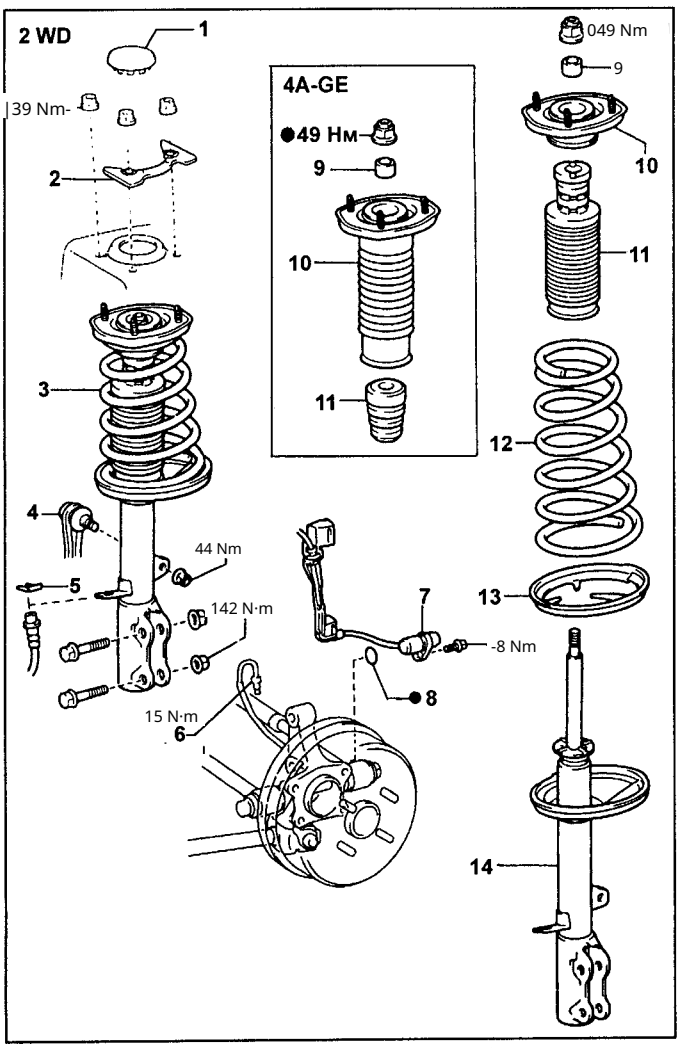

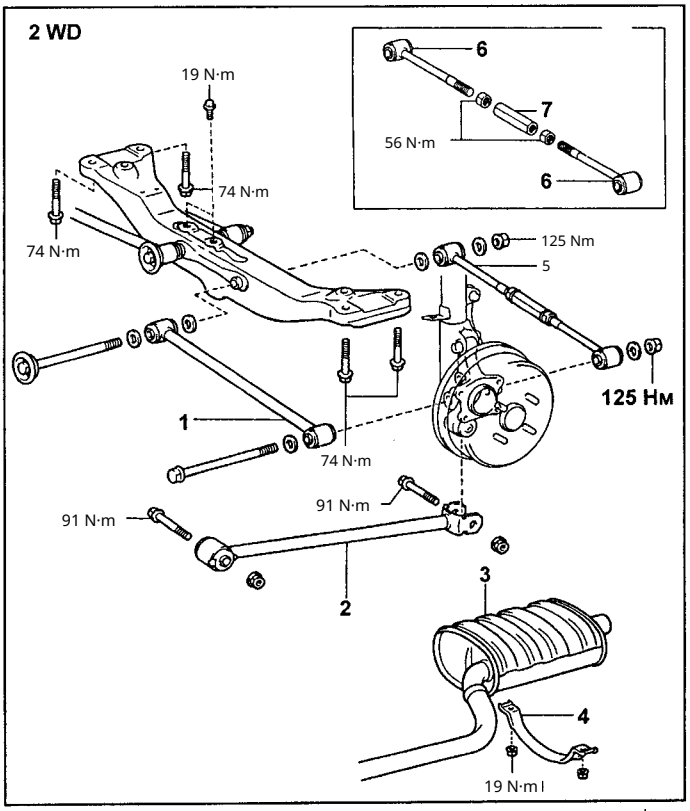

Rear suspension arms. 1 - 1 - transverse arm No. 1, 2 - longitudinal arm, 3 - exhaust pipe, 4 - exhaust pipe mounting bracket, 5 - transverse arm No. 2, 6 - end of transverse arm No. 2, 7 - adjustment bushing.

4 Rear suspension strut. 1 - cap, 2 - amplifier, 3 - rear suspension strut assembly, 4 - anti-roll bar stabilizer strut, 5 - retainer, 6 - brake hose union (4A-FE), 7 - speed sensor (ABS), 8 - O-ring seal, 9 - bushing, 10 - strut upper mount, 11 - compression travel stopper, 12 - spring, 13 - lower spring seat, 14 - rear suspension strut.

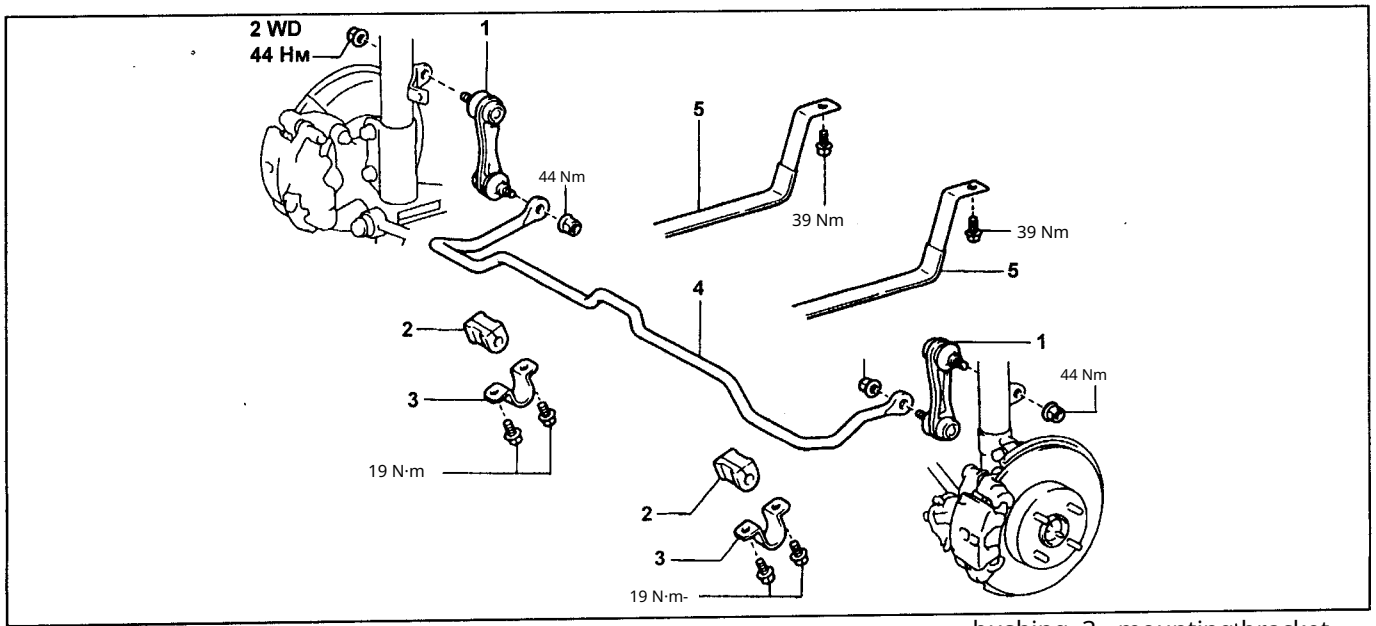

Removal of the anti-roll (stabilizer) bar. 1 - stabilizer link, 2 - stabilizer mount, 4 - anti-roll (stabilizer) bar, 5 - fuel tank mounting strap.

- bushing, 3 - mounting bracket

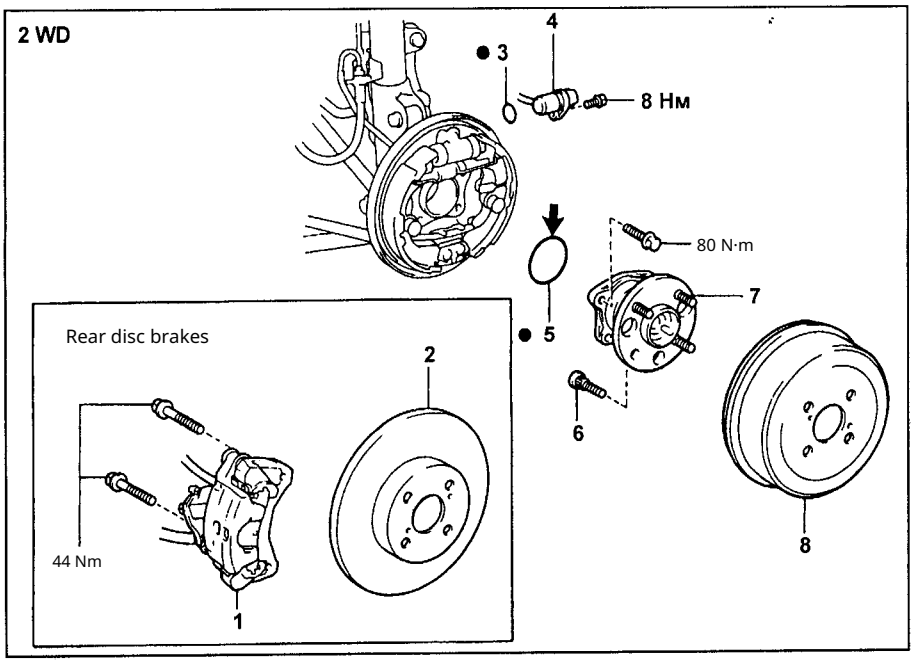

Rear axle hub.
1 - brake caliper,
2 - brake disc,
3, 5 - sealing ring,
6 - hub bolt,
7 - rear axle hub,
8 - brake drum.

Note: apply a grease of appropriate consis tency to the parts indicated by the arrow.

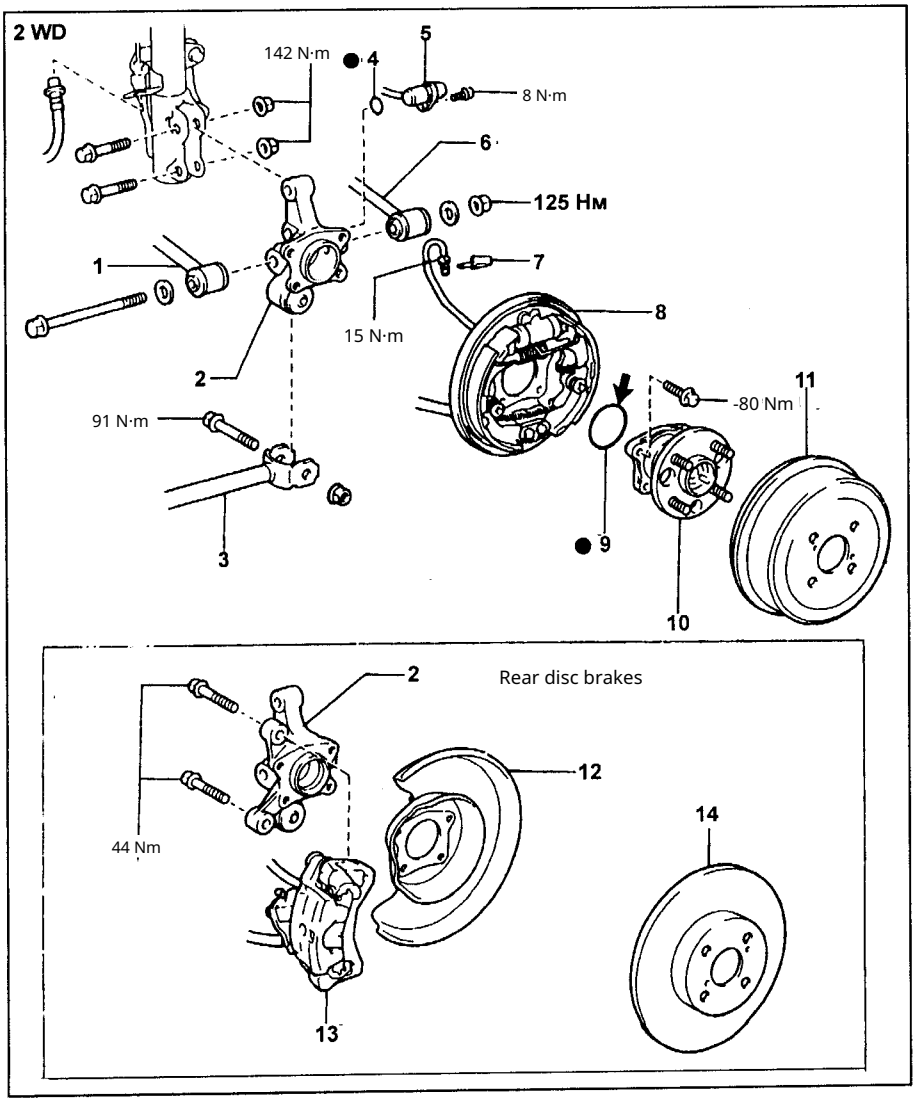

Rear suspension knuckle.
1 - transverse arm No. 1,
2 - knuckle,
3 - longitudinal arm,
4, 9 - O-ring seal,
5 - rotation speed sensor (ABS),
6 - transverse arm No. 2,
7 - retainer,
8 - brake assembly,
10 - rear axle hub,
11 - brake drum,
12 - mud shield,
13 - brake caliper assembly,
14 - brake disc.

Note: apply a grease of appropriate consis tency to the parts indicated by the arrow.

Steering system

Check steering wheel play

With the vehicle stationary and the wheels set in the straight-ahead position, rock the steering wheel from side to side with a slight force. If the play exceeds the permissible limit, carry out repairs. Maximum play.....30 mm....

Power steering belt inspection

power steering pump drive

(See the chapter "Maintenance and General Inspection and Adjustment Procedures".)

Checking the level of working fluid

1. Park the vehicle on a level surface.

2. With the engine OFF, check the level of the working fluid and top up if necessary. Working fluid.....ATF DEXRON® II or III Note: the working fluid level must be within the "MAX" - "MIN" range on the reservoir or dipstick.

3. Warm up the working fluid.
a) Start the engine and set the engine speed to 1000 rpm. b) Turn the steering wheel several times from lock to lock to raise the temperature of the working fluid to 40 - 80°C.

4. Check for the absence of foaming or emulsification of the fluid. If foaming or emulsification is present, bleed the power steering system.

If bleeding produced no results, check for leaks in the system.

5. Check for an increase in the level fluids.
a) Measure the fluid level with the engine running.
b) Turn off the engine, wait a few minutes, and measure the fluid level.

Maximum increase of the fluid level.

.....5 мм

If the increase in fluid level is more than 5 mm, bleed the system.

6. Check the level of the working fluid.

Check of force on on the steering wheel

Note: Before performing the inspection, check the tire pressure, tire type, and tire contact surface.

1. (For models not equipped with a airbag)
Remove the steering wheel cover.
a) Unscrew the steering cover bolt-
Remove the wheel and take it off.
b) Disconnect the connector. 2. (For models equipped with an airbag).
Remove the steering wheel cover (see the "Supplemental Restraint System (SRS)" chapter).

Attention: store the cover with the front surface facing upward.

3. Determine the force on the steering wheel.
wheel.
a) Park the vehicle on a level surface and set the steering wheel so the vehicle is pointed straight ahead.

b) Start the engine and set the idle speed. c) Fit a torque wrench to the steering wheel.

d) Measure the force on the steering wheel in both directions. Maximum allowable force..... e) Check the tightening ..... 9.8 N·m
ng of the steering wheel retaining nut.
Tightening torque ...
..... 34 N·m

e) Install the steering wheel in the direction of travel so that it is facing straight ahead. 4. (For models not equipped with an airbag). Install the steering wheel cover. a) Connect the connector.
6) Install the steering wheel cover and tighten the bolt.

5. (For models equipped with with a safety loop).
Install the steering wheel cover.
(see chapter "Safety System (SRS)").

Power steering fluid pressure check

1. Connect the pressure gauge.
a) Unscrew the banjo bolt, remove the gasket, and disconnect the pressure line from the housing.
from the pump.
b) Using adapters, connect the pressure gauge as shown in the illustration.

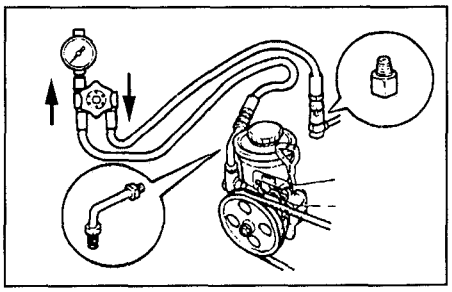

4A-FE, 7A-FE.

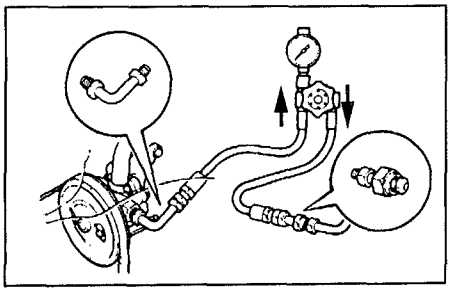

4A-GE.

Warning: when installing, the valve of the pressure gauge must be open.

2. Bleed the power steering system.

3. Warm up the working fluid.
a) Start the engine and set the idle speed.
b) Turn the steering wheel from lock to lock two or three times to warm the working fluid. Working fluid temperature... ..... 75–80°C

4. Check the working fluid pressure with the pressure gauge valve closed. Close the pressure gauge valve and measure the pressure.
Minimum allowable pressure... ..... 6400–6860 kPa
Attention:
- Do not keep the faucet closed for more than 10 seconds.
- Do not allow the temperature of the working fluid to become too high.

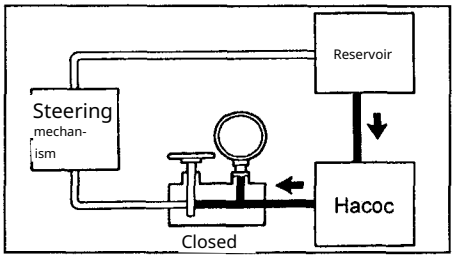

5. Check the fluid pressure with the gauge valve open.
a) With the engine idling, open the valve completely.
b) Measure the fluid pressure at engine speeds of 1000 rpm and 3000 rpm. Maximum allowable pressure difference: 490 kPa Note: Do not turn the steering ..... wheel.

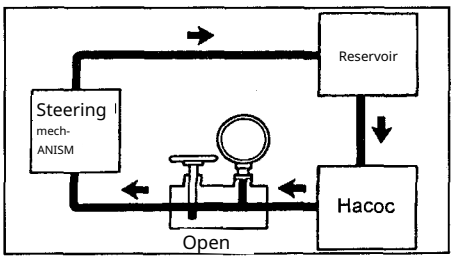

6. Check the fluid pressure when the steering wheel is turned to the end position.

With the engine idling and the valve fully open, turn the steering wheel to the maximum angle. Minimum allowable pressure..... 6400 - 6860 kPa

.....

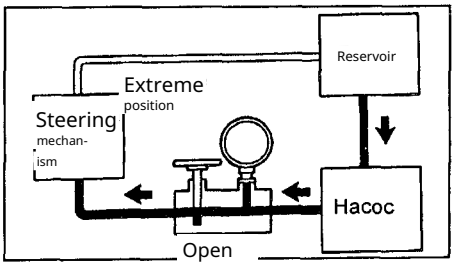

Attention:
- Do not hold the steering wheel in the extr eme position for more than 10 seconds.
- Do not allow the working fluid temperature t o become too high.

7. Disconnect the pressure gauge and rec onnect the pressure supply hose to the p ump housing. Tighten the banjo bolt.

Tightening torque. ..... 54 N·m
8. Bleed the power steering system.

Power steering system bleeding

1. Check the level of the working fluid in the reservoir.
2. Raise the front of the vehicle and place it on stands. Note: try not to spill fluid from the reservoir.

3. With the engine off, turn the steering whe el from lock to lock several times.

4. Lower the vehicle.
5. Start the engine and set it to 1000 rpm . Turn the steering wheel from lock to loc k, holding it at each extreme position for 2–3 seconds. Repeat this procedure thre e or four times. 6. Turn off the e ngine. 7. Check for the ab sence of foaming or emulsification of the fluid. If foaming or emulsification is pres ent, inspect the system for leaks. 8. Chec k the operating fluid level.

Steering gear

Removal

1. Raise the vehicle with a jack and remove the front wheels. Tightening t orque.. ..... 103 N·m
2. Disconnect the tie rod ends from the steer ing knuckle arms.
   a) Remove the cotter pins and unscrew the nuts.
   b) Using a special tool, separate the tie rod ends from the steering knuckle ar ms. Caution: do not damage t he dust boot.

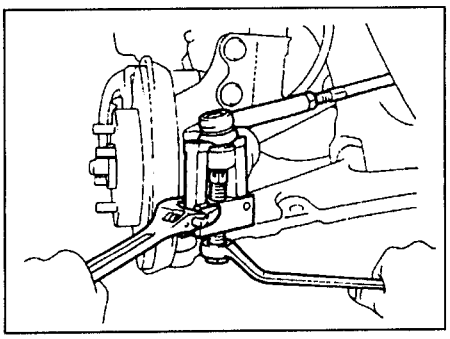

3. Remove the driveshaft (see the "Driv eshaft" chapter).
4. Disconnect the exhaust pipe from t he muffler inlet pipe. Note: secure the pipe to the vehicle body wit h wire.
5. Unscrew the bolts and remove the co ver. 6. Disconnect the universal joint. a) Loosen the bolt securing the joint to th e steering column shaft.

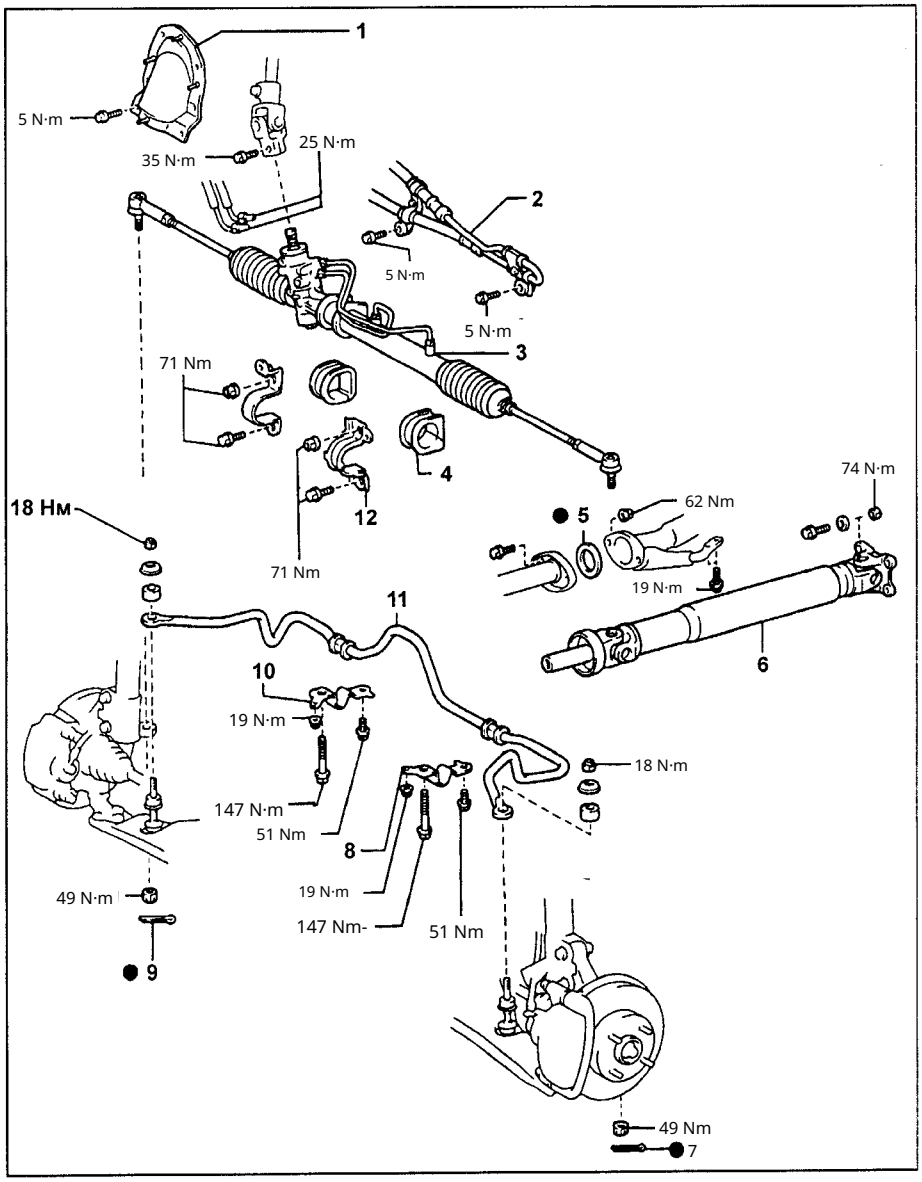

Removal of the steering gear. 1 cover, 2 pressure pipe (7A-FE), 3 steering gear assembly, 4 bushing, 5 gasket, 6 universal j oint, 7, 9 cotter pin, 8, 10 stabili zer mounting bracket, 11 stabilizer bar, 12 steering gear mounting bracket.

   b) Unscrew the bolt securing the joint to the worm.
   c) Mark the joint and the worm and disc onnect the joint.
7. Disconnect the return and pressure piping.

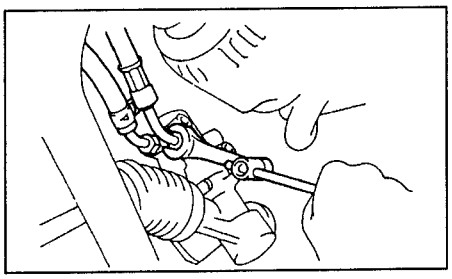

8. Remove the anti-roll bar (see the rel evant section of the "Suspension" chap ter). 9. Unscrew the bolts of the compressor pipe mounting brac ket. 10. Unscrew the bolts of the steer ing gear mounting bracket and remov e the steering gear assembly.

Replacement of tie rods

1. Disconnect the tie rod ends from the s teering knuckle arms. 2. Loosen the locknut and unscrew the tie rod end.

3. Remove the tie rod.
   a) Loosen the clamps and remove the tie rod boot.

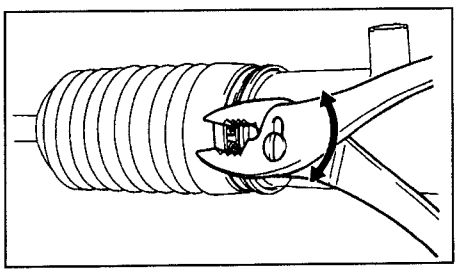

Attention:
- Be careful not to damage the boot.
- Mark the right and left boots with distingui shing marks so they are not confused during installation.

b) Bend back the bent sections of the locki ng washer.

Warning: do not damage the rack.

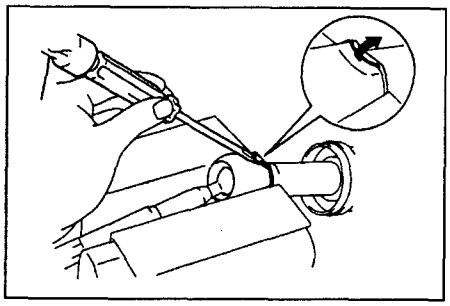

c) Unscrew the tie rod. Remove the l ocking washer.

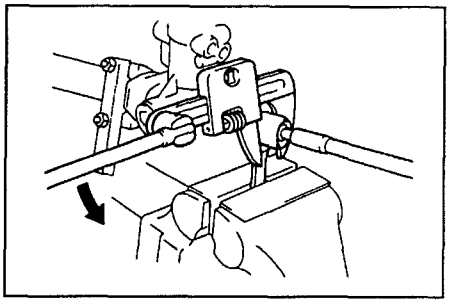

4. Install the new tie rod. a) Install the new locking washer.

b) Apply a grease (consistent grease) to the ball joint of the tie rod.

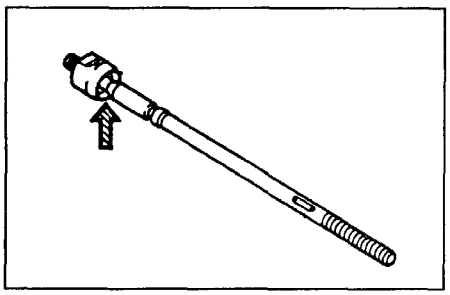

c) Install and tighten the tie rod.

d) Using a brass rod and a hammer, bend the locking washer.

Attention: do not damage the rack.

5. Install the boot and clamps.

a) make sure that the hole in the rack is not clogged with grease.

Note: if the hole is clogged, the pressure that builds up inside the cover when the steering wheel is turned may damage t he cover.

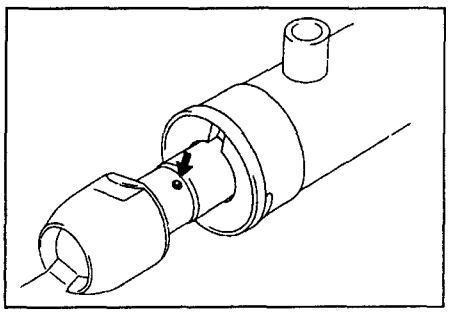

b) Install the boot and the clamps. Se cure the boot with the large clam p. 6. Install the tie rod end. a) Thread t he locknut and the end onto the tie r od.

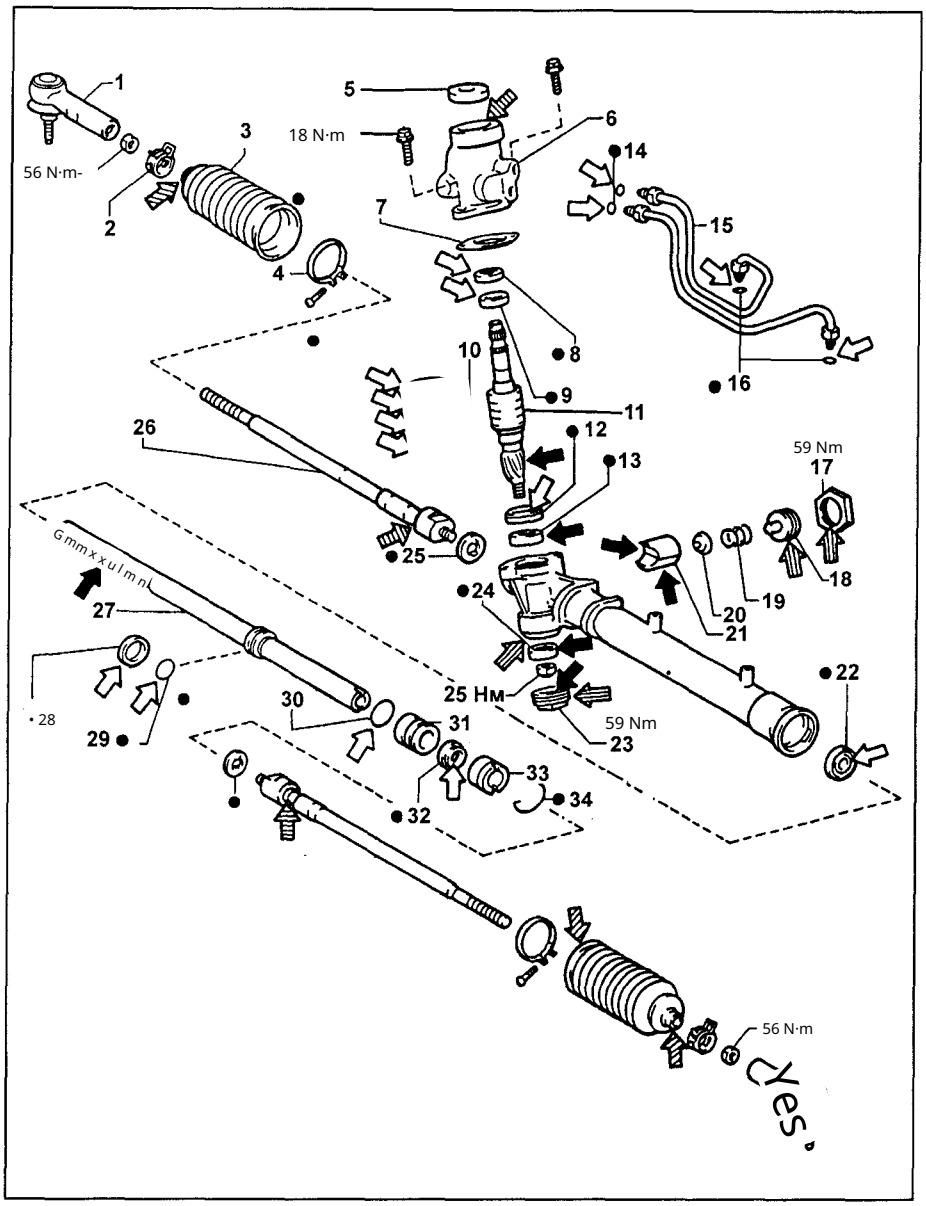

Steering mechanism. 1 - tie rod end, 2, 4 - clamp, 3 - cover, 5 - dust boot, 6 - w orm housing with control valve, 7 - gasket, 8, 12, 22, 32 - oil seal, 9, 13, 24 - bearin g, 10 - Teflon ring, 11 - worm with control valve, 14, 16, 29, 30 - O-ring seal, 15 - p ower steering hydraulic lines, 17 - locknut, 18 - guide cover, 19 - spring, 20 - sprin g seat, 21 - rack guide, 23 - guide bearing nut, 25 - retaining washer, 26 - steering tie rod, 27 - steering rack, 28 - sealing ring, 31 - rack bushing, 33 - limiting bushin g, 34 - wire. Note: during assembly, apply grease to the parts indicated by the arr ows.

, -

- power steering fluid,

- silicone grease,

- sealant.

c) Make sure the boot is not twisted an d secure it with a small clamp. 7. Con nect the tie rod ends to the steering knu ckle arms. Attention: after replacing the tie rods, adjust the front wheel align ment wheel alignment angles.

Installation

1. Installation is carried out in the reve rse order of remo val. Note: the installation is performed with the steering wheel turned fully to the left.

2. Bolt and nut tightening torques see the assembly illustration. 3. When instal ling the steering mechanism, align the mar ks made during removal.

4. Fill the working fluid and bleed the p ower steering system.

5. Check for the absence of leaks in the sys- topic.

6. Check the front wheel alignment. 7. Check the steering wheel play. 8. Ens ure that the steering wheel position co wheels rresponds to the direction movement.

Power steering pump (4A-FE, 7A-FE)

Removal

Note: before removal, drain the power steering fluid.

1. Unscrew the banjo bolt and disconnect the pressure line.
2. Remove the clamp and disconnect the return hose.
3. Remove the drive belt.
4. Disconnect the vacuum hoses from the idle speed increase valve.
5. Unscrew the mounting bolts and remove the pump.

Installation

Note: see the assembly illustration "Removing the power steering pump (4A-GE)" for the bolt and nut tightening torques.
1. Install the pump and temporarily secure it with bolts.
2. Connect the vacuum hoses.
3. Install the drive belt and adjust its tension (see chapter "Maintenance and General Inspection and Adjustment Procedures").
4. Tighten the pump mounting bolts.
5. Connect the return hose and secure it with its clamp.
6. Connect the pressure pipeline and tighten the banjo bolt.
7. Fill the power steering fluid reservoir and bleed the system.
8. Check that there are no leaks of working fluid.

Power Steering Pump Removal and Installation (4A-GE)

When removing and installing the pump, follow the assembly illustration "Removal of the Power Steering Pump (4A-GE)".

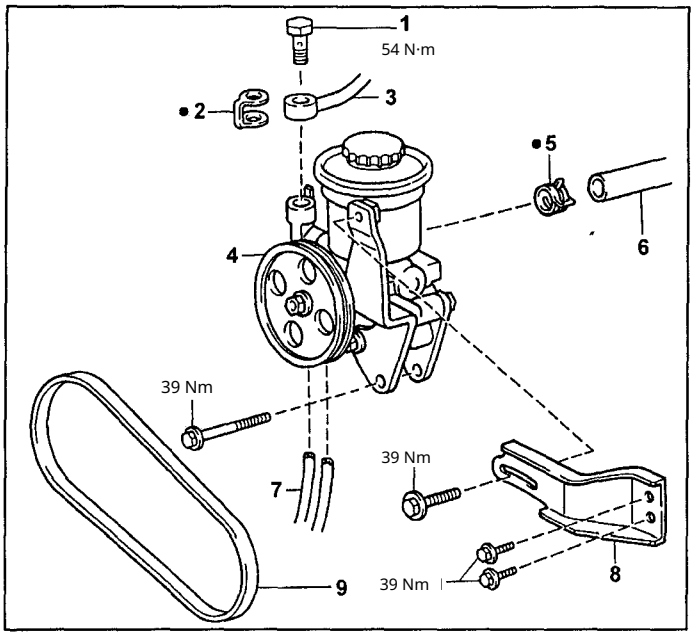

Removal of power steering pump (4A-FE, 7A-FE). 1 - banjo bolt, 2 - gasket, 3 - pressure line, 4 - pump assembly, 5 - clamp, 6 - return line, 7 - vacuum hoses, 8 - pump mounting bracket, 9 - drive belt tococa.

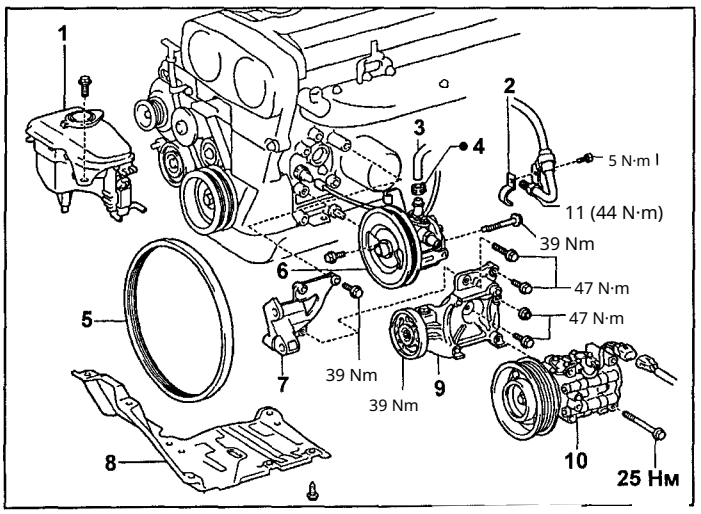

Removal of the power steering pump (4A-GE). washer - reservoir, 2 - discharge pipe bracket, 3 - return pipe, 4 - clamp, 5 - drive belt, 6 - power steering pump assembly, 7 - pump mounting bracket, 8 - lower engine protection cover, 9 - tensioner pulley assembly with bracket, 10 - air conditioning compressor, 11 - discharge pipe.

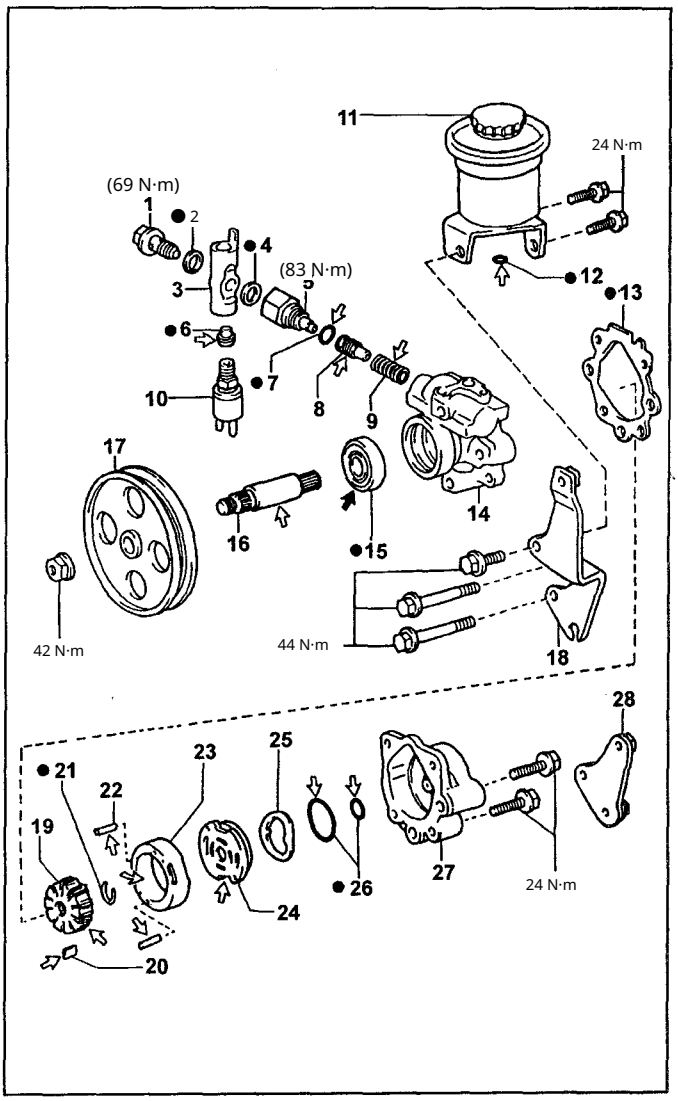

Power steering pump (4A-FE, 7A-FE). 1 - banjo bolt, 2, 4, 13 - gasket, 3 - fitting adapter for discharge pipe, 5 - discharge pipe fitting, 6 - fitting seat, 7, 12, 26 - O-ring, 8 - flow regulator, 9 - spring, 10 - idle speed increase valve, 11 - reservoir, 14 - pump housing, 15 - oil seal, 16 - pump shaft, 17 - pulley, 18, 28 - bracket, 19 - rotor, 20 - vane, 21 - snap ring, 22 - locating pin, 23 - stator ring, 24 - rear plate, 25 - wave washer, 27 - housing cover. Note: during assembly, apply to the parts indicated by the arrows:

⬅ - grease,
⇦ - power steering fluid.

Steering column

Removal

1. Remove the steering wheel cover
   a) Unscrew the bolt.
   b) Remove the cover and disconnect the co nnector.

(For vehicles equipped with airbags)

Remove the steering wheel cover (see the "S upplemental Restraint System (SRS)" chap ter). Warning: store the steering wheel cover with the front face of the wheel outward up.

2. Remove the steering wheel.
   a) Unscrew the nut. Apply marks to the main shaft and the steering wheel.
   b) Using a special tool, remove the steer- ing wheel.
3. Remove the front door sill trim.
4. Remove the side interior trim. 5. Re move the lower trim of the instrument c luster.
6. Remove the lower trim panel on the driver's si de.
7. Remove the air duct.
8. Remove the steering column cover.
9. Unscrew the mounting screws, disconn ect the connector, and remove the combin ation switch.
10. Remove the steering column assembly.
    a) Disconnect the connectors.
    b) Loosen the bolt of universal joint No. 1 on the steering column side. column.
    c) Unscrew the bolts and remove the cover. d) Unscrew the bolt securing u niversal joint No. 1 to the worm. Mak e marks on the joint and the worm an d disconnect the universal joint. e) Un screw the mounting bolts and nuts an d remove the steering column. R

emoving the ignition lock 1. Drill out the bolts with tapered heads and e xtract them from the bracket.

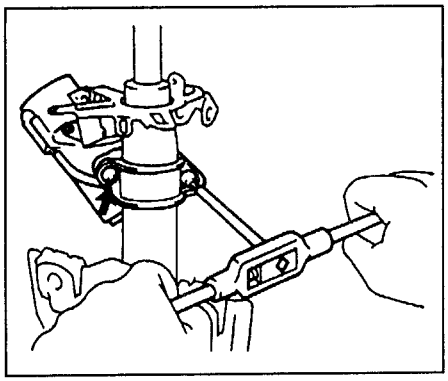

2. Remove the ignition lock bracket from the steering column tube. Whe n installing the ignition lock, use new bol ts with tapered heads. Tighten them until the heads shear off.

Ignition lock inspection

1. Check the ignition lock bracket— mounting.

Make sure the steering wheel lockin g mechanism functions properly.

2. If necessary, replace the ignition lock cyl inder.
   a) Turn the ignition key to the "ACC" position.

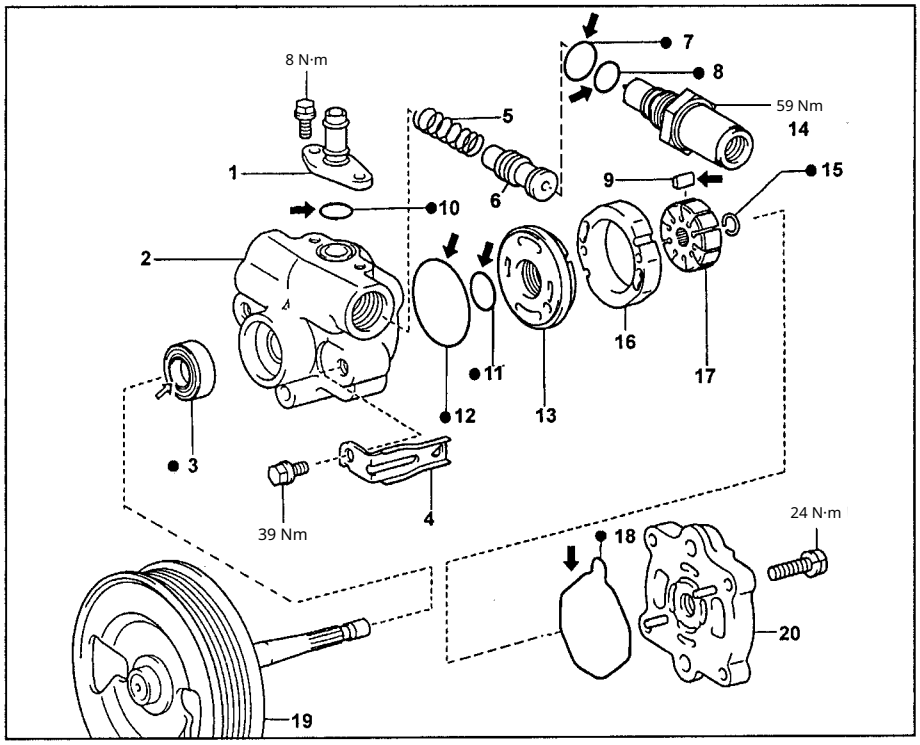

Power steering pump (4A-GE). 1 - return pipe fitting, 2 - pump housing, 3 - oil seal, 4 - bracket, 5 - spring, 6 - flow regulator, 7, 8, 10, 11, 12 - O-rings, 9 - vane, 13 - front plate, 14 - pressure pipe fitting, 15 - circlip, 16 - stator ri ng, 17 - rotor, 18 - gasket, 19 - pump shaft assembled with pulley, 20 - hou sing cover. Note: during assembly, apply to the parts indicated by the arro ws: grease — power steering fluid.

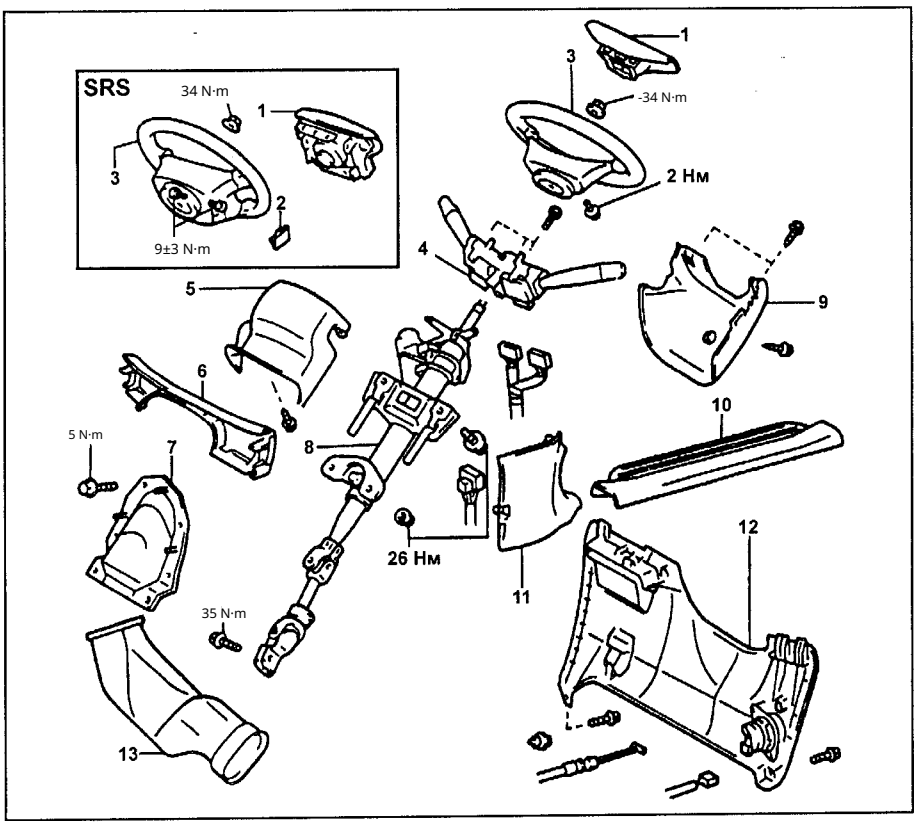

Removal of the steering column. 1 Steering wheel cover, 2 Steering wheel side c over, 3 Steering wheel, 4 Combination switch assembly, 5 Upper steering colum n shroud, 6 Lower instrument cluster trim, 7 Cover, 8 Steering column assembly, 9 Lower steering column shroud, 10 Front door sill trim, 11 Side interior trim, 12 Lower driver-side trim panel, 13 Air duct.

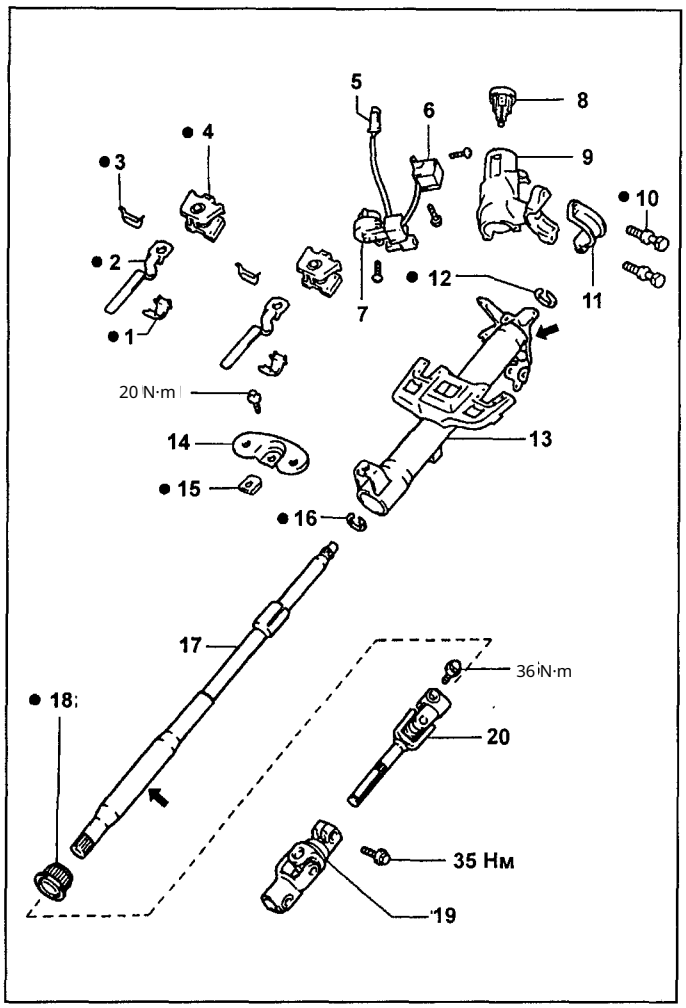

Steering column without tilt adjustment. 1 - guide plate of the passive safety system, 2 - plate of the passive safety system, 3 - guide retainer, 4 - support insert of the passive safety system, 5 - key-present sensor in the ignition lock, 6 - electromagnetic valve for ignition key locking, 7 - contact assembly of the ignition switch, 8 - ignition lock cylinder, 9 - ignition lock bracket, 10 - bolt with conical head, 11 - clamp of the ignition lock bracket, 12, 16 - snap ring, 13 - steering column tube, 14 - lower mounting bracket of the steering column, 15 - retainer, 17 - main shaft of the steering column, 18 - bushing, 19 - universal joint No. 1, 20 - universal joint No. 2.

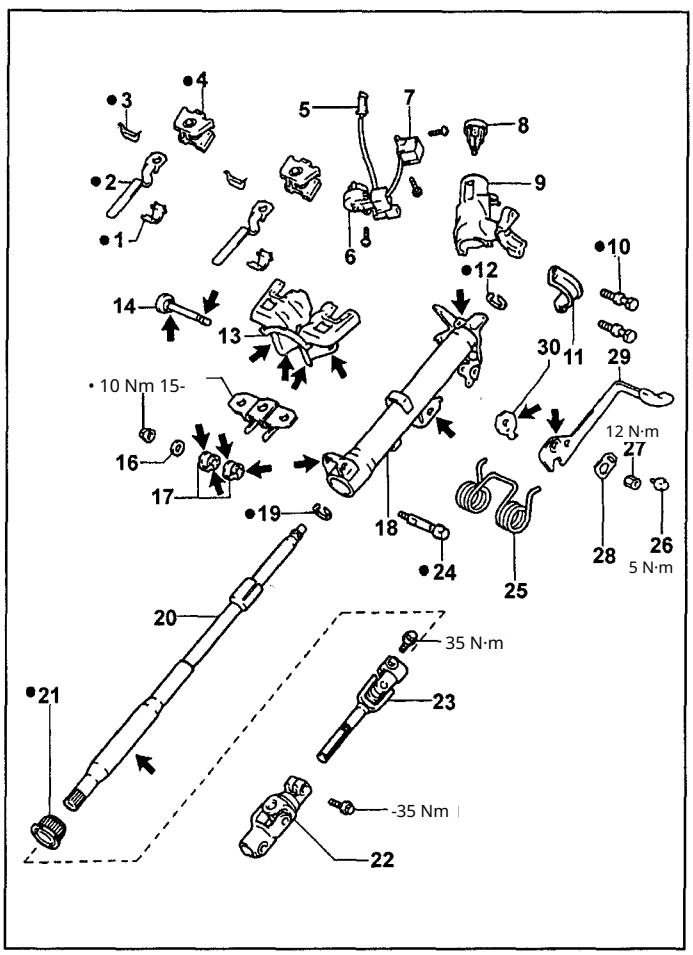

Steering column with tilt adjustment. 1 - guide plate of the passive safety system, 2 - plate of the passive safety system, 3 - guide retainer, 4 - support insert of the passive safety system, 5 - key-present sensor in the ignition lock, 6 - contact assembly of the ignition switch, 7 - electromagnetic valve for ignition key locking, 8 - ignition lock cylinder, 9 - ignition lock bracket, 10 - bolt with conical head, 11 - clamp of the ignition lock bracket, 12, 19 - snap ring, 13 - bracket of the passive safety system, 14 - bolt pin, 15 - lower pin, 15 - lower lower lower mounting bracket of the steering column, 16 - washer, 17, 21 - bushing, 18 - steering column tube, 20 - main shaft of the steering column, 22 - universal joint No. 1, 23 - universal joint No. 2, 24 - bolt of the lower steering column mounting bracket, 25 - spring, 26 - bolt, 27 - nut, 28 - plate, 29 - tilt adjustment lever, 30 - auxiliary tilt adjustment lever.

Note: when assembling, apply grease of suitable consistency to the parts indicated by the arrows.

b) Depress the locking pin with a thin rod or screwdriver and remove the lock cylinder.

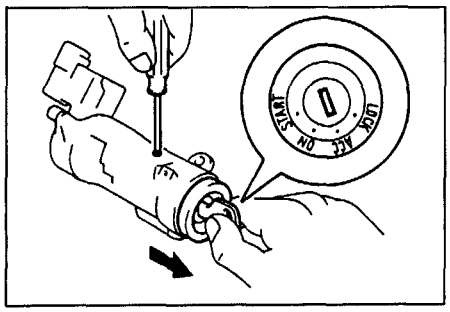

c) Turn the ignition key to the "ACC" position and install the new ignition lock cylinder into the bracket. Make sure the locking pin has engaged.

g) Ensure that the steering wheel locking mechanism operates properly.

Installation

1. Installation is carried out in the reverse order of removal.
2. See the tightening torques for bolts and nuts that secure components on the assembly illustration "Removal of the steering column".
3. When installing, align the marks made during removal. Note: install the tilt-adjustable steering column with the tilt adjustment lever fully raised upward.

Brake system

Bleeding of the brake system

Note: after any work that may have allowed air into the brake system, perform bleeding of the system.

Warning: do not allow Brake Fluid to come into contact with painted surfaces. If brake fluid gets on a painted surface, wash it off immediately.

immediately.

1. Fill the brake fluid reservoir

friction.

Brake fluid... DOT 3 or DOT 4 2. Bleed the master brake cylinder.

Note: If the master brake cylinder has been removed or if the reservoir has been left empty, remove air from the master brake cylinder.

a) Disconnect the brake lines from the master brake cylinder.
b) Press the brake pedal gently and hold it down.
c) Plug the outlet ports of the brake cylinder with your fingers and release the brake pedal.
d) Repeat steps "b" and "c" three to four times. 3. Bleed the brake system.
a) Attach a vinyl tube to the bleeder nipple of the wheel brake cylinder.

b) Press the brake pedal several times, then while holding the pedal down, loosen the bleeder nipple.

c) When brake fluid stops coming out, tighten the nipple, then release the brake pedal.
g) Repeat the operations described in items "b" and "c" until no more air bubbles appear in the brake fluid being discharged. d) Repeat the bleeding procedure for each wheel.

4. Check the level of brake fluid in the reservoir and top up the fluid if necessary.

Brake fluid... DOT 3 or DOT 4

Inspection and adjustment brake pedal

1. Remove the floor mat.

2. Make sure that the pedal height is within the specified range.
is adjusted according to the illustration.
Pedal height from the floor covering

floor: 138.7 - 148.7 mm 2. If necessary, adjust the pedal height.

a) Disconnect the switch connector.
for the stop lights.
b) Loosen the locknut of the stoplight switch and remove the stoplight switch.

c) Loosen the rod locknut. d) Adjust the pedal height by turning the pedal rod.
e) Tighten the rod locknut.

Tightening torque. ..... 26 N·m

e) Install the stoplight switch and turn it until it contacts the pedal travel limiter.

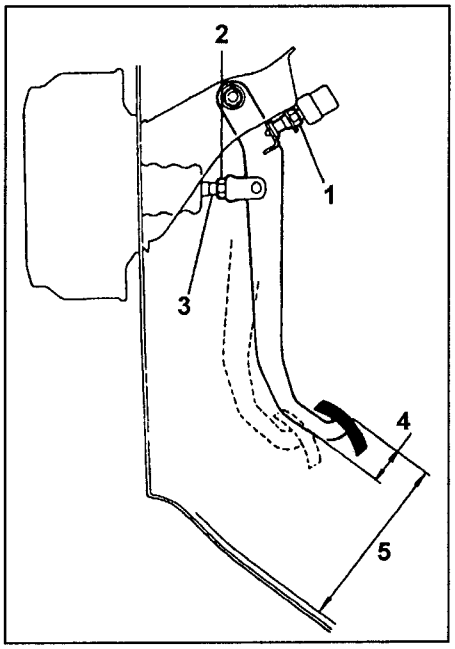

Brake pedal adjustment. Stoplight switch, lock
1 - nut of the rod, 3 rod,
2 - -
4 - pedal free play, 5 - pedal height from the floor covering.

g) Unscrew the stoplight switch by one turn.
3) Check the distance between the stoplight switch and the pedal travel limiter. 0.5–2.4 mm Distance i) Tighten

the locknut of the stoplight switch. .....

Tightening torque ..... 26 N·m
k) Connect the connector of the switch-
of the stoplight switch.
l) Make sure the stoplights illuminate when the brake pedal is depressed and go out when the brake pedal is released.

m) After adjusting the pedal height, check the pedal free play.
Note: if the distance between the by the stoplight switch and pedal travel limiter the brake pedal has been adjusted cor- rectly, the pedal free play will conform to the technical data.

3. Checking the pedal free play.

a) Stop the engine and press the pedal several times to eliminate the vacuum in the power booster.

b) Press the pedal until resistance begins to be felt. Pedal free play

..... 1 - 6 mm

If the pedal free play does not correspond to the specified value, check the distance between the stop

light switch a

nd the brake pedal travel limiter. If it matches the technical data, then inspect the brake system for faults.

presence of faults.

4. Checking pedal reserve travel. Release the parking brake lever. With the engine running, press the pedal and measure the pedal reserve travel. Brake pedal reserve travel from the floor covering under a force of 500 N.....not less than 75 mm .....

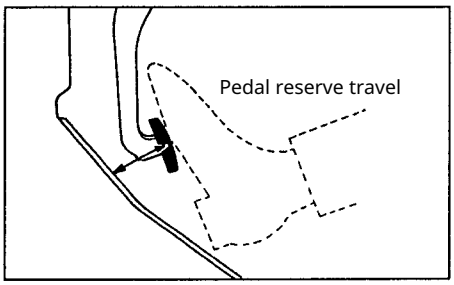

If the brake pedal travel does not match the specified value, diagnose the brake system fault.

Inspection and adjustment of the parking brake

1. Check the travel of the parking brake lever. Pull the parking brake lever fully and count the number of clicks. Movement of the parking brake lever under a tension force of 196 N... 4–7 clicks 2. Adjust the parking brake if necessary.

.....

a) Adjust the clearances in the parking brake drums:
- remove the rear wheel and the brake drum.
- measure the internal diameter of the drum and the diameter formed by the brake shoe linings.

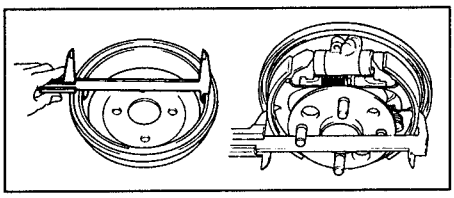

- ensure that the difference between the diameters does not exceed 0.6 mm. If it does not comply, adjust this distance using the adjuster bolt.

- install the brake drums and
wheels.
b) Remove the center console. c) Loosen the locknut and adjust the tension of the parking brake cable to the specified value.

Movement of the parking brake lever under a tension force of
196 N.....4–7 clicks 4–7 clicks g) Tighten

the locknut. T

ightening torque..5.5 N·m .....

d) Several times tighten and release the brake cable tension. parking brake lever
Make sure that
The parking brake is normal and the parking brake indicator lights up and goes out.
e) Install the center console.

Brake pedal

Note: When removing and installing the bra ke pedal, follow the illustration "Brake Remo val". pedal

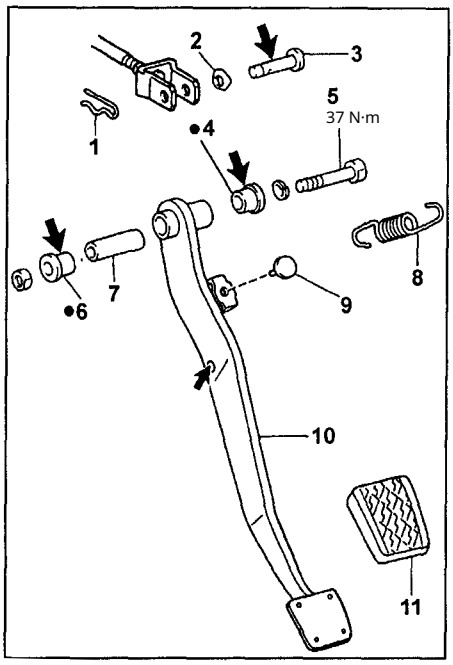

Removal of the brake pedal. 1 - cotter pin, 2 - washer, 3 - fork shaft, 4, 6 - seat, 5 - bolt, 7 - bushing, 8 - spring, 9 - spacer, 10 - brake pedal, 11 - pad.

Main brake cylinder

Removal

Note: perform the removal as shown in th e figure "Removal of the master brake cyl inder".

Adjusting the length of the vacuu m booster pushrod

1. Install a new gasket on the master brak e cylinder.

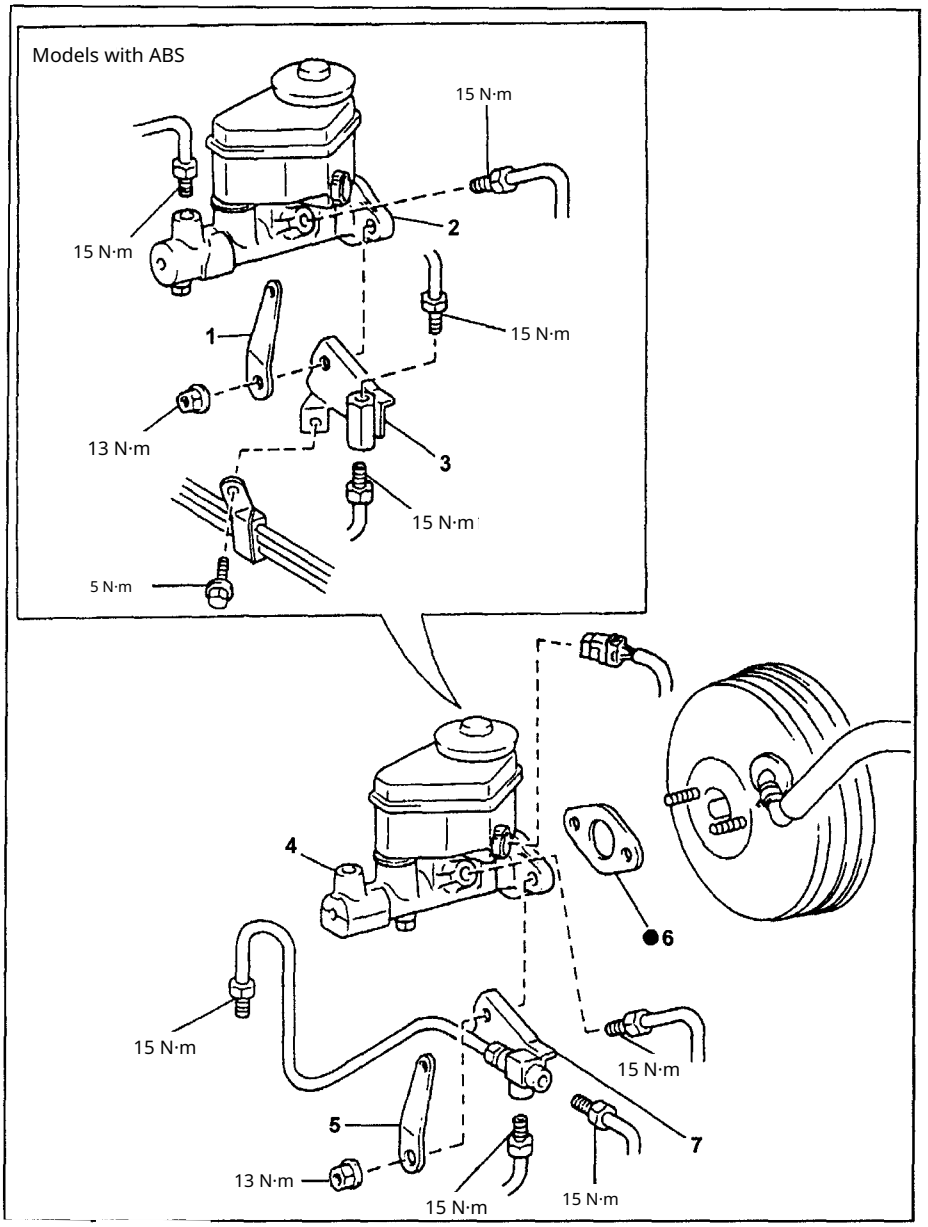

Removal of the master brake cylinder. 1, 5 bracket, 2, 4 brake cyli - master nder assembly, 3 - adapter, 6 - gasket, 7 - adapter.

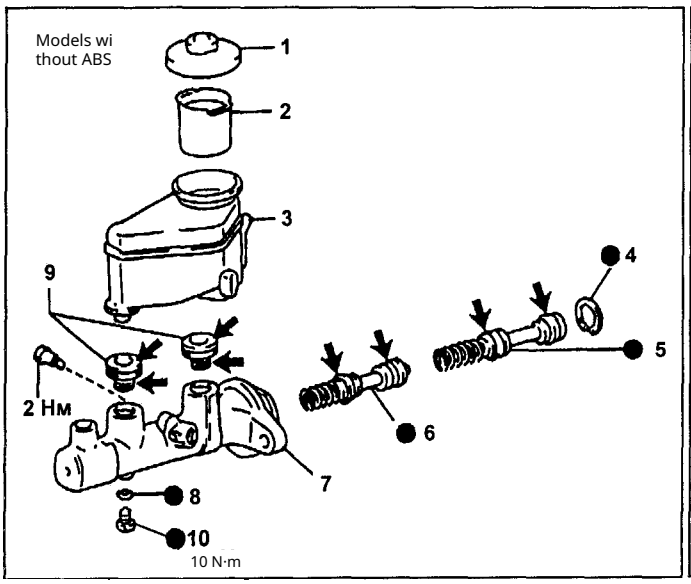

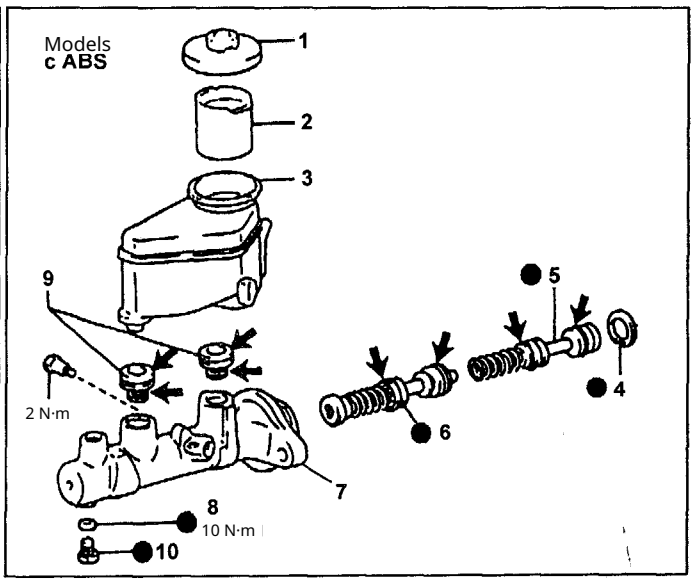

Master brake cylinder. 1 - cap, 2 - mesh filter, 3 - reservoir, 4 - retaining ring, 5 - piston, 6 - piston No. 2, 7 - cylin No. 1, der housing, 8 - gasket, 9 - rubber bushing, 10 - locking bolt. Note: when assembling, apply greas e to the surfaces indicated by the arrows.

2. Install the adjustment tool onto the gasket, then lower the adjustment screw until it lightly touches the piston.

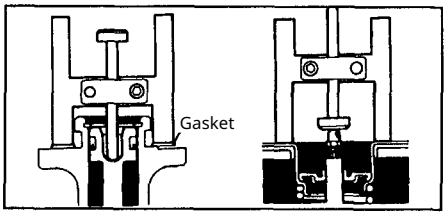

3. Flip the adjustment tool over and install it onto the brake booster.

4. Measure the gap between the end of the brake booster rod and the head of the adjustment screw.
Nominal clearance ..... 0.0 mm
5. If the gap does not match the specified value, adjust the rod length as shown in the illustration.

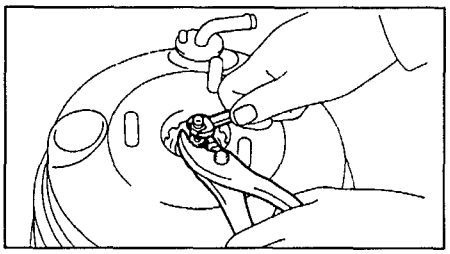

Installation
1. Installation is performed in the reverse order of removal (see the figure "Removal of the Master Brake Cylinder"). 5. Fill the reservoir with brake fluid and bled the brake system. 6. Check for leaks. 7. Inspect and adjust the brake pedal.

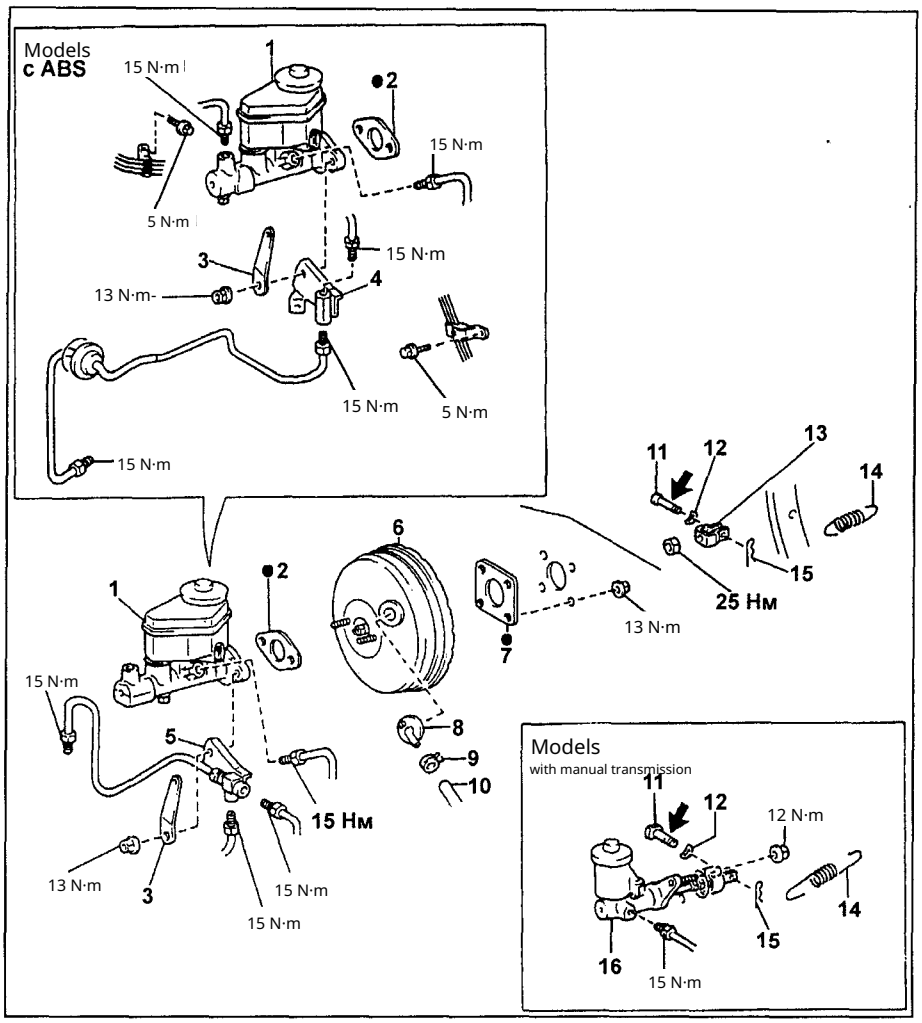

Removal of the brake vacuum booster. 1 - master brake cylinder assembly, 2 - gasket, 3 - bracket, 4, 5 - adapter, 6 - brake vacuum booster assembly, 7 - gasket, 8 - check valve, 9 - clamp, 10 - hose, 11 - fork shaft, 12 - washer, 13 - fork, 14 - spring, 15 - cotter pin, 16 - master cylinder of the clutch release actuator.

Vacuum Booster brakes

Checking the operation of the vacuum booster

1. Press the brake pedal several times with the engine off and make sure the pedal travel does not change.

2. Press the brake pedal and start the engine. If the brake pedal goes down smoothly, the vacuum booster is operational. 3. Check the vacuum booster for airtightness.

a) Start the engine and stop it after one or two minutes of operation. Slowly press the brake pedal several times. If the pedal drops lower on the first press than on the second and third, the vacuum booster is airtight.

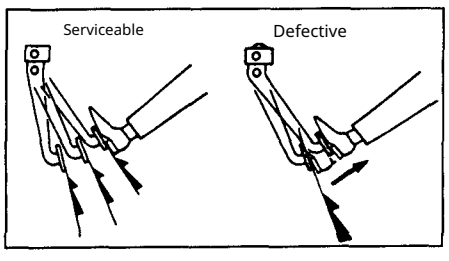

6) Press the brake pedal with the engine running and stop the engine while holding the pedal down. If the distance between the floor and the depressed pedal does not change for thirty seconds, the vacuum booster is airtight.

3. Checking the vacuum booster using pressure gauges.
a) Connect the pressure gauges and the vacuum gauge as shown in the illustration and remove the air from the system.

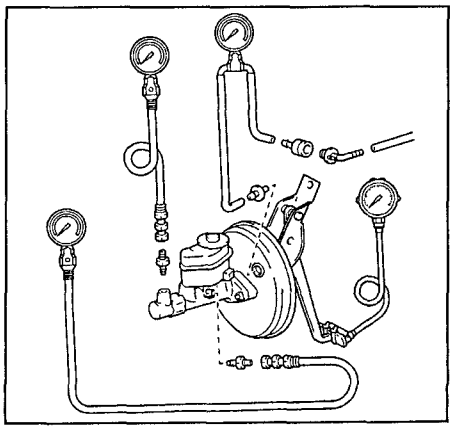

b) Check for leaks.
Start the engine. Stop engine, when the vacuum reaches approximately 500 mmHg.
After stopping the engine for 15 seconds the vacuum does not drop. b) Check for leaks with no load.

Start the engine and press the brake pedal with a force of 196 N. Stop the engine when the vacuum reaches approximately 500 mmHg. After stopping the engine for 15 seconds the vacuum drop will be no more than 25 mmHg. c) Check with the booster not operating.

Stop the engine. Make sure that the vacuum is 0 kPa. Check the brake fluid pressure at various pedal application forces (see the table "Allowable Brake Fluid Pressure Values with Booster Disabled").

Table. Allowable brake fluid pressure values with the booster disabled (MPa).

Pedal application force Booster brake pedal, N	9 inches
200	0,8 - 1,2
295	1,6 - 2,0

d) Check the booster operation. Start the engine. Create a vacuum of 5 00 mm Hg. Check the pressure at diffe rent braking pedal forces (see the tabl e "Permissible brake fluid pressure val ues with booster engaged").

Table. Permissible values of Brake fluid pressure with booster engaged (MPa).

Pressing force on brake pedal, H9 inches	Booster
50	1,6 - 1,9
100	4,3 - 4,6
150	7,1 - 7,4
200	7,7 - 8,1

Check the check valve 1. Remove the c heck valve and make sure that air flows from the direction of the engine and do es not flow in the opposite direction. Re place if necessary valve.

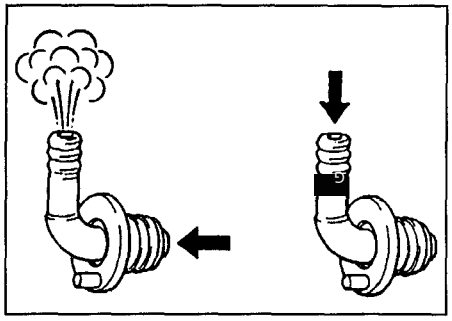

Removing the brake vacuum booster

Note: remove and install the brake vacuum booster as shown in the figure "Removing the vacuum booster"

of brakes

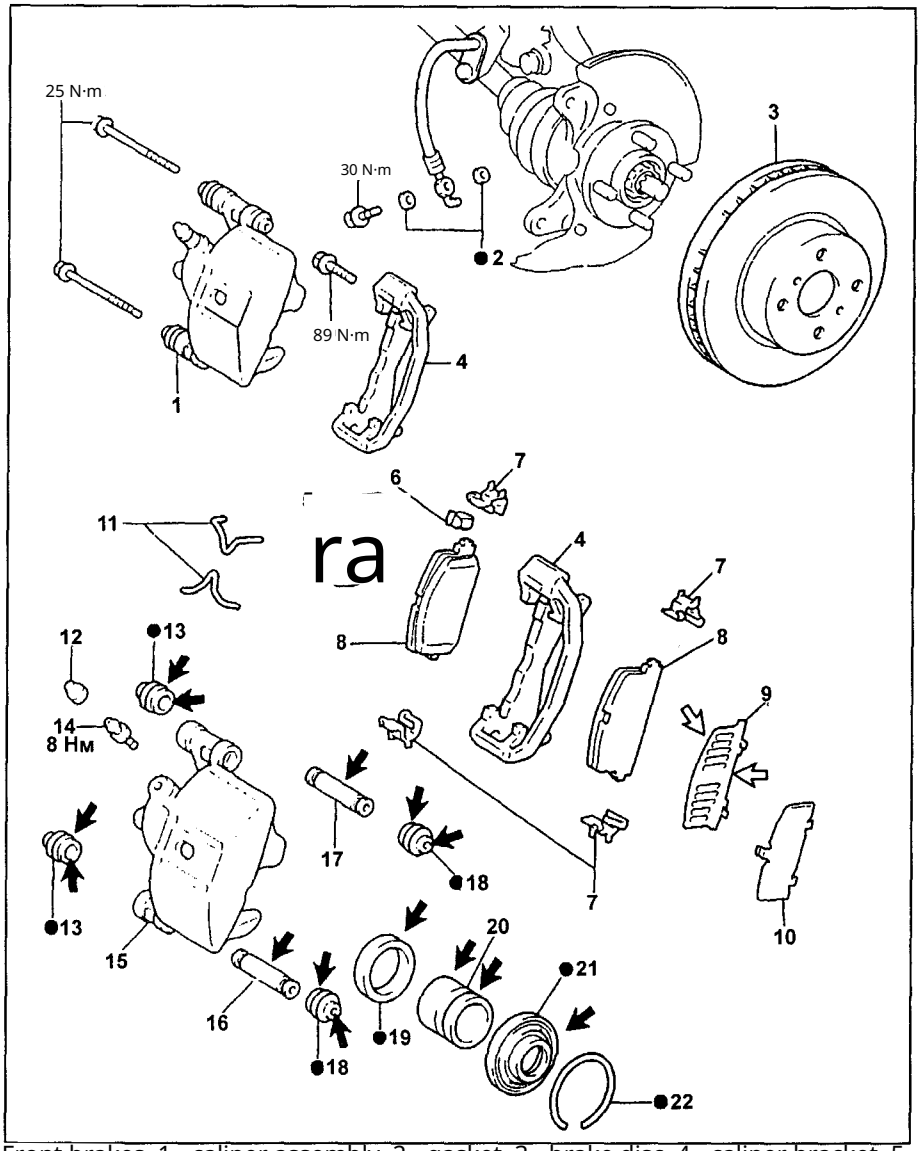

Front brakes. 1 - caliper assembly, 2 - gasket, 3 - brake disc, 4 - caliper bracket, 5 - anti-squeal shim No. 1, 6 - pad wear indicator, 7 - retaining plate insert, 8 - brak e pad, 9 - anti-squeal shim No. 3, 10 - anti-squeal shim No. 2, 11 - anti-squeal len gth-adjusting rod spring, 12 - bleeder valve cap, 13 - dust boot, vacuum booster 14 - bleeder valve, 15 - caliper, 16, 17 - guide pin, (See section "Master Brake Cylinder"). 18 - dust cover, 19 - seal, 20 - pisto n, 21 - boot, 22 - snap ring. Note: during assembly, apply to the parts indicated by the arrows: Note: during assembly, app ly to the parts indicated by the arrows:

- consistent grease.
- special lubricant for brake mechanisms.

Installation of the vacuum brake booster

1. Installation is carried out in the reverse order of removal (see fig. "Removal of th e brake vacuum booster").
2. Pump the brakes and check for the absence of leaks in the brake system.
3. After installation, check the operation of t he brake vacuum booster.

Front brakes

Removal and installation

Note: Perform removal and installation as sho wn in the figure "Front Brakes".

Inspection

1. Measure the thickness of the brake pad lini ngs.

Nominal value..... .. 10.0 mm

Minimum value ..... 1.0 mm

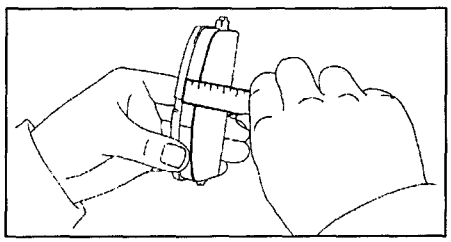

2. Check the shim-type lining. a) Clean the linings and their mounting areas with a s pecial fluid. Make sure that the linings ar e in normal condition.

b) After installing the shim-type linings, make sure they do not fall out.

3. Check the anti-squeal spring. a) Clea n the springs and their mounting area s with a special fluid. Make sure that the springs are in normal condition.

b) Install the springs and ensure that the rot or turns freely and that the pads and spring s do not contact each other. 4. Check the br ake disc thickness. 22 mm

Nominal. .....

Maximum permissible. ..... 21 mm

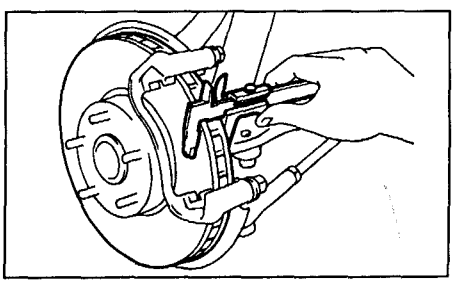

5. Measure the runout of the brake disc a t a distance of 10 mm from the outer e dge. Maximum runout .....0.05 mm

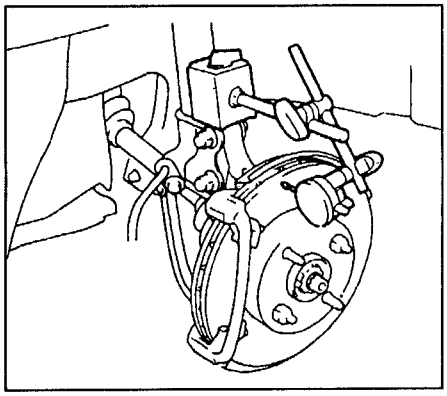

If the brake disc runout is greater than or equal to the maximum value, check the be aring axial clearance and the hub runout.

4. If necessary, adjust the disc runout.

a) Unscrew the two bolts and remove th e caliper bracket.

b) Unscrew the nuts and remove the brake disc.

c) Reinstall the disc, rotating it by 1 /5 of a turn from its original positi on on the hub, measure the disc r unout in all installation positions. Choose the minimum value obtain ed. Compare it with the maximum

permissible.

g) If the resulting value is smaller, install the disc in this position, install the calip er bracket, and tighten the mounting b olts.

Tightening torque.... .....120 N·m

d) If the resulting value is larger, replace the disc and repeat steps "v" and "g".

Rear brakes

Disassembly

Note: remove as shown in the correspondi ng figure "Rear drum brakes" or "Rear disc brakes".

Inspection

1. Check the internal diameter of the brake drum.

Nominal diameter. .....200 mm

Maximum allowable..... 201 mm 2. Check the thickness of the brake shoe linings. No minal diameter.

Maximum allowable.... .....4 мм

.....1 мм

3. Check the contact fit of the brake shoe li ning against the drum. If the contact be tween the working surfaces is poor, replac e the brake shoes.

Assembly

Assemble the parts as shown in th e "Rear Drum Brake Component I nstallation Diagram". Inspection and replacement

rear

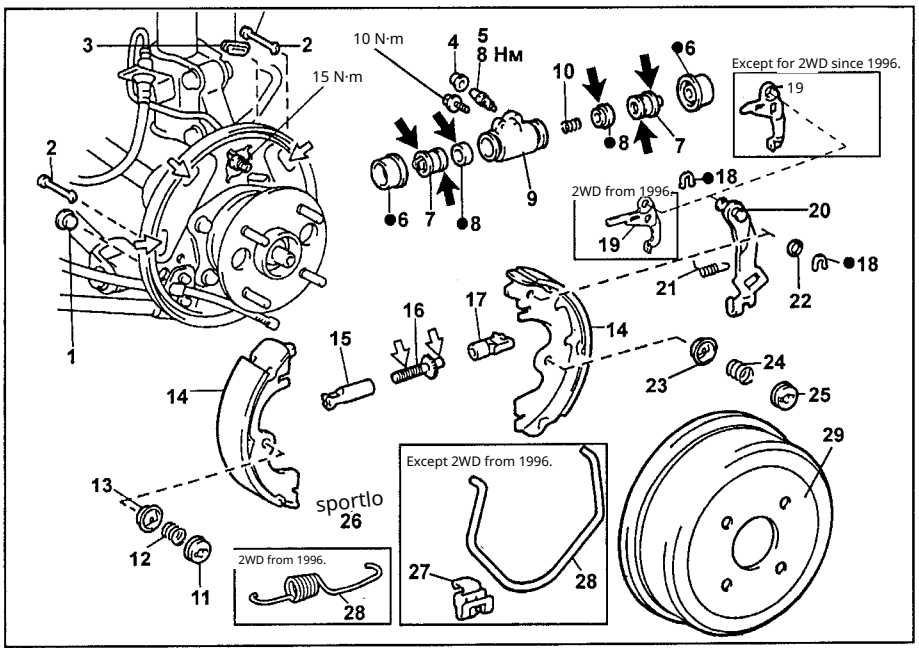

Rear drum brakes. 1 - inspection hole plug, 2 - brake shoe retainer, 3 - servic e hole plug, 4 - bleeder nipple cap, 5 - bleeder nipple, 6 - dust boot, 7 - piston, 8 - seal, 9 - wheel brake cylinder, 10 - spring, 11, 13 - spring seat, 12 - spring, 14 - brake shoe, 15, 17 - automatic adjuster supports, 16 - automatic adjuste r screw, 18 - retaining ring, 19 - automatic adjuster lever, 20 - parking brake l ever, 21 - spring, 22 - washer, 23, 25 - spring seat, 24 - spring, 26 - retaining s pring, 27 - return spring retainer, 28 - return spring, 29 - brake drum.

Note: When assembling the parts indicated by the arrows, apply:

- grease of appropriate consistency,
- special lubricant for brake mechanisms.

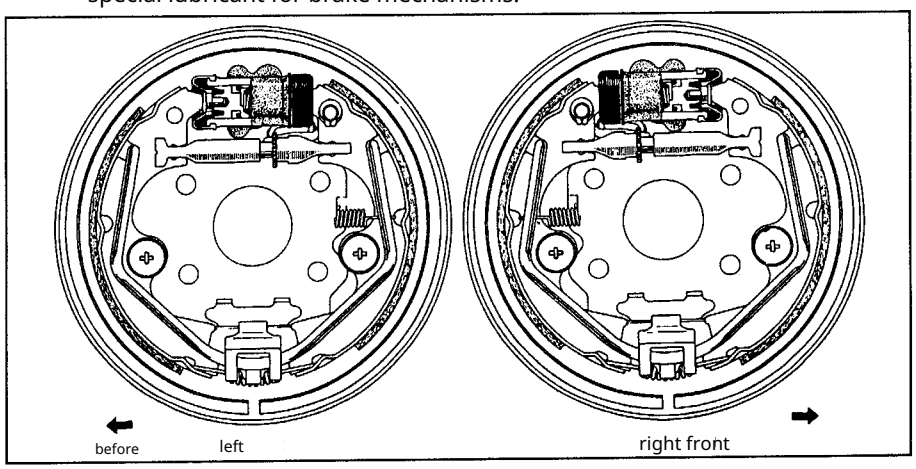

Rear drum brake component installation diagram (models up to 1996).

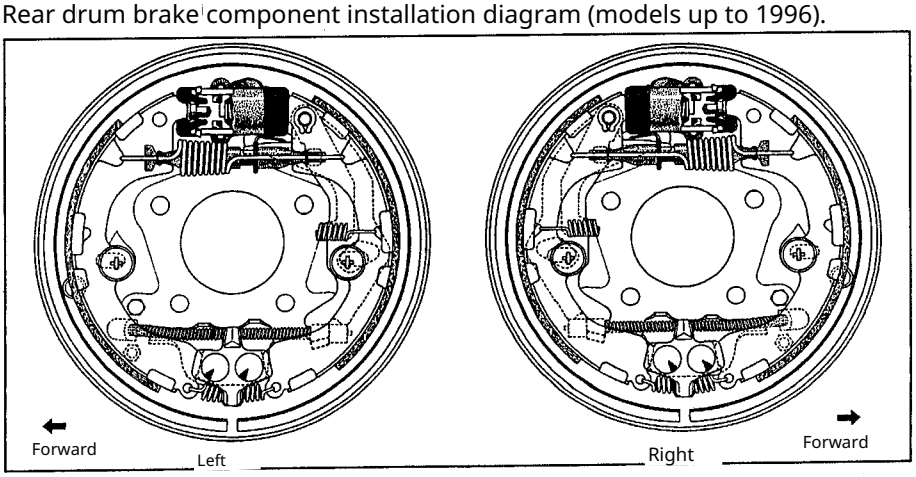

Diagram of the installation of rear drum brake components (models from 1996).

disc brakes (models from 1996)

1. Check the lining thickness.

Nominal value... .....10 mm

Minimum value ....1 mm

2. Check the thickness disc

of the brake

Nominal value..... ..... .9 mm

Minimum value ..... 8.0 mm

If the disc thickness is less than the minimum allowable replace the disc.

3. Measure the brake disc runout at a distance of 10 mm from the outer edge.

Maximum allowable runout. .....0.15 MM

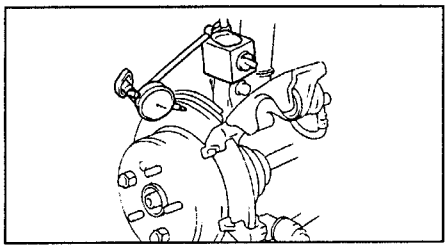

Caliper disassembly

1. Remove the piston.

a) Using a special tool, rotate and remove the piston.

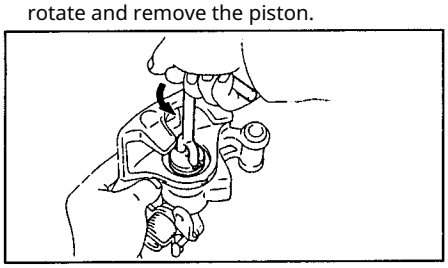

b) Remove the piston seal. 2. Unscrew the adjusting bolt. a) Fit th e special tool as shown in the illustrat ion.

Note: when fitting the special tool, do not bend the spring seat.

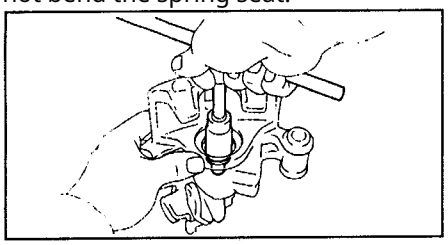

6) Using the special tool, remove the circlip.

c) Remove the bolt and the special tool.

d) Detach the special tool from the bolt.

3. Using a hammer and screwdriver remove the dust cover.

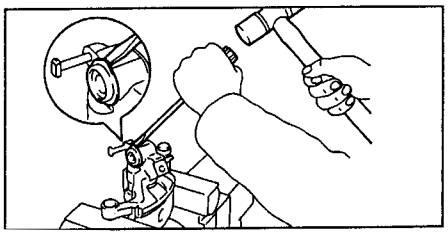

Assembly of the caliper

1. Install the new dust boot.

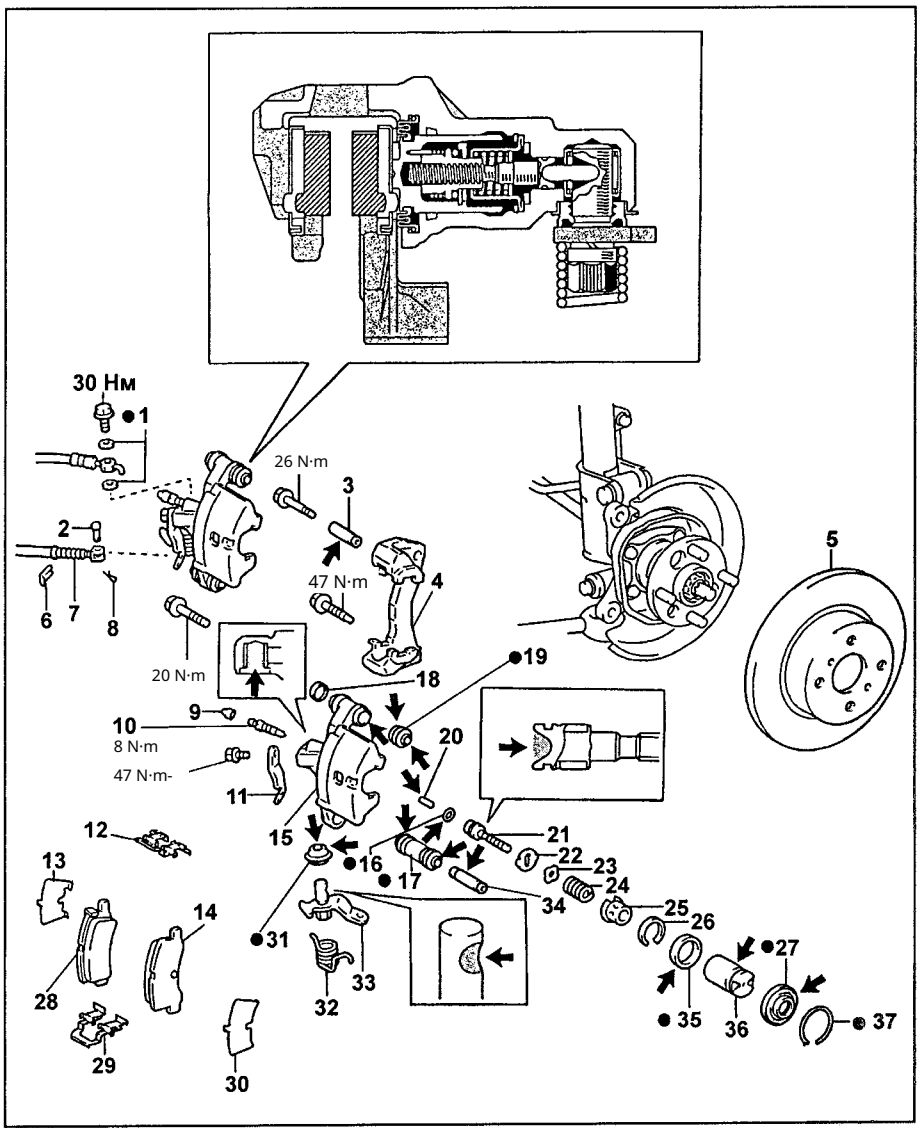

Rear disc brakes (models from 1996). 1 - gasket, 2 - pin, 3 - 3 - pin (pivot), 4 - caliper bracket, 5 - brake disc, 6 - retainer, 7 - parking brake cable, 8 - cotter pin, 9 - bleeder cap, 10 - bleeder screw, 11 - retainer, 12 - shim plate, 13 - anti-squeal shim, 14 - brake pad, 15 - caliper, 16 - O-ring, 17 - dust boot, 18 - seal, 19 - dust cover, 20 - locking pin, 21 - adjusting bolt, 22 - lock washer, 23 - spring seat, 24 - spring, 25 - spring holder, 26 - circlip, 27 - dust cover, 28 - brake pad, 29 - shim plate, 30 - anti-squeal shim, 31 - dust cover, 32 - spring, 33 - parking brake lever, 34 - bushing No.1, 35 - piston seal, 36 - auxiliary piston, 37 - circlip.

Note: when assembling, apply grease of appropriate consistency to the parts indicated by t he arrows.

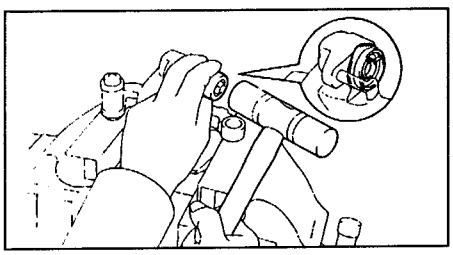

2. Install the parking brake lever and spring.

Note: make sure the bearing does not block the cylinder hole.

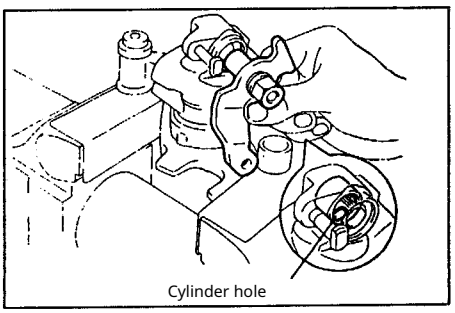

3. Install the retainer. Note: t he retainer must fit snugly against the piston a nd must not touch the parking brake lever.

4. Install the adjusting bolt. a) Install th e following parts onto the bolt:

- locking washer,
- spring seat,
- spring,
- spring retainer,
- locking pin.

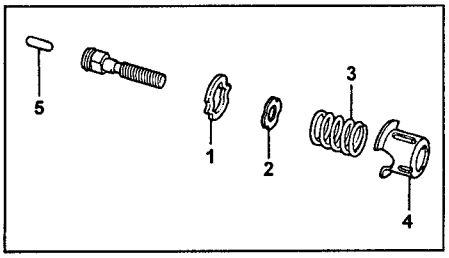

1 - locking washer, 2 - seat springs, 3 - spring, 4 - Hold-spring retainer, 5 - lock pin.

b) Install the special tool on the bolt.

c) While turning the special tool by hand, f ully compress the spring. Note: align the protrusions of the washer and the retainer.

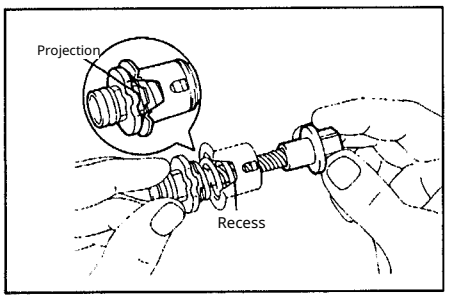

g) Install the adjusting bolt as shown in t he figure.

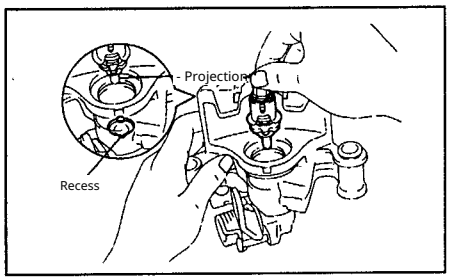

d) Install the snap ring.

e) After installing the parking brake cable stops (models up to 1996). 1 - bracket of the ring, remove the special tool. parking bra ke cable, 2 - parking brake cable drive No.2, CABLE f) While moving the parking brake lever, make sure that the adjustment bolt mov es smoothly. 3 - pad holder, 4 - parking brake cable retainer, 5 - parking brake cable No.3, 6 - brake shoe, 7 - spring, 8 - s pring seat, 9 - spring, 10 - return spring, 11 - brake drum. Note: when assembling, apply grease to the parts indicated by the arr ows.

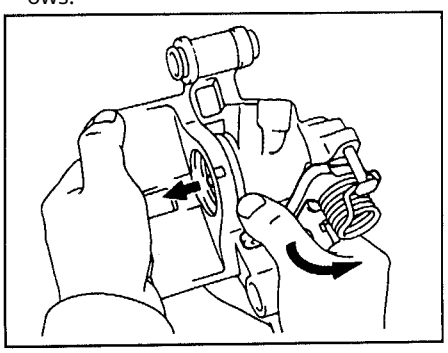

5. Install the piston.

a) Install the seal into the cylinder.

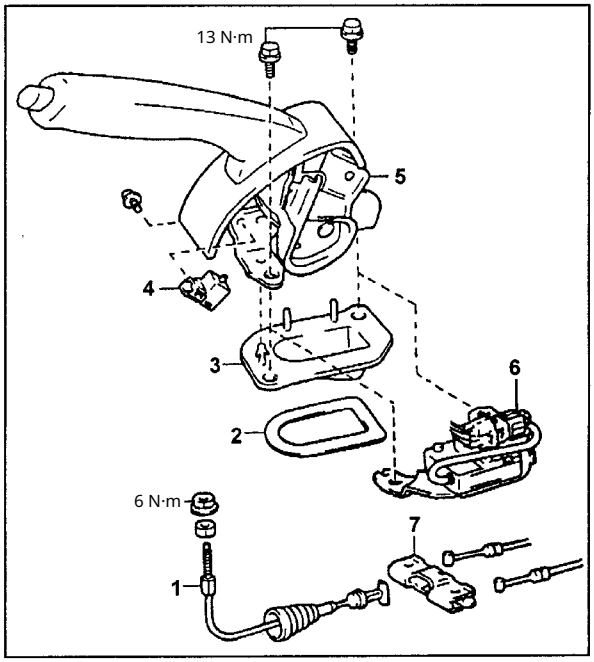

Lever parking brake.
1 - Parking brake cable No. 1
2 - seal,
3 - bracket,
4 - Parking brake switch
5 - parking brake lever
6 - deceleration sensor (4WD),
7 - retainer.

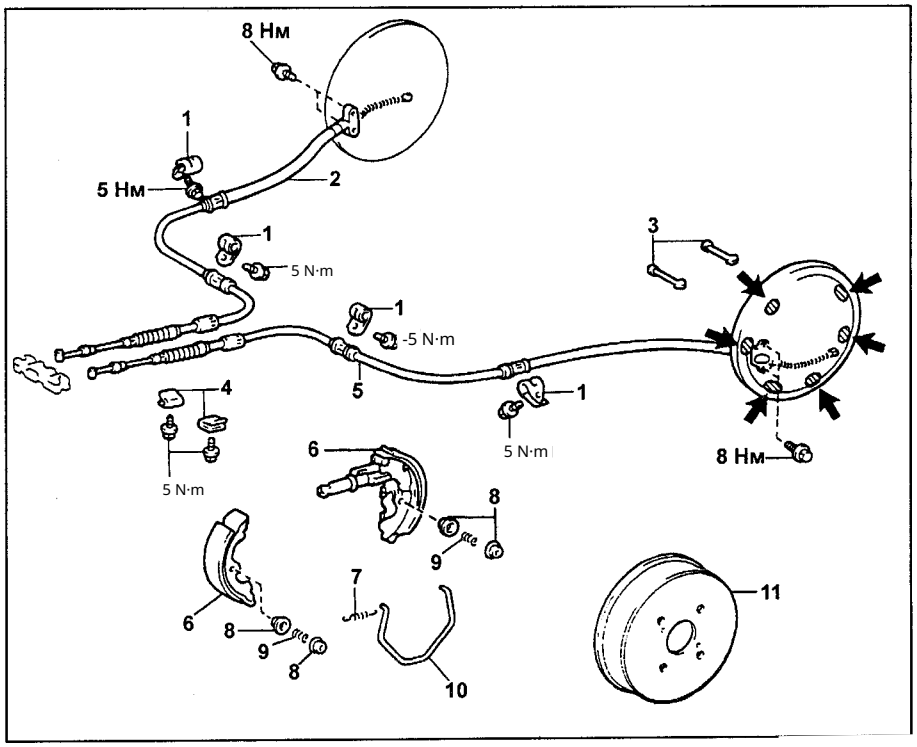

b) Using the special tool, install the piston so that the notch aligns with the projection of the caliper.

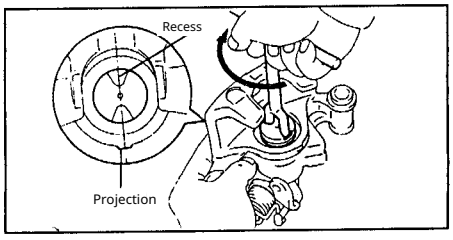

6. Install bushing No.1. N ote: install the bushing so that the notc h matches the projection of the boot.

projection of the boot.

Parking Brake

Removal and Installation

Note: Perform removal and installation as shown in the illustrations "Parking Brake Lever" and "Parking Brake Cables".

"Parking Brake Cables".

Inspection

1. Check the removed parts for absence of wear, rust, or damage.

2. Measure the clearance between the brake pad and the parking brake lever.
brake.

Maximum allowable clearan
ce. .....0.35 mm

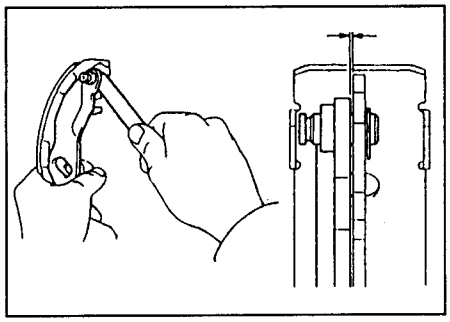

If the clearance does not match the sp ecified value, select an adjustment shi m of the required thickness.

Thickness, mm	Thickness, mm
0,2	0,5
0.3	0.6
0.4	0.7

6. Replace the parking brake lever adju stment shim if necessary.

a) Remove the parking brake lever a nd install an adjustment shim of the required thickness.
b) Install the parking brake lever wit h a new lock washer. c) Re-measure the clearance.

Pressure regulator (P-val ve)

Fluid pressure check 1. Install the press ure gauges as shown in the illustration " Fluid Pressure Check".

2. Remove the air from the pressure gauges. 3. Apply pressure to the master b rake cylinder and measure the pressure in the rear wheel cylinder. If the results obtained do not match the values on the pressure regulator performance gr aphs, replace the pressure regulator.

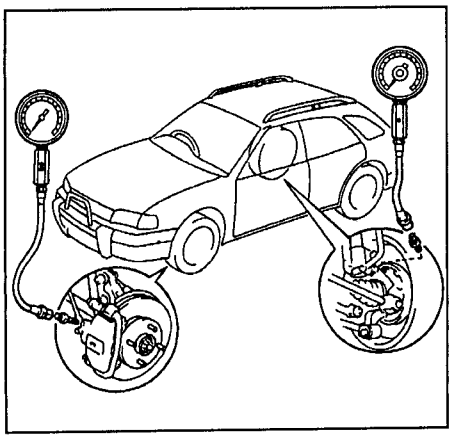

Fluid pressure check.

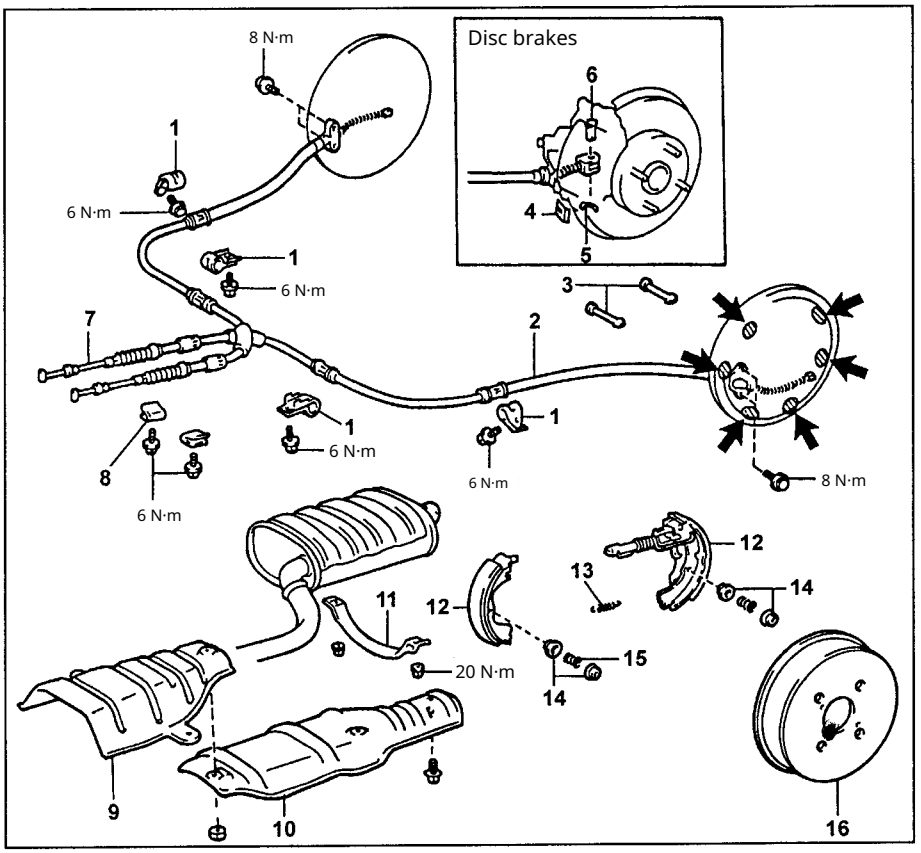

Parking brake drive cables (models from 1996). 1 - parking brake cable bracket, 2 - parking brake drive cable No. 2,
3 - shoe retainer, 4, 5 - retainer, 6 - pin, 7 - parking brake drive cable No. 3, 8 - parking brake cable clip, 9 - protective cover No. 1, 10 - protective cover No. 2, 11 - bracket, 12 - brake shoe, 13 - spring, 14 - spring seat, 15 - spring, 16 - brake drum.
Note: when assembling, apply
a consistent grease to the parts indicated by the arrows.

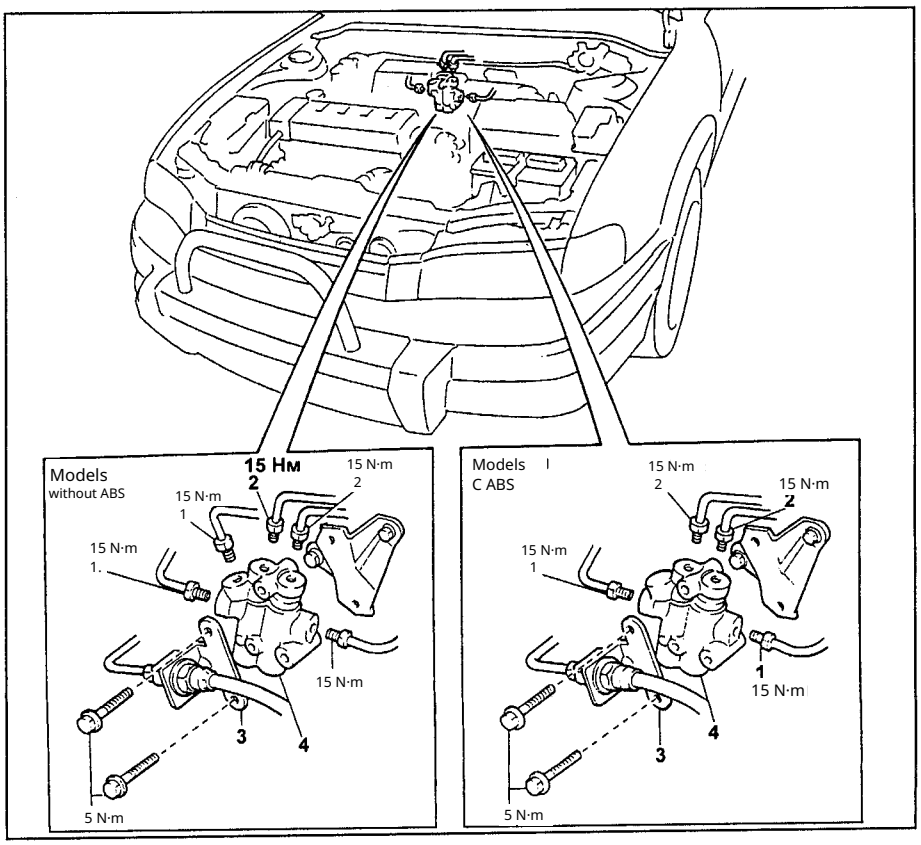

Removing the pressure regulator. 1 - front brake pipe, 2 - rear brake pipe, 3 - bracket (manual transmission), 4 - pressure regulator.

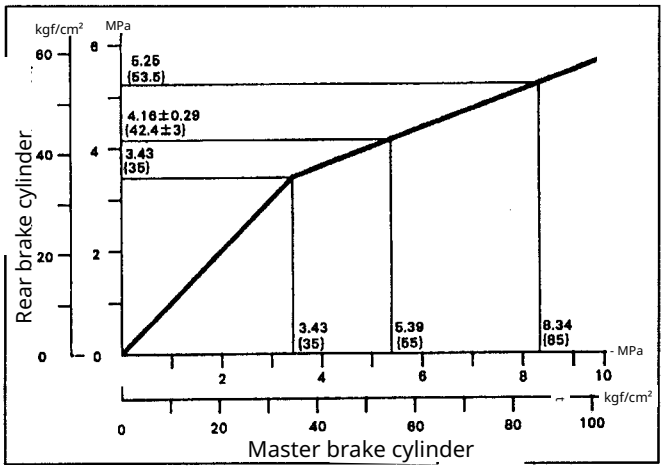

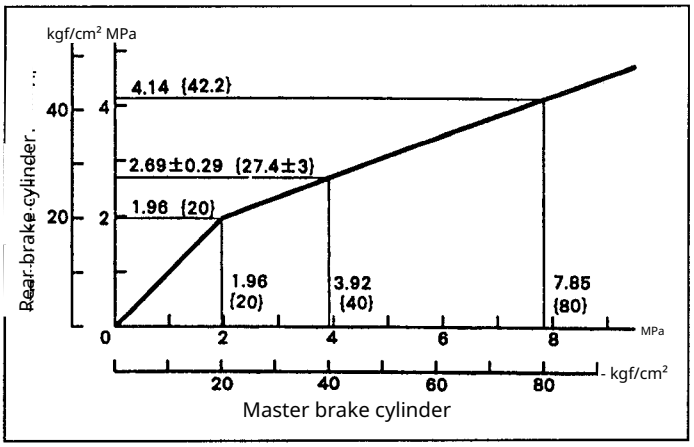

Pressure regulator operating chart (models up to 1996). (2WD models from 1996 (4A-FE)).

Pressure regulator operating chart

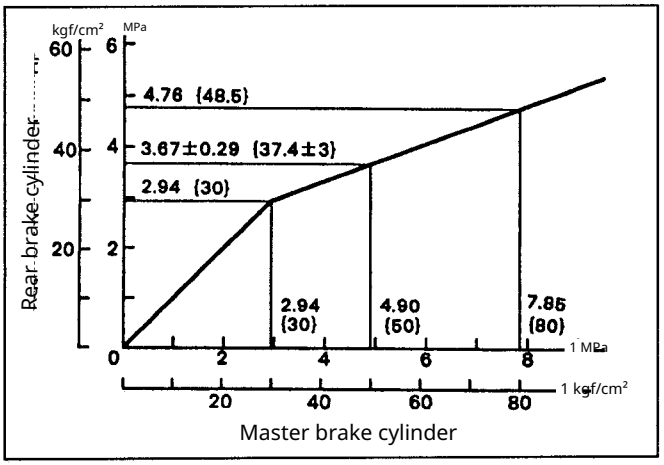

Pressure regulator chart
(models 2WD from 1996 (4A-GE)).

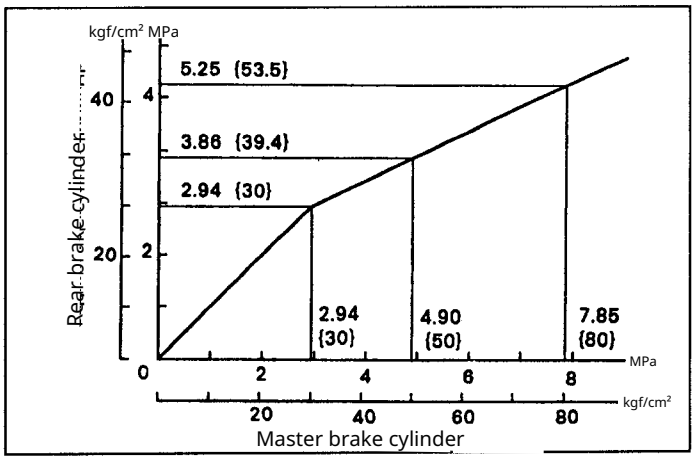

Pressure regulator operation chart (4W
D models from 1996).

Anti-lock Braking System (ABS)

Description

The diagnostic systems The el ectronic control unit has a fail-safe syste m that can detect a malfunction in the sy stem. When a malfunc- tion is detected, t he electronic control unit disables the AB S system, and on the instrument cluster

the ABS warning indicat or lights. In 4WD models a deceleratio n sensor is used, which sends an electr ical signal to the ABS electronic control unit during braking. ABS system inspec tion

1. Make sure the battery voltage (with the ignition off) corresponds to the specified value.
Rated voltage.. ..... 10-14 V

2. Check the ABS indicator.
a) Turn on the ignition.
b) Make sure the indicator lights up for three seconds. If it does not, repair or replace the fuse, indicator lamp,

And

wiring harness.

3. Read the fault code.
a) Turn on the ignition.
b) Short the "Tc" and "E1" terminals of t he diagnostic connector.

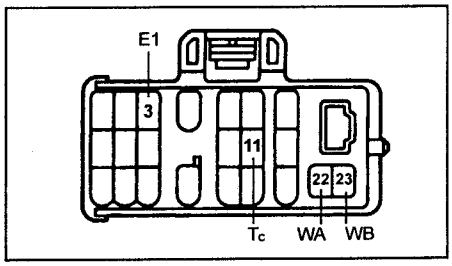

c) Make sure the jumper on the "WA" an d "WB" terminals of the diagnostic conne ctor is removed.
Note: on some models, the ABS system will be diagnosed only when the jumper is inst alled.

g) If a malfunction is present, after 4 seconds the indicator will begin to flash. Count the nu mber of flashes.

Note:

- The fault code consists of two digit s; the first digit is determined by the initial series of flashes, then after a 1 .5-second pause the second series of flashes follows, which corresponds t o the second digit of the code.

- If there are two or more fault code s, the smallest code will be displayed first, and then the remaining codes in ascending order. There will be a 2.5-second pause between codes.

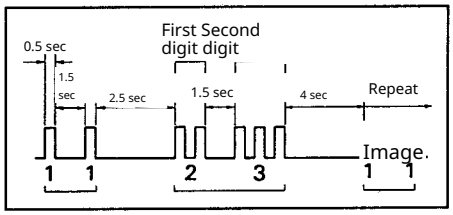

d) If no fault is present, the indicator will flash at 0.5-second intervals.

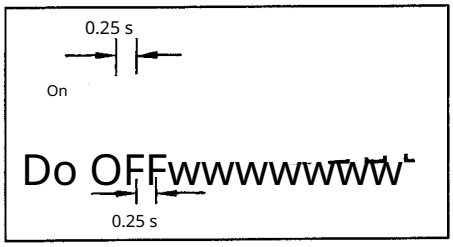

e) After correcting the malfunction, era se the codes stored in the memory of t he electronic control unit. Note: if the battery is disconnected, all fault code s stored in the memory of the electronic control unit will be erased.

g) Disconnect the "Tc" and "E1" terminals of the diagnostic connector.
3) Install a jumper on the "WA" and "WB" terminals.
i) Turn the ignition on and confirm that the ABS indicator lights for three seconds and then goes out.

Clearing Fault Codes

1. Turn the ignition off.
2. Remove the "ECU-IG" fuse (10 A) for 10 seconds or longer depending on the ambient temperature (the lower the temperature, the longer).
3. Make sure that the fault codes are cleared (the ABS indicator goes out).

Table. ABS system fault codes (models up to 1997).

Code	Signal pattern	Malfunction	Inspection conditions	Cause of malfunction
11	I‖	Break in the relay electrical circuit magnetic valve	(1) The solenoid valve relay is energized (voltage at the "SR" terminal is more than 8.3 V (less than 1.5 V)*). (2) No signal confirming that the relay is on (signal at the "AST" terminal (SR)* - 10 - 14 V) (3) More than 0.2 s.	- Internal wiring of the modulator - ABS Solenoid Valve Relay - Relay wiring harness electromagnetic valve
12	‖I	Short circuit in the circuit relay of the solenoid valve	(1) With the ignition ON the electromagnetic valve relay is OFF (2) There is a signal confirming that the relay is ON (signal at terminal "AST" (SR)* - 10 - 14 V) (3) More than 0.2 s.	- Internal wiring of the modulator - ABS electromagnetic valve relay - Relay wiring harness electromagnetic valve
13	‖II	Open circuit in the electric fuel pump relay	(1) With the ignition ON the electric pump relay is ON (voltage at terminal "MR" not more than 1.5 V)* (2) No signal confirming that the pump relay is ON (signal at terminal "MT" - 10 - 14 V) (3) More than 0.2 s.	- Internal wiring of the modulator - Electric pump relay - Relay wiring harness
14	‖III	Short circuit in the circuit Relay electropump	(1) With the ignition switched on The fuel pump relay is switched off (voltage on output "MR" 10 - 14 V)* (2) There is a signal, I confirm— indicating that the relay is energized (signal on the "MT" terminal - 10 - 14 V) (3) More than 0.2 s (2.5 s)*	- Internal wiring of the modulator - Fuel pump relay - Relay wiring harness electropump
21	‖I	Open circuit or short circuit in the front right solenoid valve wheels	(1) With the ignition switched on (2) Short circuit in the winding of the solenoid of the solenoid valve or a short circuit between the terminal of another solenoid valve and "ground" (3) More than 0.1 s (0.02 s)*	- Short circuit in the winding - Wiring and connector electromagnetic modulator valves
22	‖II	Open circuit or short circuit in the solenoid valve of the front left wheel		
23	‖III	Break or short circuit - operation in the electromagnetic valve of the rear right wheels		
24	‖‖‖	Open circuit or short circuit in the solenoid valve of the rear left wheel		
31	I‖I	Fault in the front-right wheel speed sensor	(1) Vehicle speed above 10 km/h (2) No signal from the wheel speed sensor (3) More than 5 s (15 s)*	- Rotation frequency sensor rotation - Wiring and sensor connector- rotation speed sensor - Electronic control unit of the ABS
32	‖II	Fault in the front wheel speed sensor of the front-left wheel	(1) Vehicle speed above 15 km/h (2) Signal break from the wheel speed sensor (3) More than 7 times	
33	‖‖‖	Fault in the rear wheel speed sensor of the rear-right wheel	(1) Vehicle speed above 20 km/h (2) Continuous irregular sensor signal (3) More than 75 times in 5 s.	

Table. ABS system fault codes (models up to 1997). (continued)

Code	Signal pattern	Malfunction	Inspection conditions	Cause of malfunction
34	IIIIIII	Fault in the rear wheel speed sensor of the left wheel	(1) Ignition switch in the "ON" position (2) Open circuit or short-circuiting in the sensor circuit (3) More than 1 s (0.6 s)*	
41	IIIII	Battery voltage too high or too low	(1) Speed over 3 km/h (2) Voltage below 9–10 V or above 16–18 V (3) More than 10 s.	- Battery - Voltage regulator - Electronic control unit of the ABS
43	IIIIIII	Fault in the deceleration sensor circuit (4WD models)	(1) Vehicle stopped → moves at a speed over 30 km/h → vehicle stopped (2) No change in the sensor signal (3) More than 16 times	- Deceleration sensor, wiring harness or sensor connector - ABS electronic control unit
44	⎍⎍⎍⎍_⎍⎍⎍⎍	Open circuit or short cuit in the deceleration sensor circuit (4WD models)	(1) Ignition is on (2) Open circuit or short-circuit in the deceleration sensor circuit (3) More than 1 s.	- Deceleration sensor
(49)*	IIIIIIIIIIII	Open circuit in the switch circuit for stop lamps	(1) Voltage at the "STR" terminal 1.2 - 1.8 V (2) More than 0.3 s	- Wiring harness or stop lamp switch connector
	⎍⎍⎍⎍_51 I	Short circuit or open circuit power supply of the electric pump	(1) Ignition is on (2) The electric pump is not operating	- Electric pump, relay, and battery - Wiring, connector and bolts that connect to the "ground" or the electric pump circuit
-	⎍	ABS control unit malfunction	-	- ABS control unit

( )*: models from 1996

Table. ABS system fault codes (models from 1997)

Code	Signal pattern	Malfunction	Inspection conditions	Cause of malfunction
21	III	Open circuit or short-circuit sensor circuit temperature air intake	(1) Vehicle is moving at a speed of more than 20 km/h (2) Fault in the circuit between the electronic engine control units and the ABS unit and ABS (3) More than 22 s. (1) The vehicle is moving at a speed more than 20 km/h (2) Open circuit or short circuit in the air intake temperature sensor circuit (3) More than 10 s.	- Wiring harness or connector Intake air temperature sensor Intake air • Temperature sensor Intake air • Engine electronic control unit
31	IIII	Malfunction of the rotation frequency sensor	(1) Vehicle speed over 10 km/h (2) No signal from the sensor rotation frequency (3) More than 15 s. (1) Vehicle speed over 15 km/h (2) Signal interruption from the sensor rotation frequency (3) More than 7 times (1) Vehicle speed over 20 km/h (2) Continuous malfunction sensor signal (3) More than 75 times in 5 s. (1) Ignition switch in the "ON" position (2) Break or short circuit in the sensor circuit (3) More than 0.6 s.	- Speed sensor - Wiring and connector - Electronic control unit of the ABS
42	IIIIII	Malfunction of the stop lamp switch	(1) Vehicle speed over 30 km/h (2) Delay of more than 10 minutes of the stop-light switch	- Wiring harness or connector
49	⎍⎍⎍_⎍⎍⎍⎍⎍⎍	Open circuit or short-circuit in the stop lamp switch circuit	(1) Voltage at the ABS electronic control unit terminal more than 1.2 - 1.8 V (2) More than 0.3 s.	- Wiring harness or connector of the stop-light switch

Diagnosis of speed and de celeration sensors

Warning: when diagnosing speed sensors the brake system operates as usual (ABS is not operational).

1. Make sure that the battery voltage (wi th the ignition off) corresponds to the no minal value.

Rated voltage..... 10 - 14 V

2. Check the ABS indicator.
   a) Turn on the ignition.
   b) Make sure the indicator lights up fo r three seconds. If it does not, repair o r replace (if necessary) the fuse, the in dicator lamp, and the wiring harness. Read the fault codes.
3. Read the fault codes.
   a) Turn the ignition off.
   b) Short the T - E1 terminals of the diag nostic connector.

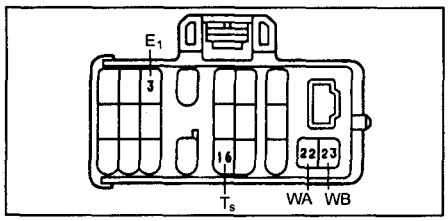

   c) Turn the ignition on.
   d) If the ABS system is normal, th e indicator will flash accordingly. to the code of normal condition "1", indicated in the figure.

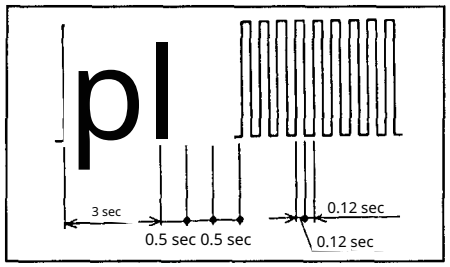

At a speed of 20 km/h, lightly press the bra ke pedal and make sure that before the ve hicle stops the ABS warning lamp will flash, then remain continuously on, and then fla sh again.

4. (Speed Sensors) Check while the vehicle is moving. Accelerate the vehicl e for several seconds to a speed above 8 0 km/h. Make sure that the indicator flas hes according to the diagram in the figur e.

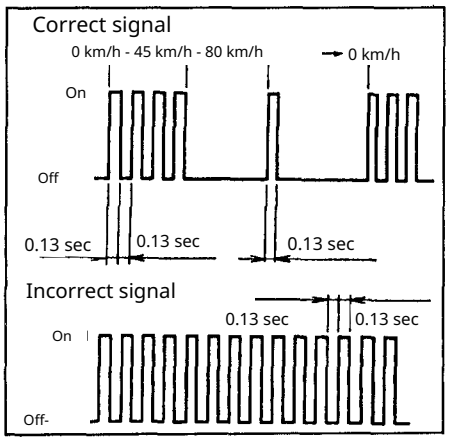

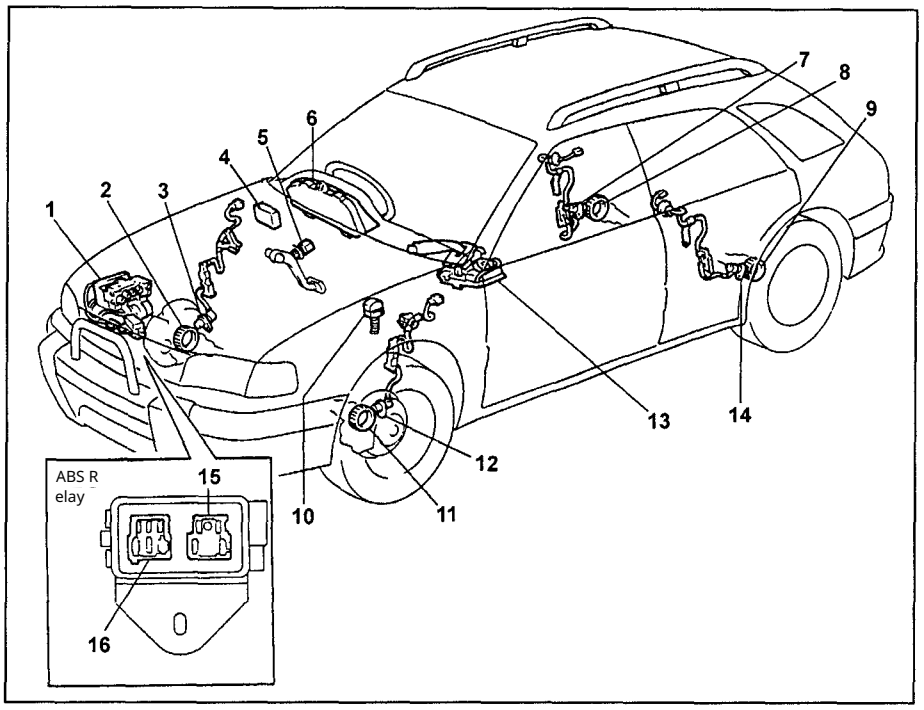

Anti-lock Braking System (ABS) (models up to 1997). 1 - pressure modulator, 2 - fro nt right wheel speed sensor rotor, 3 - front right wheel speed sensor, 4 - ABS elect ronic control unit, 5 - brake light switch, 6 - ABS indicator, 7 - rear right wheel spee d sensor, 8 - rear right wheel speed sensor rotor, 9 - rear left wheel speed sensor r otor, 10 - diagnostic connector, 11 - front left wheel speed sensor rotor, 12 - front l eft wheel speed sensor, 13 - deceleration sensor, 14 - rear left wheel speed sensor, 15 - ABS motor relay, 16 - ABS solenoid valve relay.

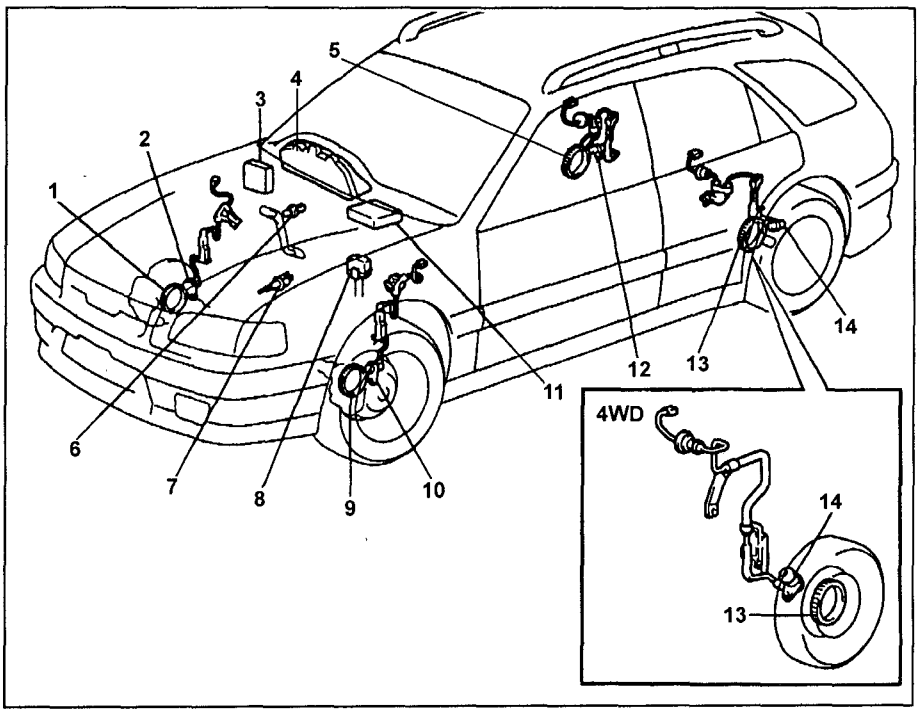

Anti-lock Braking System (ABS) (models from 1997). 1 - Front right wheel rotation sens or rotor, 2 - Front right wheel rotation sensor, 3 - ABS electronic control unit, 4 - Instru ment cluster, 5 - Rear right wheel rotation sensor, 6 - Stop light switch, 7 - Intake air te mperature sensor, 8 - Diagnostic connector, 9 - Rotation sensor rotor, 10 - Front left w heel rotation sensor, 11 - Engine control unit, 12 - Rear right wheel rotation sensor, 13 - Rotation sensor rotor, 14 - Rear left wheel rotation sensor.

5. Reading fault codes. a) Stop th e vehicle. The ABS indicator will flash .

b) Short the "Ts" and "E1" terminals of t he diagnostic connector. No te: do not remove the jumper between t he "Ts" and "E1" terminals.

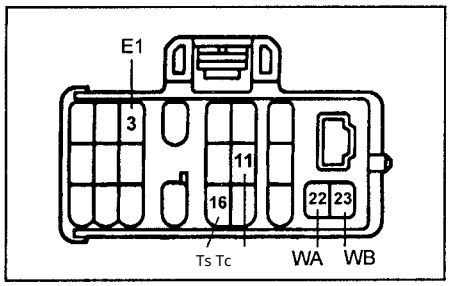

c) Determine the fault code by the number of flashes of the ABS indicator (see the table "Fault codes for wheel speed sensors and the deceleration sensor").

Note:

- During normal operation the indicator flashes at a rate of 2 times per
- second. If there are two or more fault codes, the lowest one will be displayed first.

6. Sensor (deceleration) Check the actuation height of the deceleration sensor.

a) Raise the rear of the vehicle.

Warning: measure the height as shown in the illustration.

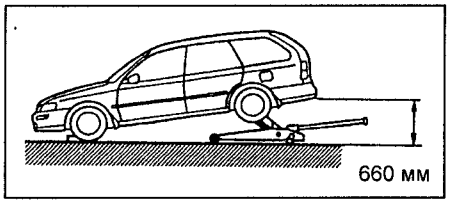

b) Make sure the indicator is flashing. If th e indicator is lit continuously, then Check t he voltage between the \"IG\" terminal of the deceleration sensor connector and \"g round.\" Rated v oltage .....10–14 V

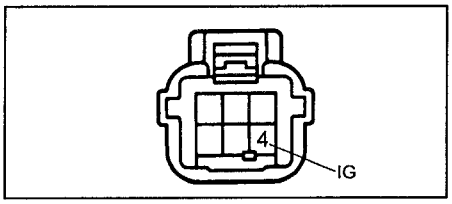

If the voltage is normal, replace the deceleration sensor.

c) Lower the vehicle.

d) Raise the front of the vehicle. Then re peat steps "b" and "c".

Warning: measure the height as shown in the illustration.

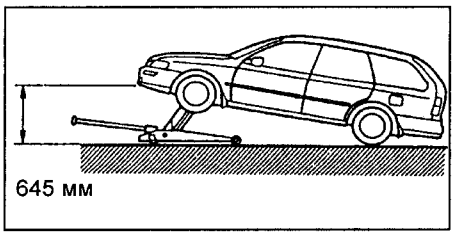

7. (Deceleration Sensor) Check while driving.

a) Make sure the ABS indicator is flashing. If the indicator is lit constantly, check the voltage between the \"IG\" terminal of the deceleration sensor connector and \"ground.\"

Rated voltage .....10–14 V

If the voltage is normal, replace the deceleration sensor.

b) At speeds above 20 km/h, lightly press the brake pedal.

Table. Fault codes for the wheel speed sensors and the deceleration sensor.

Code	Signal pattern	Inspection conditions	Malfunction	Cause of malfunction
-			All rotation speed sensors and their rotors work they melt normally	
71	|LLLLLLL	The vehicle moves straight forward, at a speed of 3–5 km/h	Low signal level from - Front r ight wheel speed sensor Front r ight wheel speed sensor Installation of the sensor	-
72	LLLLLL -		Low signal level from - Front left wheel speed sensor Front left wh eel speed sensor. - Sensor installation Low signal level from - Rear right wheel speed sensor Rear right wheel speed s	
73	| LLLLLLLLLL -		ensor. Sensor installation Low signal level from - Rear left wheel s peed sensor Rear left wheel speed sensor. Sensor installatio n Incorrect signal change - Front right wheel speed sens	
74	|LLLLLLLLLL -		or rotor Front right wheel speed sensor Incorrect signal change - Front left wheel speed sensor rotor Front left wheel speed sensor	-
75		The vehicle is moving at a speed of 45 km/h, for more than 1 second		вращения переднего пра- вого колеса
76				вращения переднего лево- of the wheel
77			Incorrect change in the signal fr om the rear right wheel speed s ensor	- Rotor of the rear right wheel speed sensor
78			Incorrect change in the signal fr om the rear left wheel speed se nsor	- Rotor of the rear left wheel s peed sensor
79		Support speed 20 km/h, gradually increasing the p ressure applied to the bra ke pedal	Deceleration sensor malfun ction	- Sensor malfunction or its in correct installation

c) Check for absence of changes in the indicator flashing, as shown in the figure.

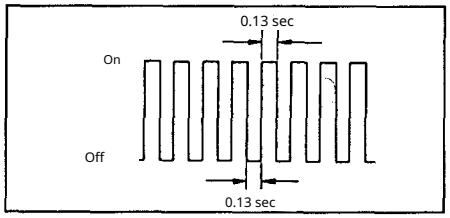

g) At speeds above 20 km/h, press the brake pedal harder.

d) Make sure that when you press the pedal the indicator flashes as shown in the illustration.

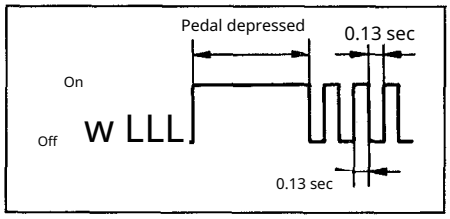

e) At speeds above 20 km/h, press the brake pedal all the way down.

f) Make sure the indicator flashes when the brake pedal is depressed, as shown in the illustration.

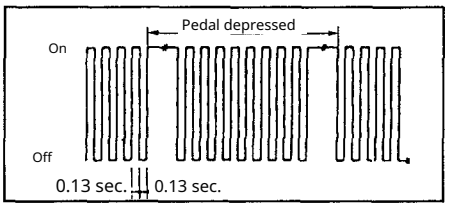

If the indicator's flashing does not match the description, check that the retardation sensor is installed correctly. If the retardation sensor was installed correctly, replace it. 8. Replace or repair the faulty components of the system. 9. Disconnect the "Tc", "Ts" and "E1" terminals of the diagnostic connector.

Pressure modulator

Note: Remove and install as shown in the illustration "Removal of the pressure modulator".

Inspection

pressure modulator

1. Check continuity and resistance between the modulator connector terminals as shown in the table. Models up to 1996.

Connector pins (A and B)	Resistance, Ω
A1 - B4	about 5
A2 - B4	
A3 - B4	
A4 - B4	
A5 - B4	about 2.2
A6 - B4	
A7 - B4	
A8 - B4	
B2 - B5	about 33
B3 - B4	about 33
B1 - B2	-

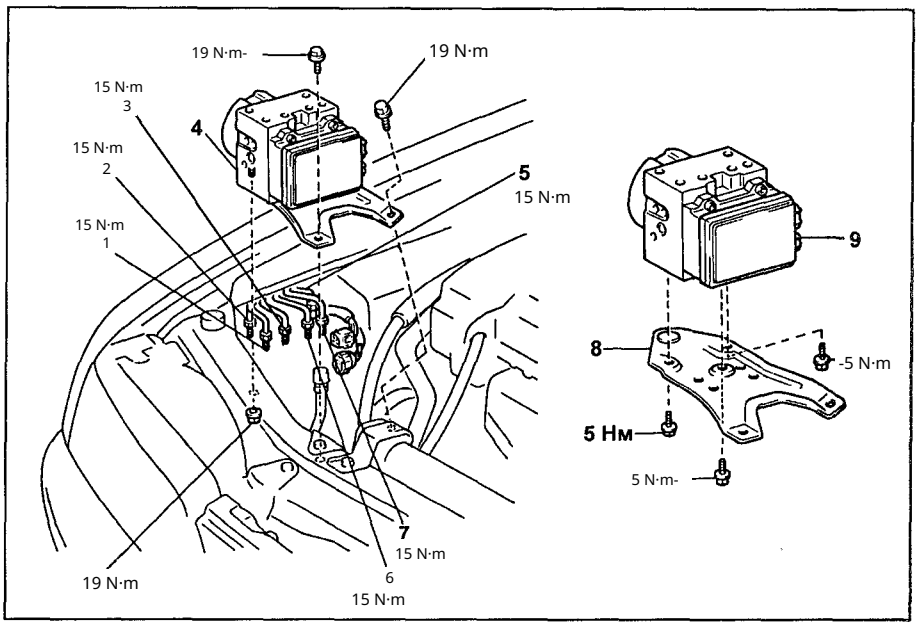

Removal of the pressure modulator (models from 1996). 1 - tube No. 8, 2 - tube No. 3, 3 - tube No. 13, 4 - pressure modulator assembly with bracket, 5 - tube No. 1, 6 - tube No. 6, 7 - tube No. 7, 8 - bracket, 9 - pressure modulator.

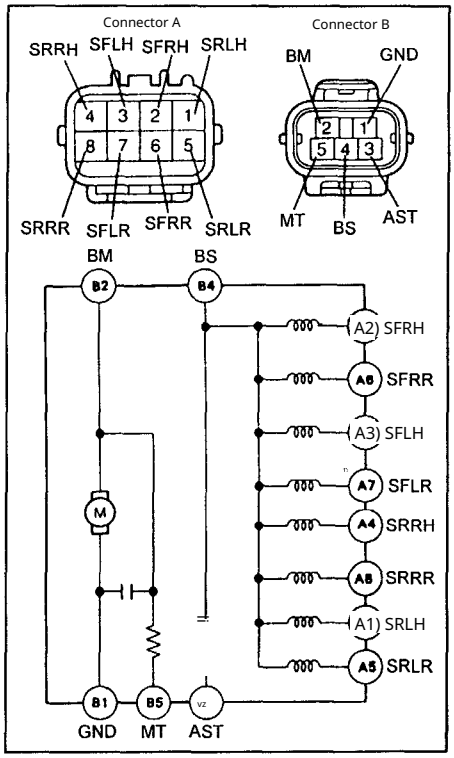

Models up to 1996

Models from 1996

Connector pins (A and B)	Resistance, Ω
A1 - B2	about 6.4
A3 - B2	
A4 - B2	
A5 - B2	
A2 - B2	about 2.2
A6 - B2	
B2 - B4	about 1500
B1 - B4	
B2 - B5	-

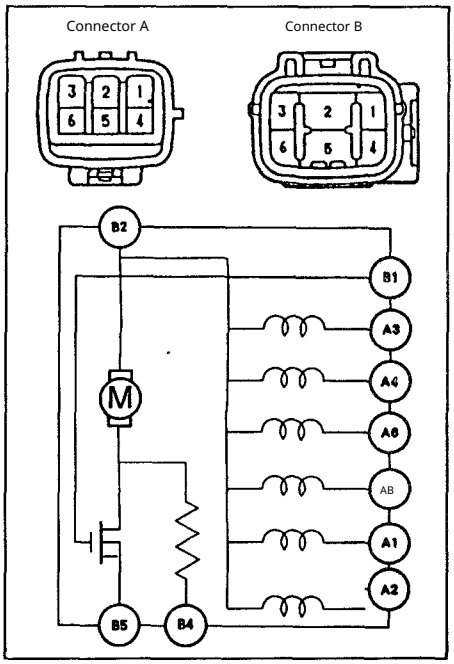

Models from 1996.

Switch inspection

stop lights

1. Check continuity between pins "1" and "2" of the switch connector of the stoplight switch.

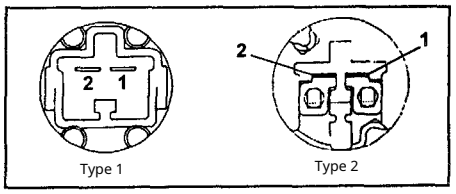

When the pedal is depressed there should be continuity when the pedal is released there should be no continuity. If not, replace the stoplight switch.

Control relay

Inspection

1. Check the operation of the electrical relay— of the pump.

a) Ensure there is conductivity between t erminals "3" and "4" and no conductivity between terminals "1" and "2"

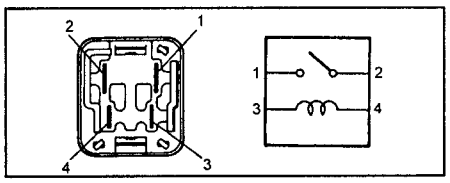

b) Apply battery voltage to terminals "3" and "4". Make sure there is conti nuity between terminals "1" and "2".

2. Check the operation of the electromagnetic relay— solenoid valve.

a) Make sure there is continuity between termina ls "2" and "3", and between "4" and "6".

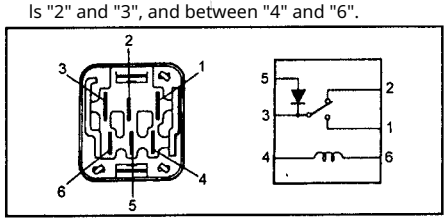

b) Check for continuity between terminal "5" (positive lead of the ohmmeter) and (negative lead of the ohmmeter) a nd the absence of continuity when the o hmmeter leads are reversed. c) Apply th e battery voltage to terminals "4" and "6". d) Verify continuity between termin als "1" and "3" and the absence of conti nuity between terminals "2" and "3".

Front wheel rotation sp eed sensors

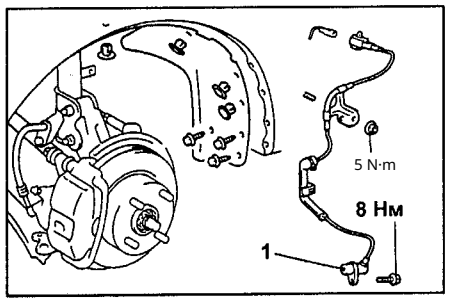

Removing the front wheel speed sensors 1 Front left wheel speed sensor. Removal and installation

Note: Install in the reverse order of removal.

1. Disconnect the speed sensor connector— rotation sensor.

a) Remove the inner fender liner.

6) Disconnect the connector.

2. Remove the speed sensor.

a) Unscrew the bolts securing the sensor wi ring harness. Tighte ning torque upon ins tallation. ..... 5 N·m

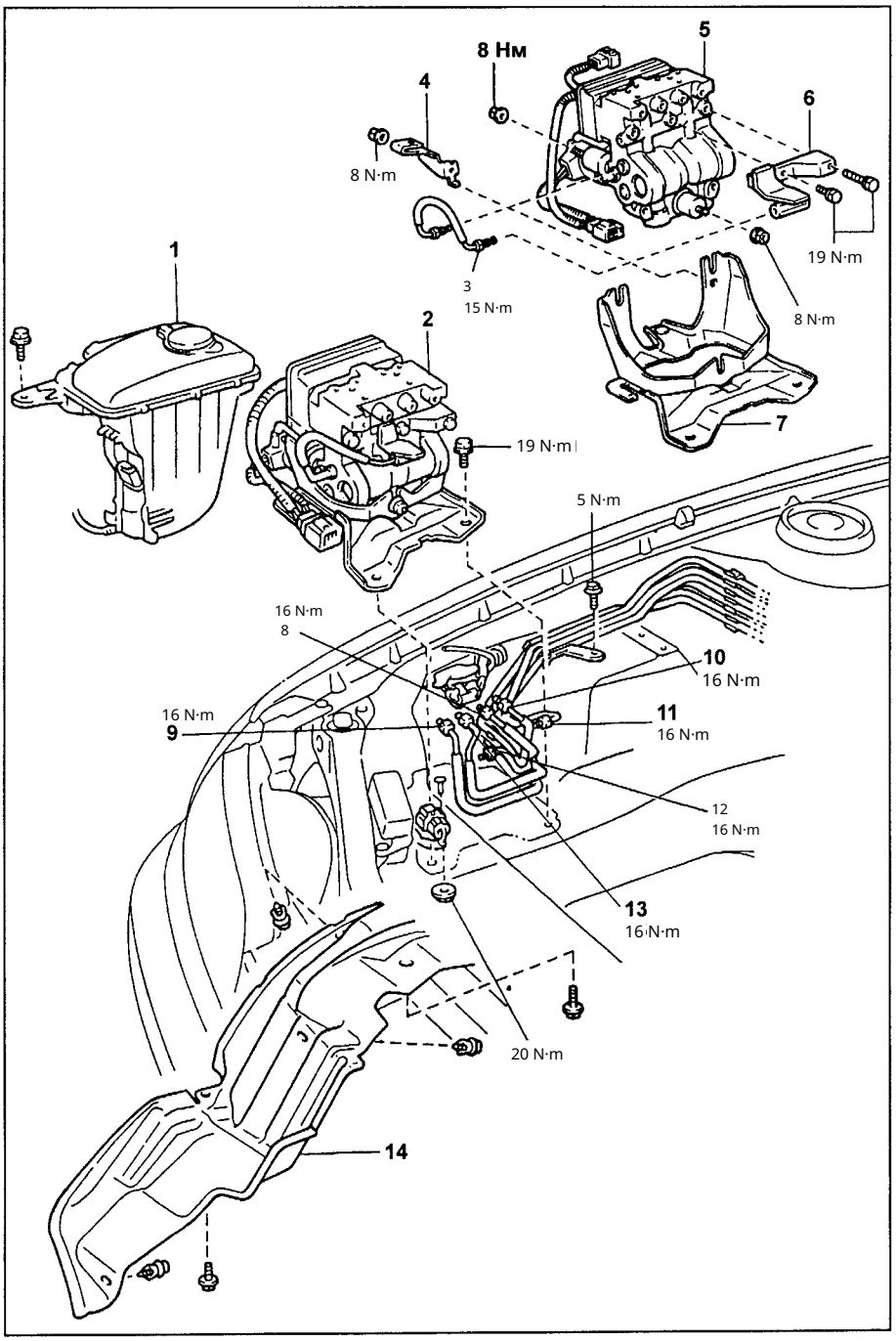

Removal of the pressure modulator (models up to 1996). 1 - washer fluid reservo 2 - ir, pressure modulator assembly with bracket, 3 - modulator tube No. 1, 4 - b racket No. 4, 5 - pressure modulator, 6 - bracket No. 1, 7 - pressure modulator b racket, 8 - tube No. 6, 9 - tube No. 8, 10 - tube No. 7, 11 - tube No. 1, 12 - tube No . 3, 13 - tube No. 13, 14 - wheelhouse liner.

b) Remove the rotation speed sensor from th e steering knuckle. Tightening t orque for installation ..... 5 N·m

Inspection

1. Inspect the front wheel speed sensors.

a) Remove the inner fender liner.

b) Disconnect the speed sensor connecto r.

c) Measure the resistance between the termin als of each sensor connector. Specification

resistance. ..... 1.4 - 1.8 com

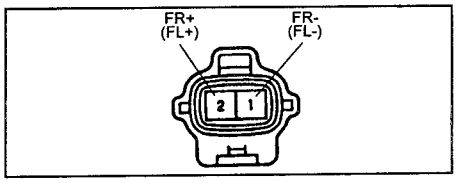

If the value does not match the nominal, replac e the sensor. c) Check for lack of continui ty between each terminal and the sensor hou sing. If there is conductivity, replace the sens or. d) Rec onnect the wheel speed sensor c onnectors.

e) Install the inner fender liner.

2. Check the correct installation of the wheel speed sensor and verify that the tightening torque of the sensor mounting bolt corresponds to the allowable value. Tightening torque: 8 N·m

.....

3. Visually inspect the teeth of the wheel speed sensor rotor. a) Remove the drive shaft.
б) Check the rotor teeth of the sensor for scratches, cracks, deformation, or missing teeth. c) Install the drive shaft. Attention: To prevent damage to the sensor rotor teeth, do not strike the drive shaft.

Sensors

rear wheel rotation speed

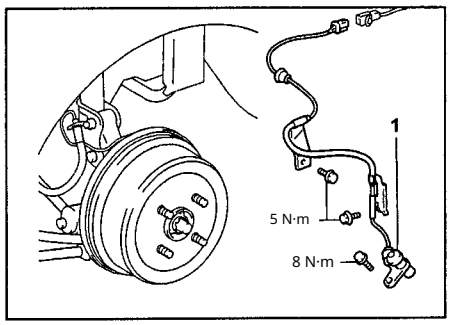

Removal of rotational speed sensors rear wheels. 1 Rear left - t wheel rotational speed sensor.

Removal

1. Remove the seat cushion and backrest if necessary.
2. Disconnect the sensor connector.
3. Remove the sensor.
a) Unscrew the bolts securing the wiring harness.
Tightening torque... ..... 5 N·m
b) Unscrew the bolt securing the sensor.
Tightening torque.. .....8 N·m

Inspection

1. Check the rear wheel speed sensor.

a) Remove the seat cushion and backrest if necessary.
b) Disconnect the speed sensor connector.
c) Measure the resistance between the terminals.
Rated resistance ..... 0.9 - 1.3 mm

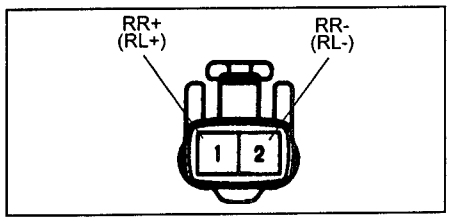

If the value does not match the nominal, replace the sensor.
g) Check for absence of continuity between each terminal and the sensor housing. If continuity exists, replace the sensor.
d) Reconnect the sensor connector.
e) Reinstall the seatback and seat cushion.

Table. Resistance between the connector pins of the ABS control unit (models up to 1996).

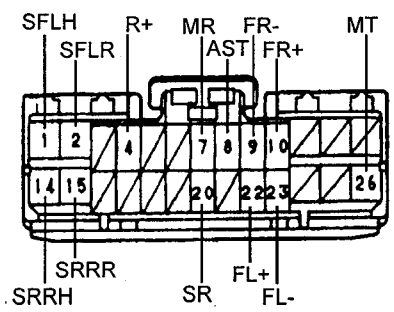

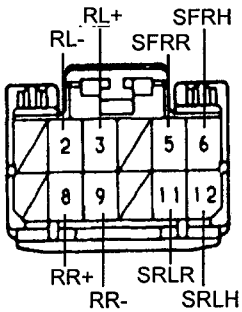

Conclusions	Resistance, Ω
RL+ - RL-	900 - 1300
RR+ - RR-	900 - 1300
FR+ - FR-	1400 - 1800
FL+ - FL-	1400 - 1800
SFLR - "ground"	about 2.2
SFRR - "ground"	about 2.2
SRLR - "ground"	about 2.2
SRRR - "ground"	about 2.2
SFLH - "ground"	about 5
SRRH - "ground"	about 5
SRLH - "ground"	about 5
SFRH - "zemlya" (ground)	about 5
SR - R+	60 - 100
MR - R+	50 - 80
AST - "zemlya" (ground)	about 33
MT - "zemlya" (ground)	circuit closed

Table. Resistance between terminals of the ABS control unit connector (models from 1996 to 1997).

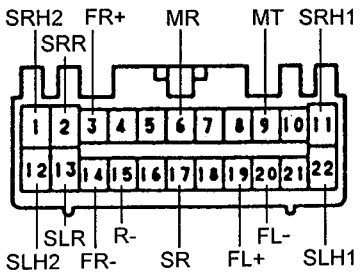

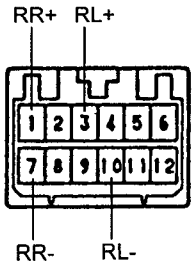

Outputs	Resistance, Ω
FL+ - FL-	1400 - 1800*1
FR+ - FR-	1400 - 1800*1
RL+ - RL-	1050 - 1450*1 (2WD) 900 - 1300*1 (4WD)
RR+ - RR-	1050 - 1450*1 (2WD) 900 - 1300*1 (4WD)
SRR - "zemlya"	about 2.2
SLR - "ground"	about 2.2
SRH1 - "ground"	about 6.4
SRH2 - "ground"	about 6.4
SLH1 - "ground"	about 6.4
SLH2 - "ground"	about 6.4
SR - R-	about 80
MR - "ground"	about 1000
MT - "zemlya" (ground)	about 1000

*1 : at a temperature of 20°C.

2. Check that the sensor is installed correctly and that the tightening torque of the sensor mounting bolt corresponds to the allowable value. Tightening torque - 8 N·m.3. Visually inspect the rotor teeth of the speed sensor. a) Remove the hub assembly. b) Inspect the sensor rotor teeth for scratches, cracks, deformation, or missing teeth. c) Install the hub assembly.

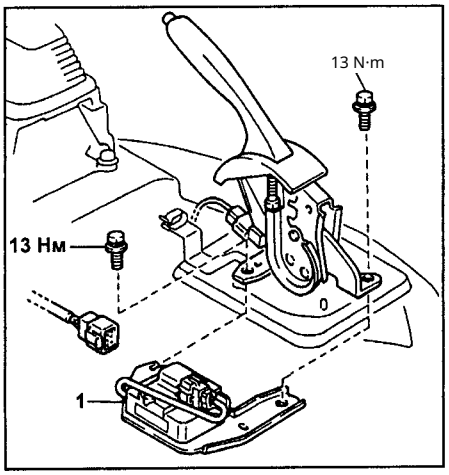

Removal of the deceleration sensor.
1 - deceleration sensor.

ABS circuit check

1. Check the battery voltage with the ignition switched off.

Ignition.

Rated voltage. ..... 10-14 V

2. With the ignition off, disconnect the ABS control unit connector and check the resistance and continuity between the pins of the ABS control unit connector (see the table "Resistance between pins of the ABS electronic control unit connector").

3. Measure the voltage at the pins of the ABS control unit connector with the ignition on (see the table "Voltage at the pins of the ABS control unit connector"). Note: before measuring, check the battery voltage (10–14 V with the ignition on) and the resistance between the connector "ground" pin and the body (with the ignition off — not more than 5 ohms).

Signal form between the pins FL+ - GND, FR+ - GND, RL+ - GND, RR+ - GND (for models from 1996 to 1997 — also between pins FL- - GND, FR- - GND, RL- - GND, RR- - GND). Division value (grid) 1 V and 2 ms.

At a vehicle speed of 30 km/h. Note: increasing the vehicle speed decreases the pulse width.

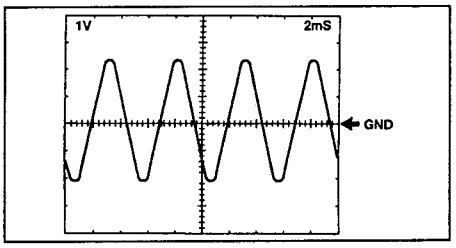

(Models from 1997)

Signal waveform between terminals EXI - GND. Division value (grid) 5 V and 0.1 s.

After the engine warms up, at an intake air temperature of -22°C 106°C.

Note: pulse period 400 ms.

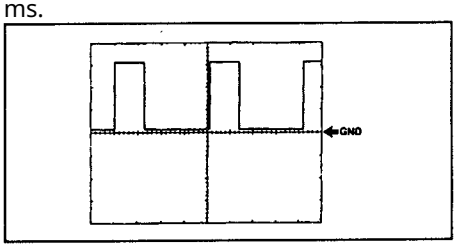

Table. Voltage at the terminals of the ABS control unit connector (models up to 1996).

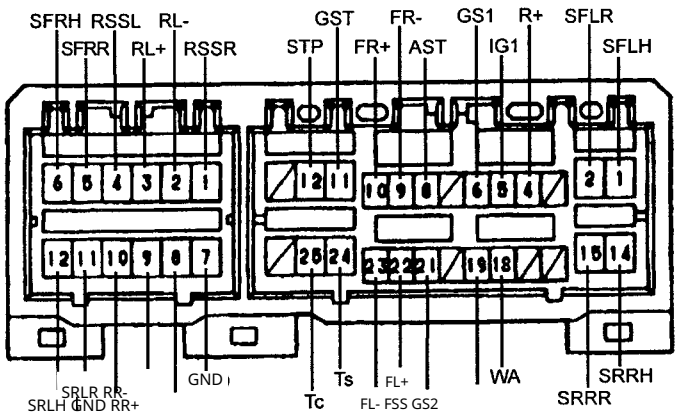

Output	Measurement condition	Voltage, V
SFLH - GND	Ignition switch in the "ON" position, the value will change after 1.5 sec	10 - 14*1
SFLR - GND	Ignition switch in the "ON" position, the value will change after 1.5 sec	10 - 14*1
R+ - GND	Ignition switch in the "ON" position	10 - 14
IG1 - GND	Ignition switch in the "ON" position	10 - 14
GS1 - GND	Ignition switch in the "ON" position, vehicle parked on a level surface	1 - 3
AST - GND	Ignition switch in the "ON" position, the value will change after 1.5 seconds	10 - 14*1
FR- - GND	Ignition switch in the "OFF" position	circuit closed
FR+ - GND	The vehicle is moving at a speed of 30 km/h	pulses
GST - GND	The ignition switch is in the "ON" position, the value will change in 1.5 sec	4-6-no more than 1
STP - GND	Brake pedal pressed, ignition switch in the "ON" position	8 - 14
	Brake pedal released, ignition switch in the "ON" position	no more than 1.5
SRRH - GND	The ignition switch is in the "ON" position, the value will change in 1.5 sec	10-141
SRRR - GND	The ignition switch is in the "ON" position, the value will change in 1.5 sec	10-14"*1
WA - GND	Ignition switch from "OFF" to "ON"	2 V (no more than 3 sec) → 10-14 V*1

Table. Voltages at the pins of the ABS control unit connector (models up to 1996). (continued)

Conclusion	Measurement condition	Voltage, V
GS2 - GND	Ignition switch in the "ON" position, vehicle is on a level surface	1-3
FSS - GND	Ignition switch in the "OFF" position	circuit closed
FL+ - GND	The vehicle is moving at a speed of 30 km/h	pulses
FL- - GND	Ignition switch in the "OFF" position	circuit closed
Ts - GND	Ignition switch in the "ON" position, pins Ts - E1 shorted	no more than 1
	Ignition switch in the "ON" position, pins Ts - E1 not connected	10 - 14
Tc - GND	Ignition switch in the "ON" position, terminals "Ts" - "E1" of the diagnostic connector are shorted	no more than 1
	Ignition switch in the "ON" position, terminals "Tc" - "E1" of the diagnostic connector are not connected	10 - 14
RSSR - GND	Ignition switch in the "OFF" position	circuit closed
RL- - GND	Ignition switch in the "OFF" position	circuit closed
RL+ - GND	The vehicle is moving at a speed of 30 km/h	pulses
RSSL - GND	Ignition switch in the "OFF" position	circuit closed
SFRR - GND	Ignition switch in the "ON" position, the value will change after 1.5 s	10 - 14*1
SFRH - GND	Ignition switch in the "ON" position, the value will change after 1.5 s	10 - 14*1
GND - "ground"	Ignition switch in the "OFF" position	circuit closed
RR+ - GND	The vehicle is moving at a speed of 30 km/h	pulses
RR- - GND	Ignition switch in the "OFF" position	circuit closed
SRLR - GND	Ignition switch in the "ON" position, the value will change after 1.5 seconds	10-14"1
SRLH - GND	Ignition switch in the "ON" position, the value will change after 1.5 secon	10 - 14*1

ds *1: (for the ABS electronic control unit emergency (FAIL SAFE) mode). If the ABS indicator is lit, the check cannot be perfor med. At the "WA" terminal, for the check to be performed the voltage must be less than 2 V; at all other terminals — because the pressure modulator operation is inhibited, the voltage is 0.

Table. Voltage at the terminals of the ABS control unit connector (models from 1996).

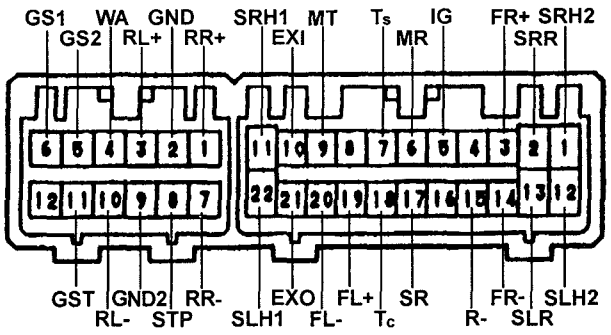

Output	Measurement condition	Voltage, V
SRH2 - GND	Ignition switch in the "ON" position, the value will change after 1.5 s	10 - 14*1
SRR - GND	Ignition switch in the "ON" position, the value will change after 1.5 s	10 - 14*1
FR+ - GND	The vehicle is moving at a speed of 30 km/h	pulses
IG - GND	Ignition switch in the "ON" position	10-141
MR - GND	Ignition switch in the "ON" position, the value will change after 1.5 s	no more than 2
Ts - GND	Ignition switch in the "ON" position, terminals Ts - E1 are shorted	no more than 2
	Ignition switch in the "ON" position, terminals Ts - E1 are not connected	10 - 14

Table. Voltage at the pins of the ABS control unit connector (models from 1996). (continued)

Conclusion	Measurement condition	Voltage, V
MT - GND	Ignition switch in the "ON" position; the value will change after 1.5 s	10 - 14*1
(EXI - GND)[2]	Ignition switch in the "ON" position	pulses
SRH1 - GND	Ignition switch in the "ON" position; the value will change after 1.5 s	10 - 14*1
SLH2 - GND	Ignition switch in the "ON" position; the value will change after 1.5 s	10 - 14*1
SLR - GND	Ignition switch in the "ON" position; the value will change after 1.5 s	10 - 14*1
FR - GND	Vehicle traveling at 30 km/h (Ignition switch in the "OFF" position)*2	pulses (circuit closed)*2
R- - GND	Ignition switch in the "OFF" position	circuit closed
SR - GND	Ignition switch in the "ON" position, the value will change after 1.5 seconds	10-14
Tc - GND	Ignition switch in the "ON" position; the "Tc" - "E1" pins of the diagnostic connector are shorted	no more than 1
	Ignition switch in the "ON" position; the "Tc" - "E1" pins of the diagnostic connector are not connected	10 - 14
FL+ - GND	The vehicle is moving at a speed of 30 km/h	pulses
FL- - GND	Vehicle traveling at 30 km/h (Ignition switch in the "OFF" position)*2	pulses (circuit closed) **
(EXO - GND)[2]	Ignition switch in the "ON" position, the value will change after 1.5 seconds	10 - 14*1
SLH1 - GND	Ignition switch in the "ON" position, the value will change after 1.5 seconds	10 - 14*1
RR+ - GND	The vehicle is moving at a speed of 30 km/h	pulses
GND - "ground"	Ignition switch in the "OFF" position	circuit closed
RL+ - GND	The vehicle is traveling at 30 km/h	pulses
WA - GND	Ignition switch from "OFF" to "ON"	2 V (no more than 3 sec) → 10 - 14 V*1
(GS2 - GND)	Ignition switch in the "ON" position, the vehicle is on level ground	1,5 - 3
(GS1 - GND)	Ignition switch in the "ON" position, the vehicle is on level ground	1,5 - 3
RR- - GND	The vehicle is moving at a speed of 30 km/h (Ignition switch in the "OFF" position)*2	pulses (circuit closed)*2
STP - GND	Brake pedal depressed, ignition switch in the "ON" position	8 - 14
	The brake pedal is released, the ignition switch is in the "ON" position	no more than 2
GND2 - "ground"	The ignition switch is in the "OFF" position	circuit closed
RL- - GND	Vehicle traveling at 30 km/h (Ignition switch in the "OFF" position)*2	pulses (circuit closed)*2
(GST - GND)	Ignition switch in the "ON" position, the value will change after 1.5 seconds	1,5 - 3

*1: (for the fail-safe operating mode of the ABS electronic control unit (FAIL SAFE)). If the ABS indicator is lit, testing is not possible. On the "WA" terminal, for the test the voltage must be less than 2 V; on all other terminals — because the pressure modulator is prohibited from operating, the voltage is 0.

(): 4WD models up to 1997

()[2]: models from 1997

Body

Clips (push rivets)

Removal and installation

Clips (push rivets)

If clips (push rivets) are used to secure components, follow the correspondin g illustrations when removing and inst alling them (see the symbols in the illu strations).

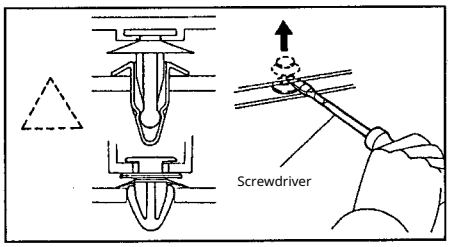

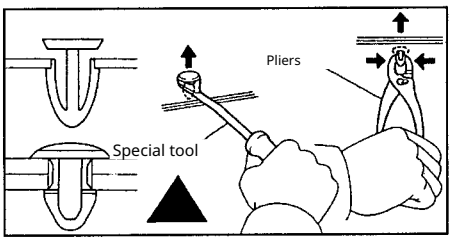

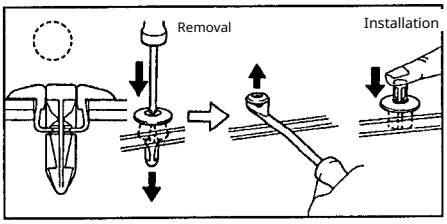

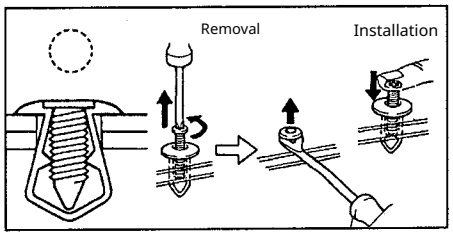

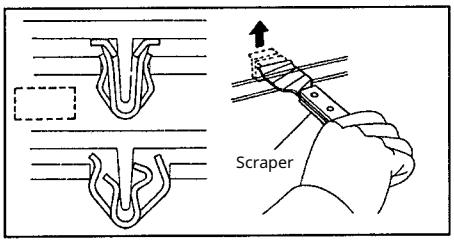

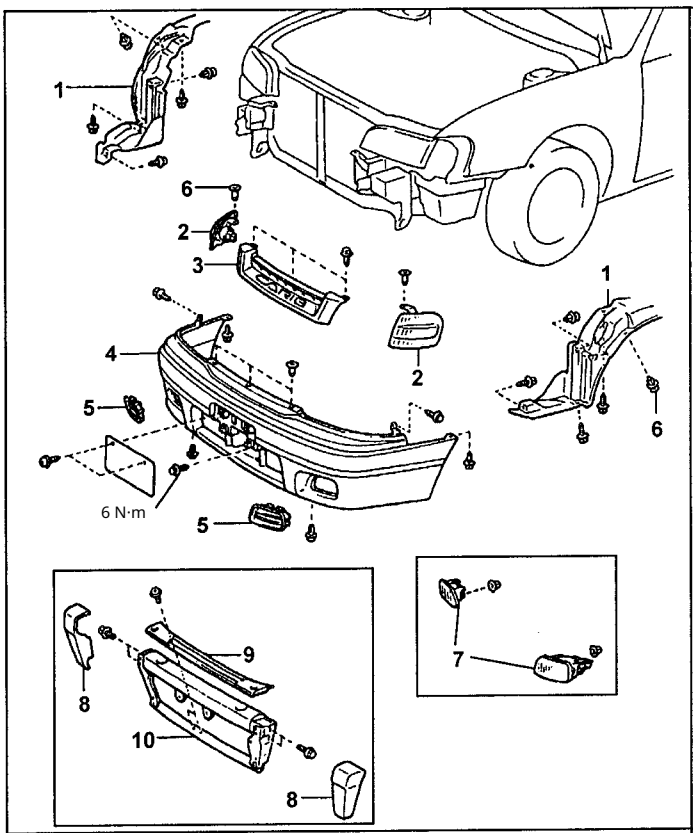

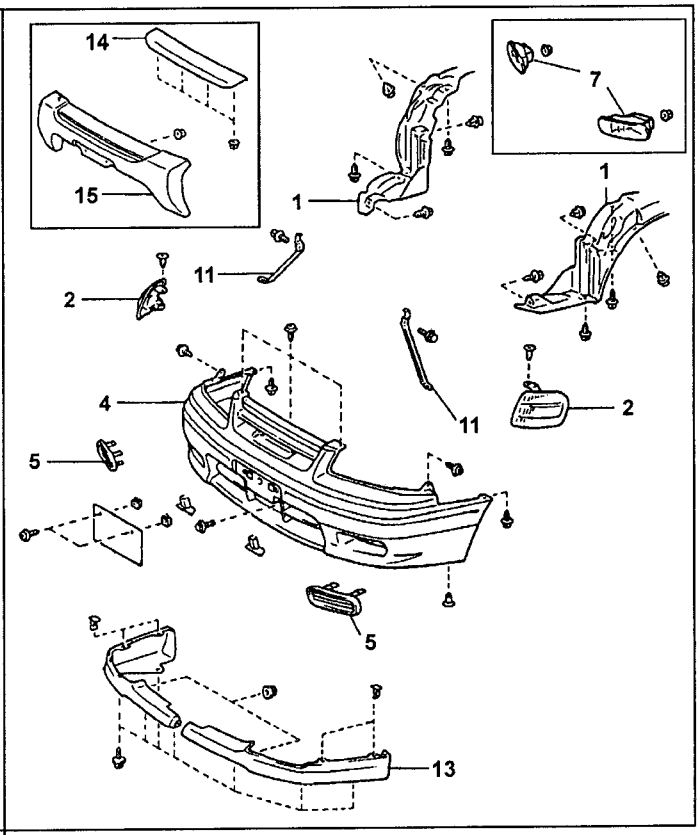

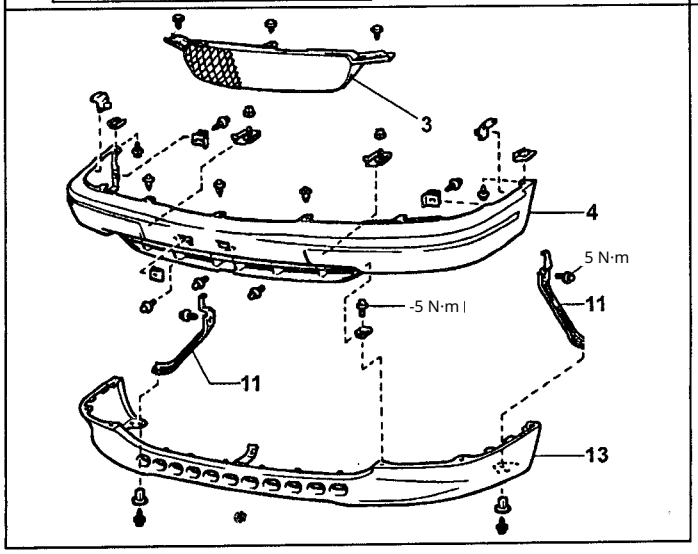

Front bumper.

1 - wheel housing liner,

2 - side turn signal,

3 - radiator grille,

4 - bumper cover,

5 - decorative grille (models without additional front position lights),

6 - bracket,

7 - additional front marker lights, 8 - side cove r for fastening the decorative bumper trim,

9 - upper cover of the bumper trim fastening

10 - decorative trim of the bumper cover 11 - side bracket for fastening the bumper cover

13 - lower decorative trim of the bumper cover

14 - upper cover of the bumper trim fastenin g

15 - decorative trim of the bumper cover

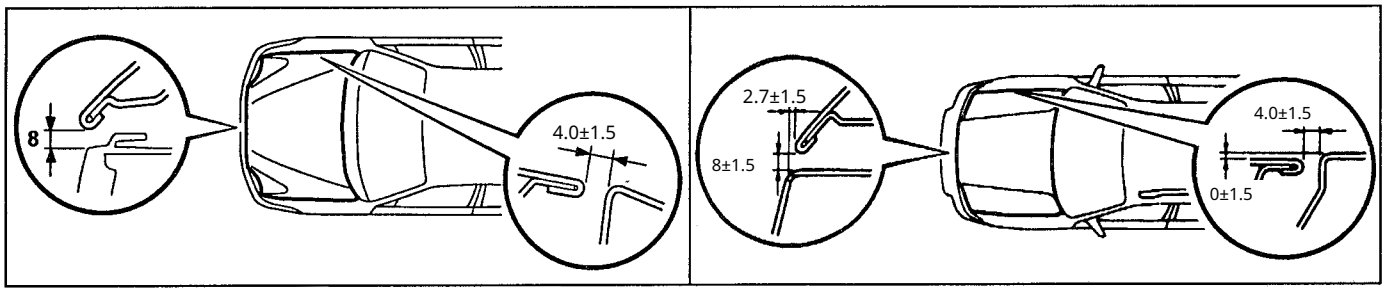

Adjustment of the gap between the hood and the vehicle body.

Front bumper

Removal and installation of the front bumper

When removing and installing the front b umper, follow the corresponding assembl y illustration "Front bumper".

Hood adjustment

Note: Adjustment of the hood and its lock c annot be performed when the hood and loc k fastenings are made with centering bolts. During adjustment, these bolts should be re placed with standard bolts with washers, as shown in the illustration below.

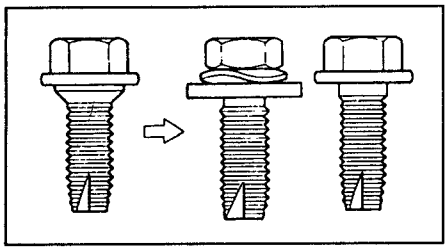

1. Adjustment of the hood in the longitudin al or transverse directions. Adjust t he position of the hood in the longitudin al and transverse directions by loosening th e bolts that secure the hinges to the hood.

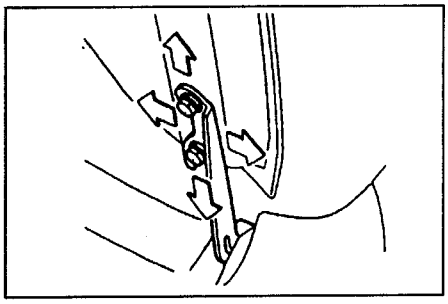

2. Adjustment of the front edge of the hood In the vertical direction. Adjust th e position of the front edge of the hood by t urning the cushions (pads).

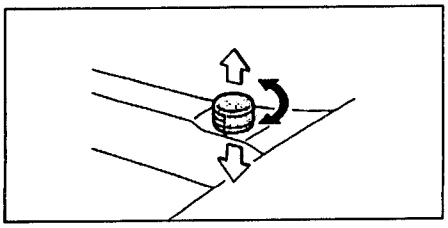

3. Adjustment of the hood latc h. Adjust the position of the hood latch b y loosening the mounting bolts.

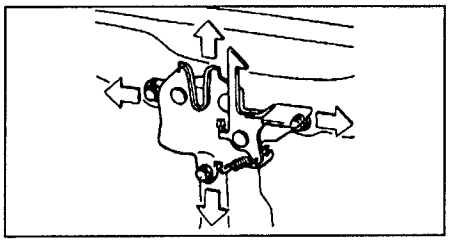

4. Adjust the gap between the hood and the vehicle body as shown in the illustration "Adjustment of the gap between the hood and the vehicle body".

Rear bumper

Removal and Installation of the Rear Bumper

When removing and installing the bum per, refer to the corresponding assem bly illustrations "Rear Bumper".

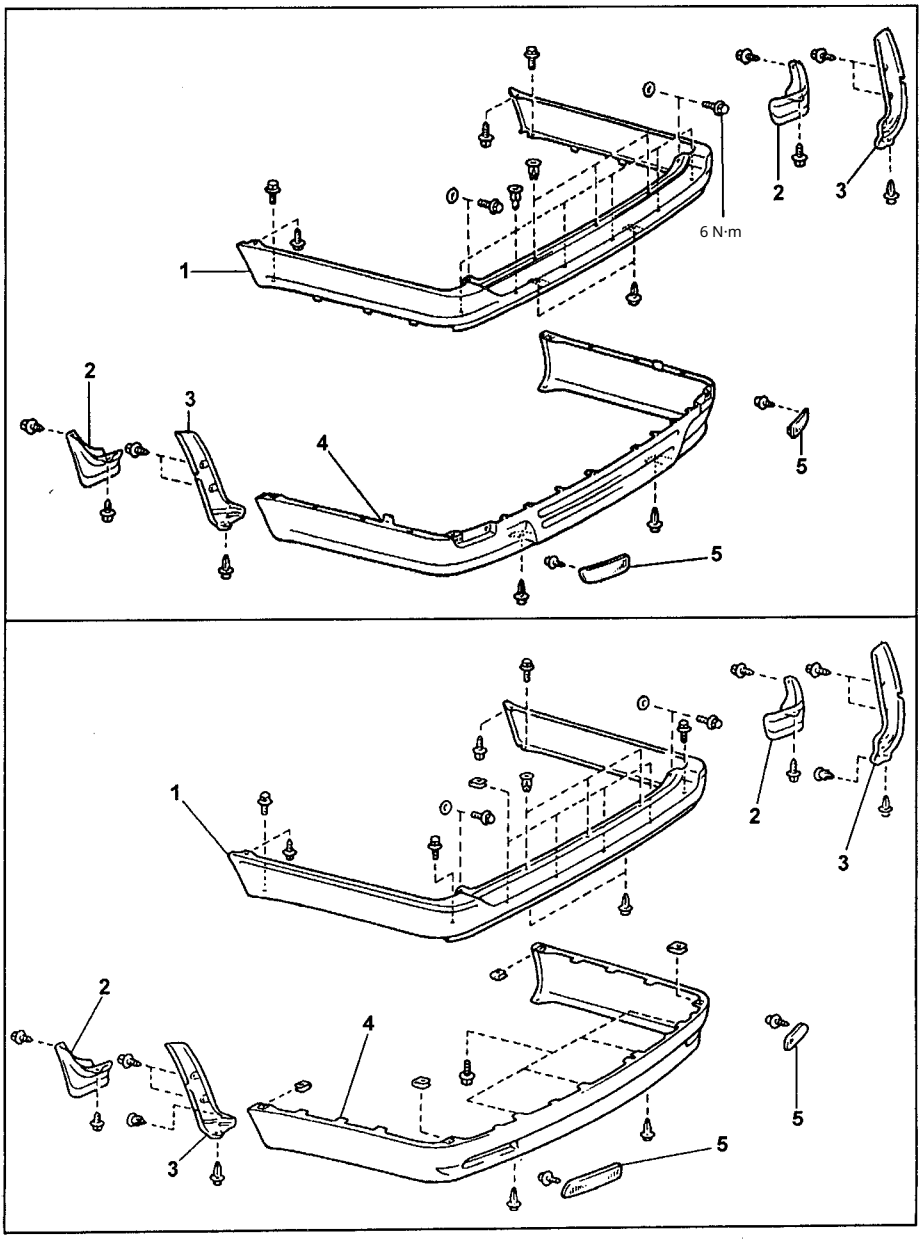

Rear bumper. 1 - upper rear bumper trim, 2 - splash guard, 3 - decorative trim, 4 - lower rear bumper trim, 5 - rear side marker lights.

Tailgate Adjustment

Note: Adjustment of the tailgate and its latch is not possible when the tailgate and latch are mounted with centering bolts. When making adjustments, these bolts should be replaced with ordinary bolts.

1. Adjustment of the tailgate in the longitudinal and transverse directions. Loosen the mounting bolts and adjust the position of the tailgate as shown in the illustration.

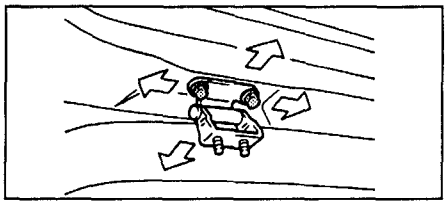

2. Adjustment of the rear door latch striker.

Slightly loosen the screw(s) fastening the latch striker and adjust the position of the striker.

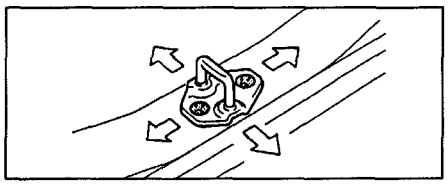

3. Adjust the gap between the rear door and the vehicle body as shown in the illustration "Adjusting the gap between the rear door and the vehicle body".

Side doors

Adjustment of the side doors 1. Adjust the gaps between the side doors and the vehicle body as shown in the illustration "Adjustment of the gap between the side doors and the vehicle body".

2. Adjustment of the door in the longitudinal and vertical directions.

Loosen the bolts securing the door hinges to the body and then adjust the position of the door.

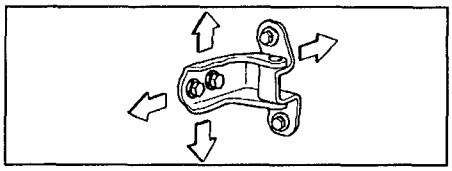

3. Adjustment of the door in lateral and vertical directions. Loosen the bolts securing the door hinges to the door and adjust the position of the door.

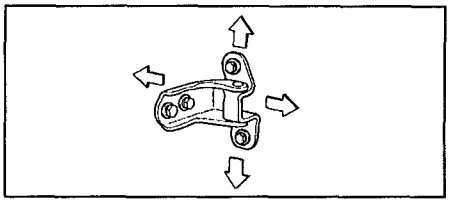

4. Adjustment of the door latch striker.

a) Ensure that the door hinging and the door latch levers are adjusted correctly.

6) Slightly loosen the screws securing the striker and, tapping with a plastic hammer, adjust the striker's position.

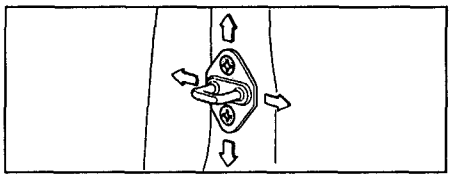

c) Tighten the bracket mounting screws. Front door disassembly 1. (Models without power windows) Remove the window crank handle.

2. Remove the inner door release handle.

3. (Models with power windows) Remove the power window control panel as shown in the illustration.

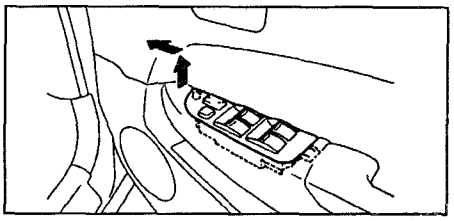

4. Remove the inner door closing handle.

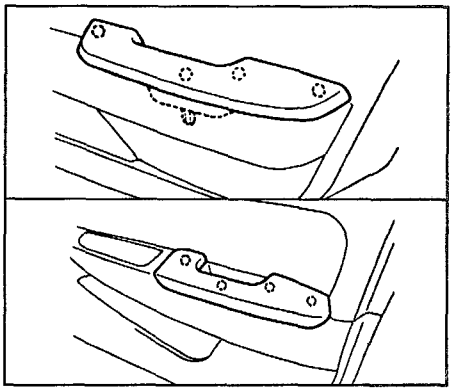

5. Remove the inner cover of the side rear-view mirror.

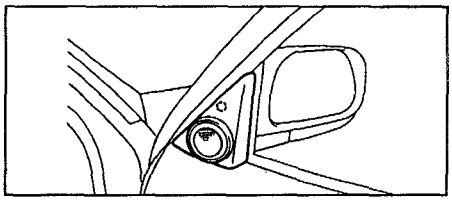

6. Remove the door trim as shown in the illustrations.

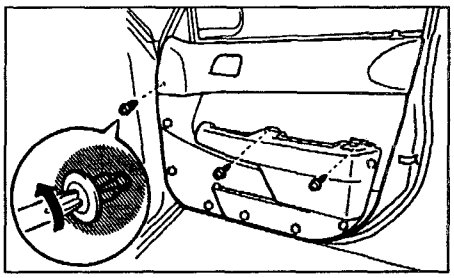

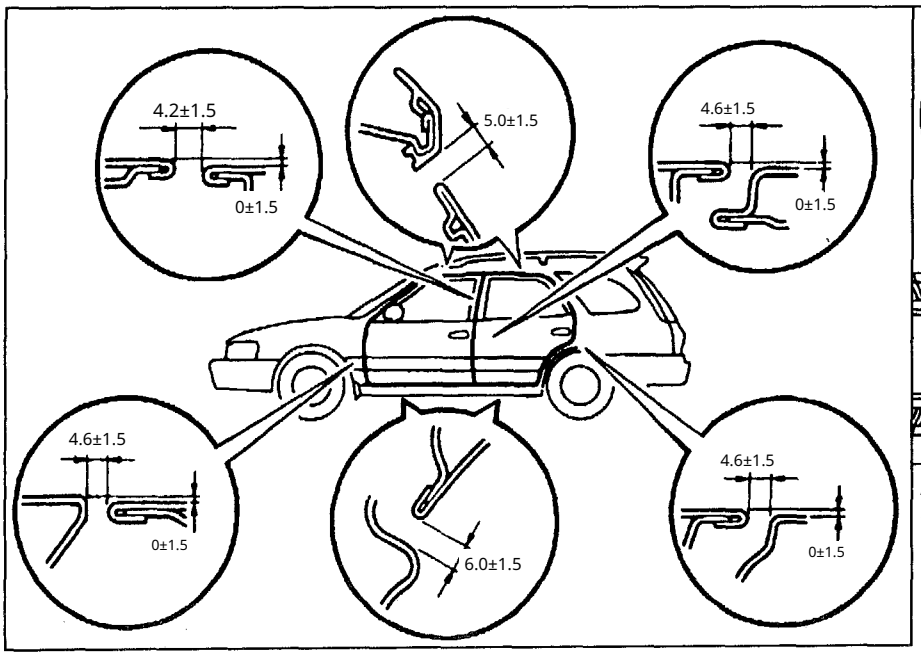

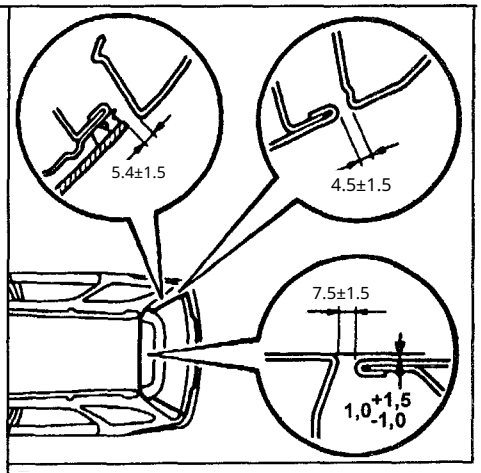

Adjustment of the gap between the rear panel and the vehicle body. Adjustment of the gap between the side doors and the vehicle body.

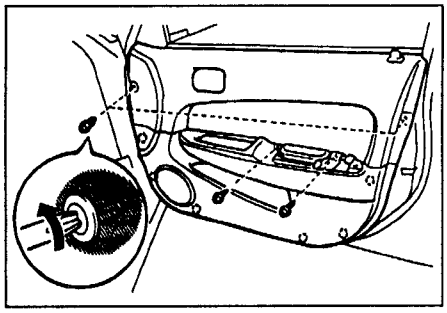

7. (Models with speaker) Remove the speaker.
8. (Models without speaker) Remove the speaker hole cover. 9. Remove the service hole cover.

10. (Models with tweeters Remove the tweeter frequency.
11. (Models with side mirrors on the front doors of the vehicle) Remove the side mirrors.
12. (Models with side mirrors on the front fenders of the vehicle) Remove the outer door cover. 13. Remove the door glass.

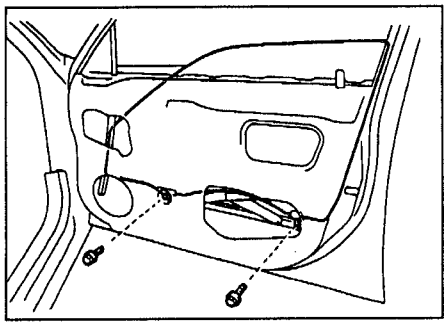

14. Remove the glass seal. 15. Remove the window regulator mechanism.

a) (Models without power windows) Unscrew the five mounting bolts and remove the window regulator mechanism.

b) (Models with power windows) Unscrew the six mounting bolts, disconnect the harness connector and remove the window regulator mechanism together with the motor. 16. Remove the rear lower frame of the glass guide.

17. Remove the inner opening rod door handle removal.
18. Remove the door lock release button of the door.
19. Remove the door lock.
a) (Models without power door lock) Unscrew the mounting screws and remove the door lock. b) (Models with power door lock) Disconnect the power door lock connector, unscrew the mounting screws and remove the door lock assembly with the power actuator.

20. Unscrew the mounting screws and remove the exterior door opening handle.
21. Remove the lock cylinder.

Front door assembly When assembling the front doors, follow the corresponding assembly illustrations.

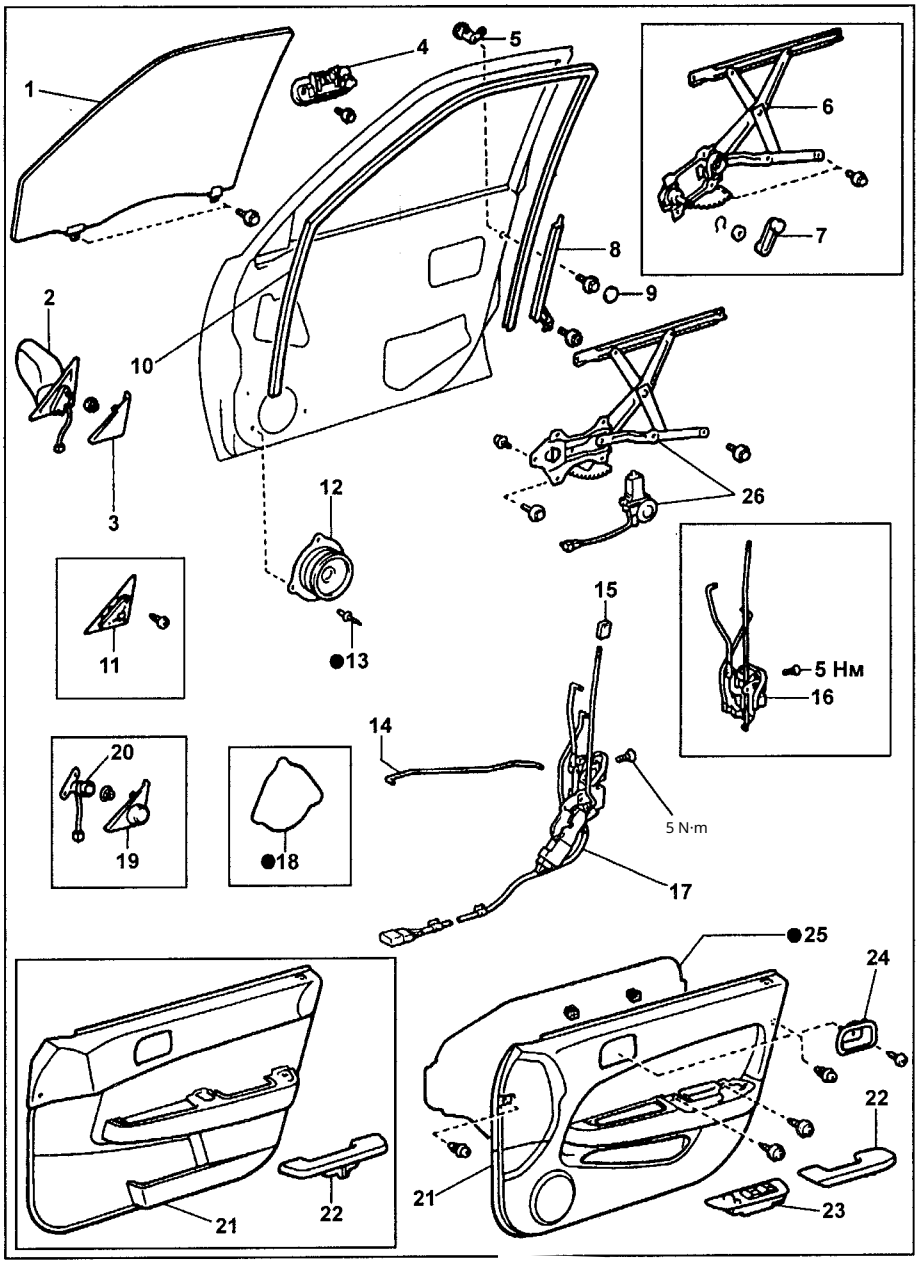

Front door. 1 - door glass, 2 - side mirror, 3 - inner cover of the side mirror, 4 - exterior door opening handle, 5 - lock cylinder, 6 - window regulator mechanism (models without power window actuator), 7 - window crank handle (models without power window actuator), 8 - rear lower frame of the glass guide, 9 - decorative cap, 10 - door glass seal, 11 - outer cover of the side mirror (the side mirror is mounted on the front fender of the vehicle), 12 - speaker, 13 - holder, 14 - inner door opening rod, 15 - lock release button, 16 - door lock (models without power door lock), 17 - door lock (models with power door lock), 18 - speaker cover for the opening, 19 - inner cover of the side mirror (models with tweeter speakers), 20 - tweeter speaker, 21 - door trim, 22 - inner door closing handle, 23 - power window control panel, 24 - inner door opening handle, 25 - service hole cover, 26 - power window regulator mechanism. The assembly of the front side doors is carried out in the reverse order of disassembly, except for the following: performed at a 30° ± 15° angle

a) Before installation, apply adhesive to the lock mounting screws. b) (Models without power window regulators) Before installing the window crank handle, fully close the door glass, then set the window crank handle to the position shown in the illustration.

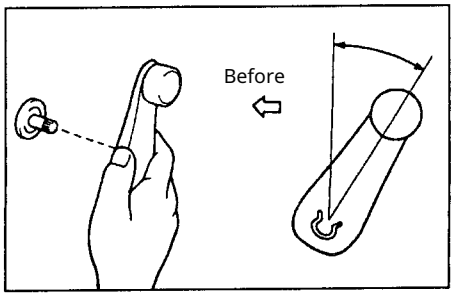

Rear door disassembly

1. (Models without power windows) Remo ve the window crank handle.

2. Remove the inner door release handle.

3. (Models with power windows) Re move the panel
power window regulators, as shown in the illu stration.

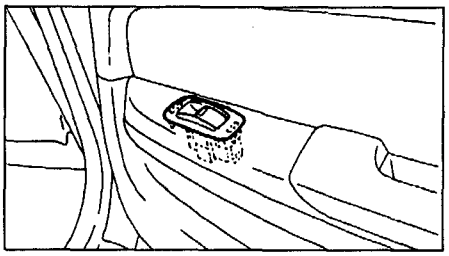

4. Remove the inner door closing handle.

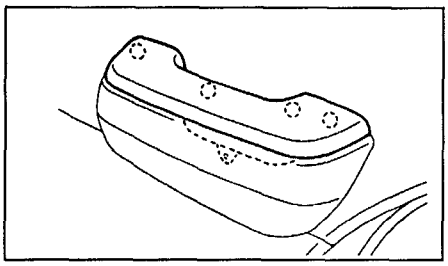

5. Remove the door trim as shown in the illustr ations.

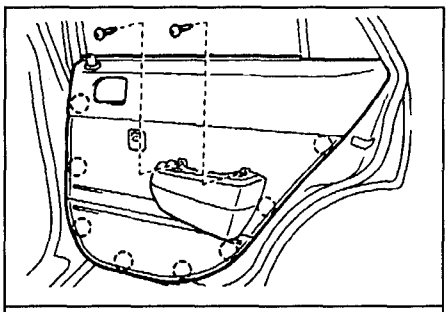

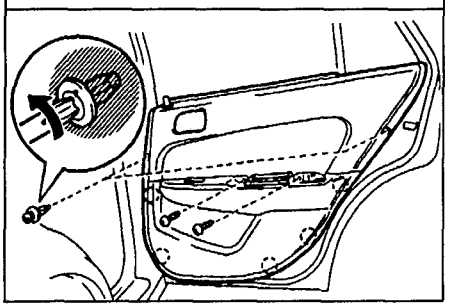

6. Remove the service opening cover.

7. Remove the glass guide. 8. Rem ove the door glass. 9. Re
move the glass seal. 10. Remov e the fixed glass of the rear door.

11. Remove the stationary seal
of the glass.

12. Remove the power window regulator mechanism seal.

13. Remove the door lock release button.

14. Remove the inner lock retaining rod.

15. Remove the inner door opening rod.

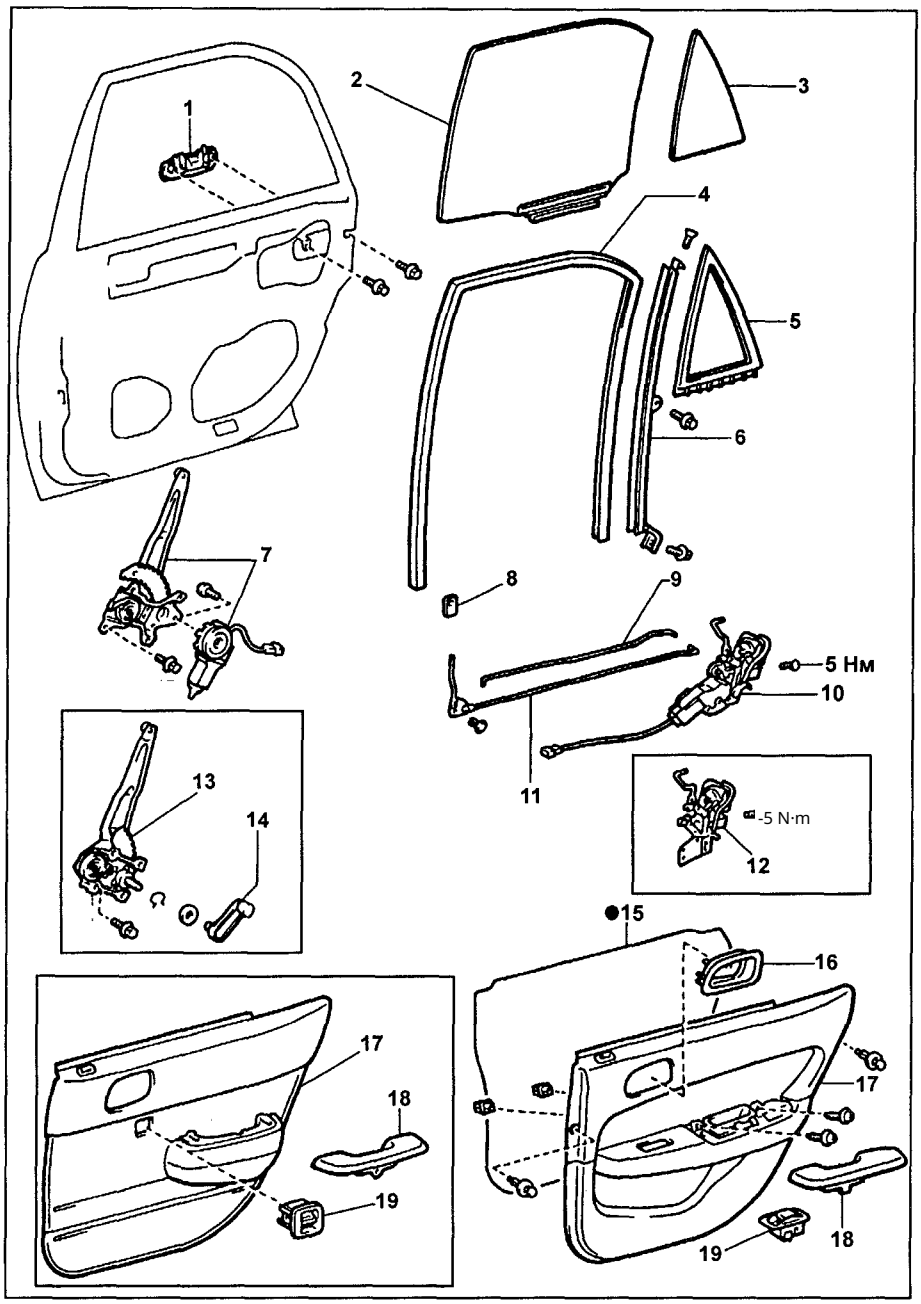

Rear door. 1 outer door-opening handle, 2 door glass, 3 - fixed rear door glass, 4 - glass seal, 5 - fixed glass seal, 6 - glass guide, 7 - power window regulator mechanis m, 8 - lock release button, 9 - inner door-opening rod, 10 - power door lock, 11 - inn er lock actuator rod, 12 - manual door lock, 13 - manual window regulator mechani sm, 14 - window regulator handle, 15 - service hole cover, 16 - inner door-opening handle, 17 - door trim, 18 - inner door-closing handle, 19 - power window control p anel. 16. Remove the door lock.

17. Remove the exterior door opening handl e.

Assembly of the rear doors

When assembling the rear doors, follow th e corresponding assembly drawings.

The assembly of the rear doors is carried ou t in the reverse order of disassembly, except for the following:

a) Before installation, apply adhesive to t he lock mounting screws. 6) (Models without power window drive) Before insta lling the window crank handle

Completely close the door glass, then set t he window lifter handle to the position sho wn in the illustration.

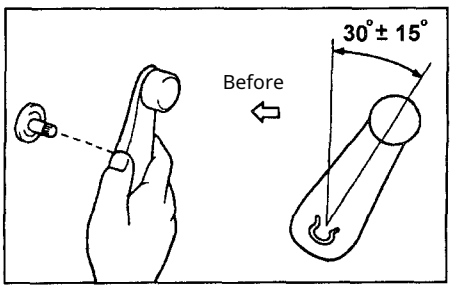

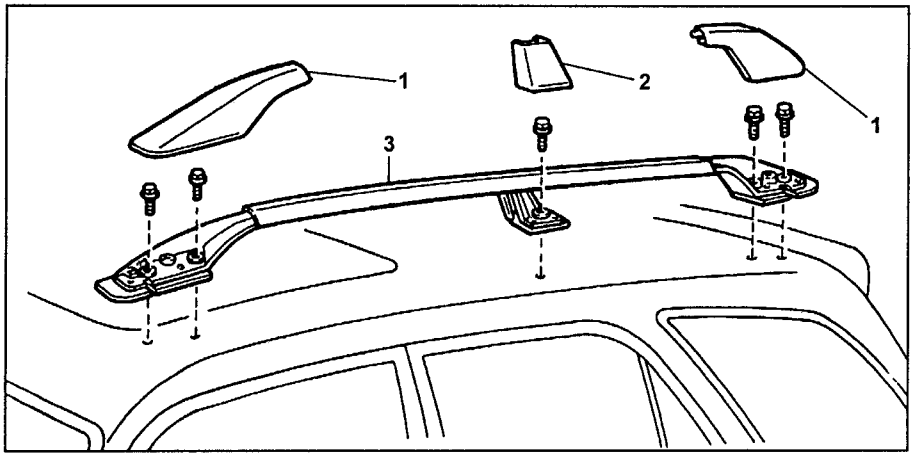

Trunk. 1 - trunk side decorative covers, 2 - central trunk decorative cover, 3 - trunk support.

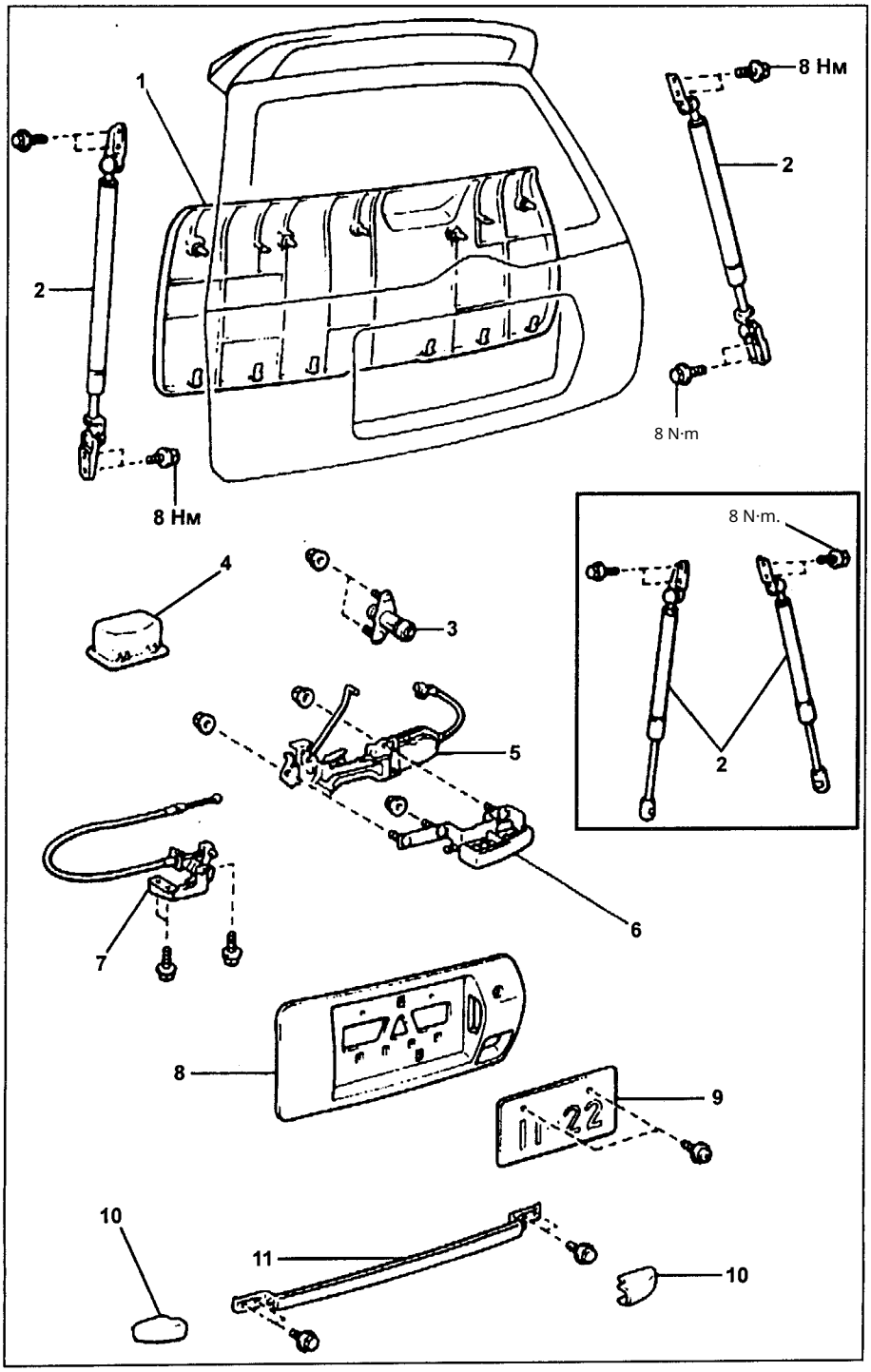

Trunk

Removal and installation of the trunk

When removing and installing the trunk follow the assembly drawing "Trunk".

Rear spoiler

Removal and installation of the rear spoiler

When removing and installing the rear spoiler follow the assembly drawing "Rear spoiler".

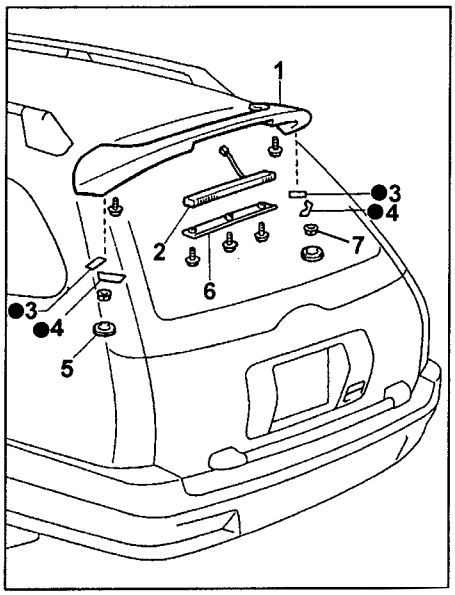

Rear spoiler. 1 - rear spoiler, 2 - Supplementary brake light, 3 - front spacer, 4 - side spacer, 5 - Decorative plug, 6 - lower mounting cover for the supplementary brake light, 7 - nut.

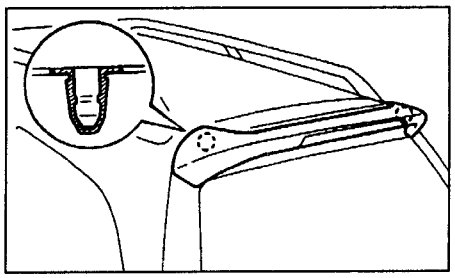

Bracket mounting locations.

Tailgate

Disassembly and assembly Tailgate

When disassembling and assembling the tailgate, refer to the assembly figure "Tailgate".

Rear door. 1 - internal lower-rear door trim, 2 - strut shock absorber, 3 - lock cylinder, 4 - rear door closing handle, 5 - rear door lock actuator, 6 external rear door opening handle, 7 - rear door lock, 8 external rear door trim, license plate, 10 - 9 - Decorative-rear cover, 11 - outer handle.

Windshield

Removal and Installation

windshield

1. Remove the following parts:
   a) Windshield wiper arms.
   b) Ventilation seal re-
   hood brushes.
   c) Hood ventilation grille.
   g) Upper trim of the front pillars.
   д) Interior mirror.
   e) (Models without a sunroof) Front interior dome light.
   g) (Sunroof models) Sunroof control p anel and front interior light assembly.
   3) Handles and sun visors.
2. Remove the windshield molding.
3. Remove the windshield.
   a) Thread a wire from the interior and secure the ends of the wire in the special clamps.

   Using the wire, cut through the adhesive laye r as shown in the illustration and remove the glass.

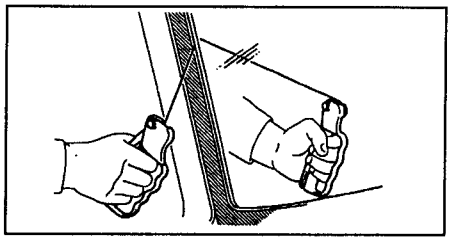

   b) Using a special tool, cut through the ad hesive layer as shown in the illustration a nd remove the glass.

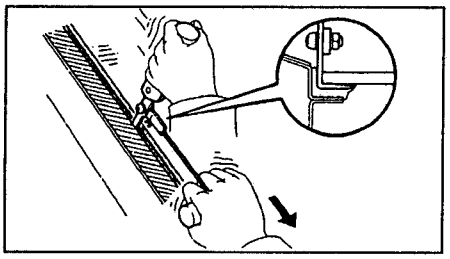

Attention:

- When cutting, leave as much adhesive on the body as possible.
- Apply adhesive tape to the outer surf ace of the windshield to avoid scratchin g the surface.
- When removing the glass, try not to damage painted surfaces and trim. To avoid damaging the panel when remov ing the windshield, place a plastic shee t between the wire and the panel. Win dshield installation 1. Align and clean t he mating surface of the body.

   a) Use a knife to level the adhesive layer r emaining on the body; be careful not to d amage the vehicle's paint finish.

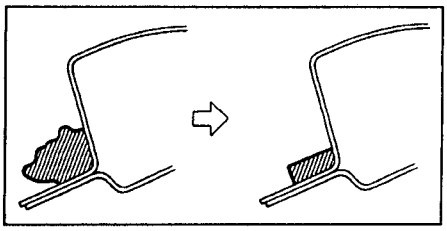

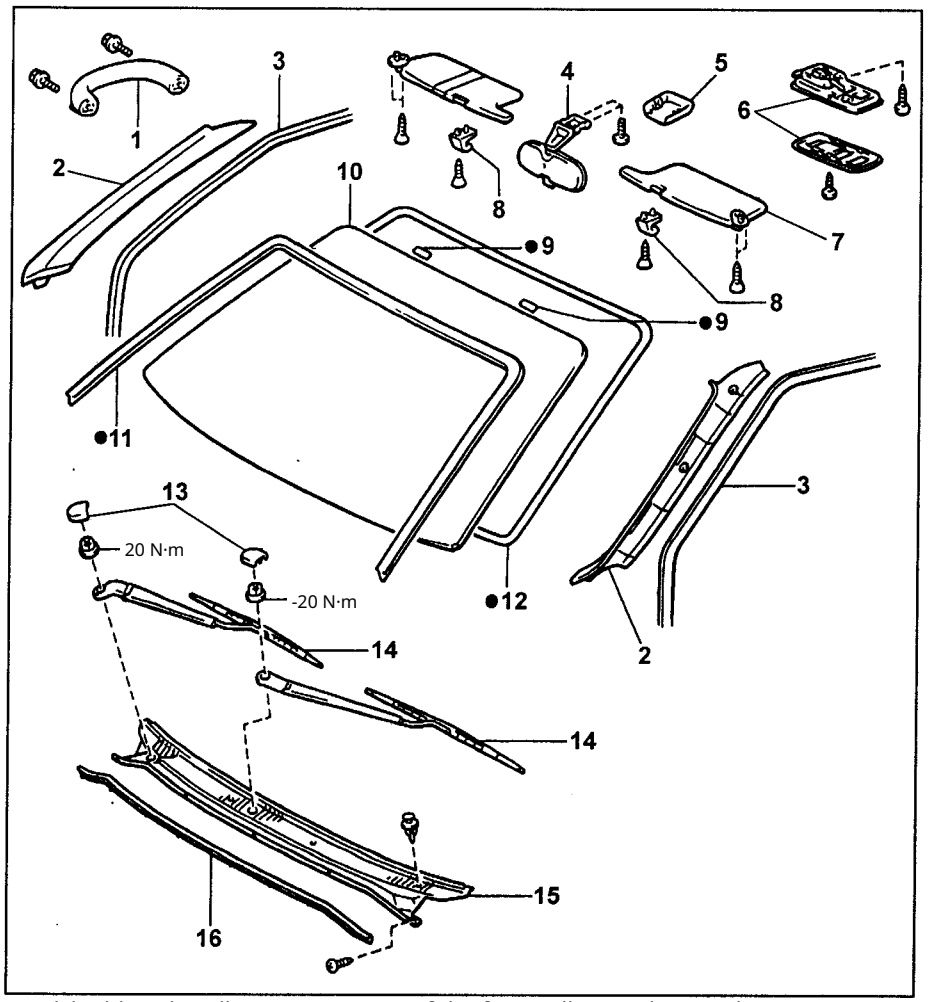

Windshield. 1 - handle, 2 - upper trim of the front pillar, 3 - door seal, 4 - interior mir ror, 5 - decorative cover of the interior mirror mounting, 6 - sunroof control panel a nd front dome light assembly (models with sunroof), 7 - sun visor, 8 - retainer, 9 - st opper, 10 - windshield, 11 - molding, 12 - glass seal, 13 - decorative cover of the nut for the wiper arm mounting, 14 - wiper arm, 15 - ventilation grille, 16 - ventilation gr ille seal.

   b) Clean the cut surface on the body with a piece of cloth dampened with solvent.

2. Clean the windshield.
   a) Using a scraper, remove the adhesive re maining on the glass.
   b) Clean the cut surface on the glass with s olvent.
3. Remove the old stoppers and install th e new ones as shown in the illustration.

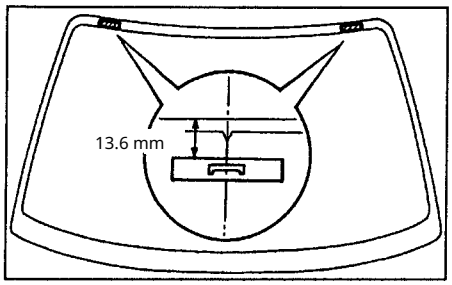

4. Clean with solvent the contact pads on t he glass measuring 40 mm along the enti re edge.
5. Install the seal as shown in the illustration.

Offset from the glass edge:
Top and side edges ..... 7 mm
Bottom edge ..... 10 mm

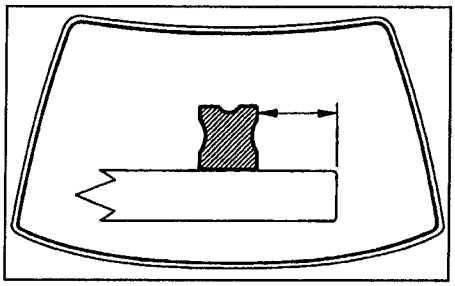

6. Apply alignment marks to the glass and the vehicle body.
   a) Position the glass as shown in the illust ration.

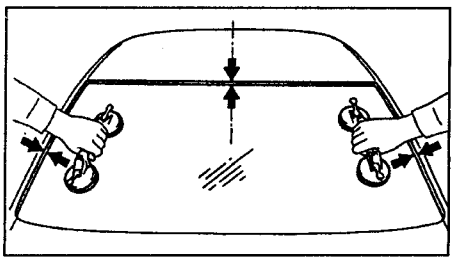

   c) Apply alignment marks to the glass and the vehicle body.
   d) Remove the glass.

7. Coat the contact surface of the body with primer.

Attention:

- primer drying time not less than 3 minutes.
- do not apply primer to the adhesive.
- an opened tube of primer must not be reused.
- do not apply primer to new stoppers.

8. Coat the flange and the contact surface of the glass with primer as shown in the illustration below.

Attention:

- primer drying time not less than 3 minutes.
- do not apply primer to the adhesive.
- open tube with primer do not reuse.

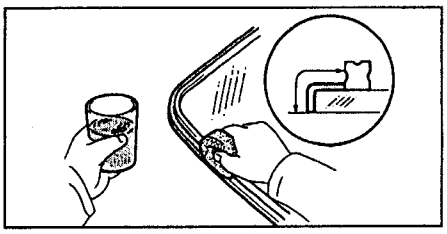

9. Using a syringe, apply adhesive to all contact surfaces of the glass along the sealant, as shown in the illustration.

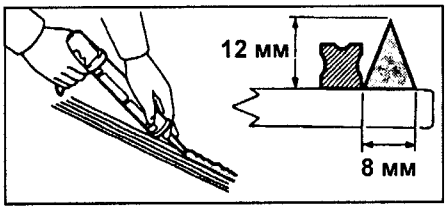

10. Install the glass.

Note: make sure the seal is installed correctly.

a) Position the glass according to the alignment marks and carefully press it in along the rim.

b) Apply adhesive to the edge of the glass with a spatula.

c) Press the glass firmly so that it was held with adhesive.

c) Remove the excess adhesive.

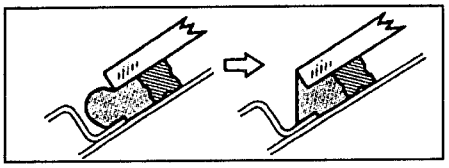

11. Check and eliminate any leak in the joint.

a) After the curing time has elapsed, perform a leak test on the joint.

6) Seal any joint leaks with automotive windshield sealant.

12. Apply adhesive and install the windshield molding.

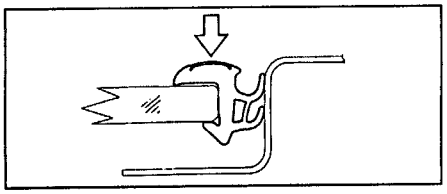

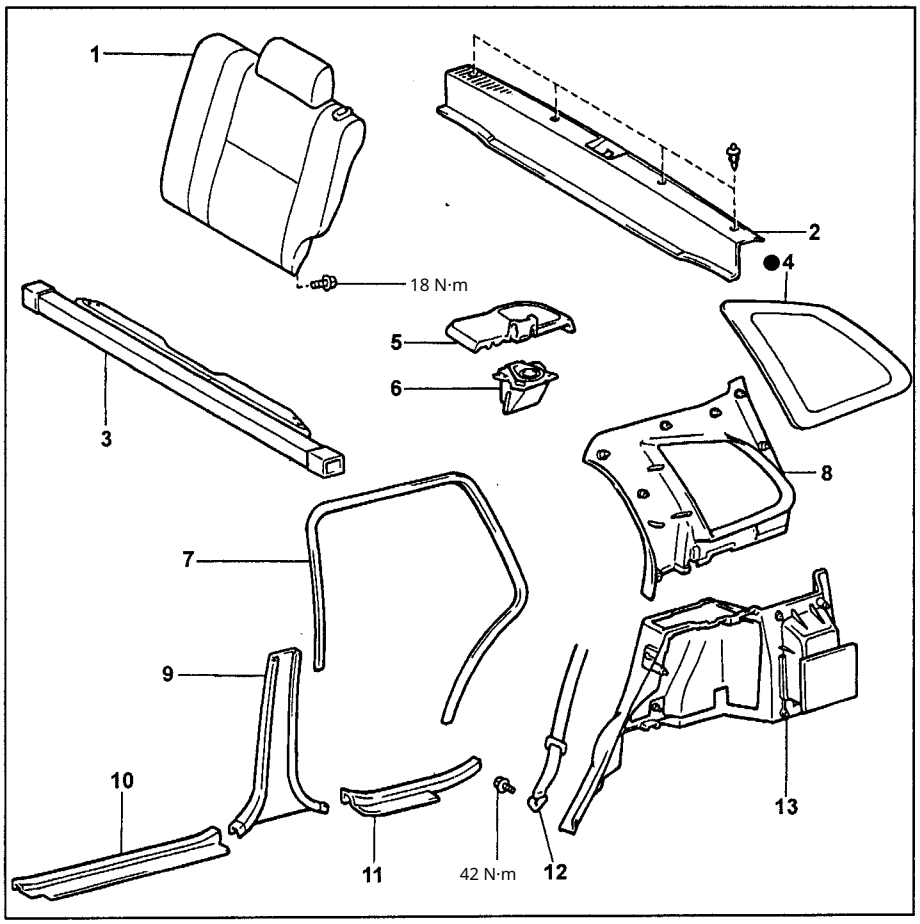

Rear fixed side window. 1 rear seat back, 2 rear door sill trim, 3 cargo area cover, 4 rear fixed side window, 5 speaker decorative cover, 6 speaker, 7 rear side door seal, 8 upper side trim of the cargo area, 9 lower trim of the center pillar, 10 front side door sill trim, 11 rear side door sill trim, 12 seat belt, 13 lower side trim of the cargo area.

13. After installing the glass, reinstall the previously removed parts in the reverse order of removal.

Rear side fixed glass Removal of the rear side fixed glass

1. Remove the following items:
   a) Rear seat backrest.
   b) Front side door sill trim.
   c) Lower trim of the center pillar.
   g) Finishing of the rear side door threshold.
   d) Rear side seal of the two-door.
   e) Trunk compartment curtain.
   f) Decorative speaker cover.
   3) Speaker.
   g) Rear door sill trim.
   h) Seat belt.
   i) Lower side trim of the trunk compartment.
   j) Upper side trim of the trunk compartment.

2. Remove the fixed rear side glass.

Attention:

- When cutting, leave as much adhesive as possible on the body.
- Apply sticky tape to the outer surface of the glass to avoid scratching it. Pass a wire from the interior and secure the ends of the wire in the special clamps.

Using a wire, cut through the layer of adhesive at the locations shown in the illustration without touching the retainers.

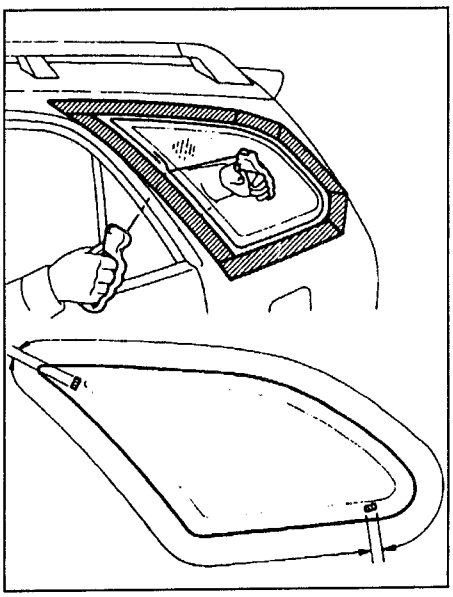

Using a wire, cut the retainers at the locations sh own in the illustration and remove the glass.

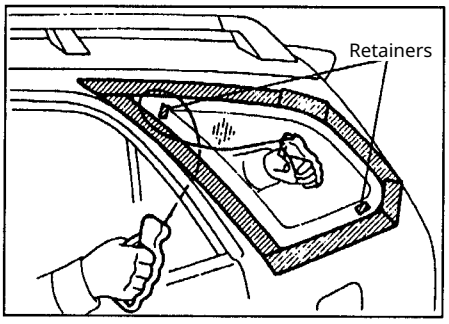

Attention:

- when removing the glass, try not to damage painted surfaces and trim.

Installation of the rear side fixed glass

1. Align and clean the contact surface of the body.
   a) Use a knife to level the adhesive layer remaining on the body; be careful not to damage the vehicle's paint finish.
   b) Clean the cut surface on the body with a piece of cloth dampened with solvent.
2. Clean the glass.
   a) Using a scraper, remove the adhesive remaining on the glass.
   b) Clean the cut surface on the glass wit h solvent.
3. Coat the contact surface of the body wit h primer. Attentio n:
   - primer drying time not less than 3 minutes.
   Do not apply primer to the adhesive.
   - An opened tube of primer must not be reused.
4. Coat the bead and the contact surface of the glass with primer.
   Attention:
   - primer drying time not less than 3 minutes.
   Do not apply primer to the adhesive.
   - open tube of primer do not reuse.
5. Using a syringe, apply the adhesive on all contact surfaces of the glass, as shown in the illustration.

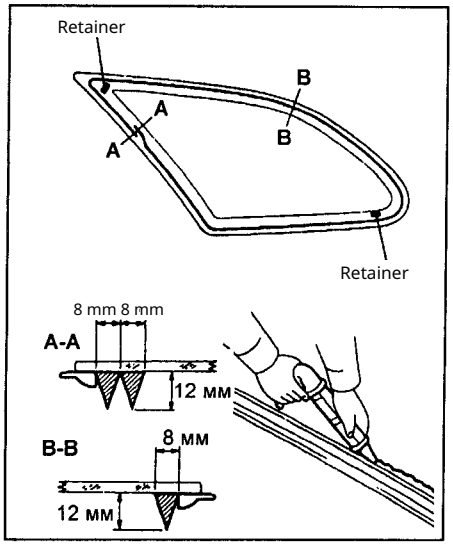

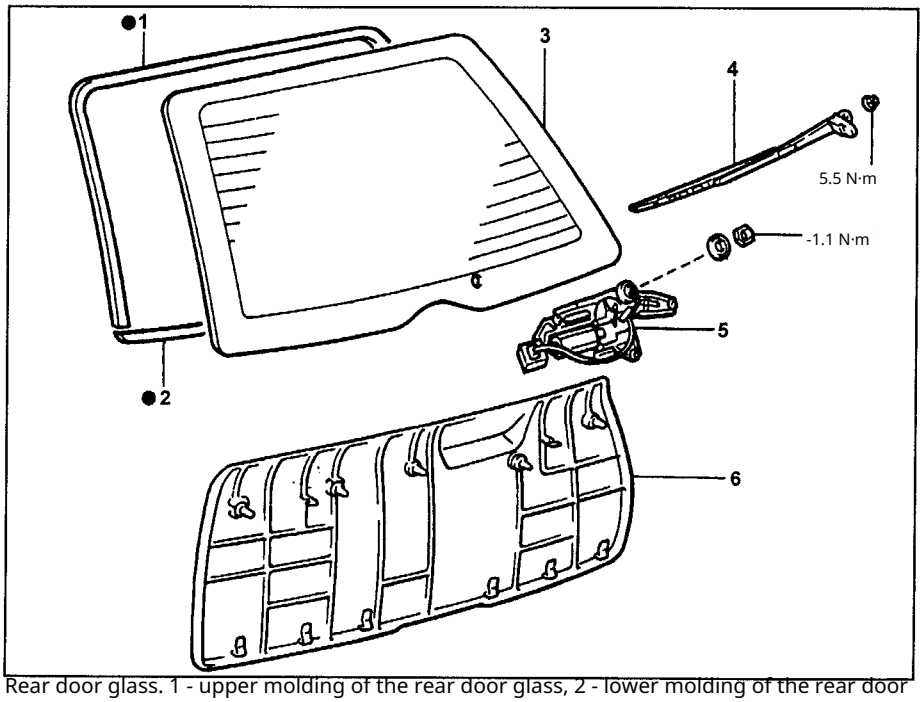

Rear door glass. 1 - upper molding of the rear door glass, 2 - lower molding of the rear door glass, 3 - rear door glass, 4 - windshield-wiper arm, 5 - windshield wi - per motor, 6 - inner lower trim of the rear door.

6. Remove the old retainers and install the n ew retainers. The installation locations are s hown in the previous illustration.
7. Install the seal along the entire edge of th e glass.
8. Install the glass.
   a) Place the glass on the vehicle body a nd carefully press it along the rim.
   b) Firmly press the glass so that it adheres to the adhesive.
9. Check and eliminate any leakage in th e connection.
   a) After the curing time has elapsed, perfor m a leak test on the joint.
   b) Eliminate joint leaks with sealant for automotive glass.

Tailgate glass

Removal of the tailgate

1. Remove the inner lower trim panel of the tai lgate.
2. Remove the windshield wiper arm. 3. Remove t he windshield wiper motor.
4. Disconnect the rear door glass heater co nnector.
5. Remove the upper and lower moldings of t he rear door glass.
6. Pull the wire from the interior and secure the ends of the wire in the clamps. U sing the wire, cut through the layer of adhe sive, taking care not to touch the retainers. The locations of the retainers are shown in the illustration.

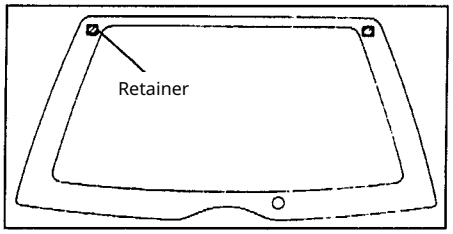

7. Remove the glass
. Rear hatch glass installation 1. Align an d clean the contact surface of the body.
   a) Use a knife to level the adhesive layer remaining on the body; be careful not to damage the vehicle's paint finish.

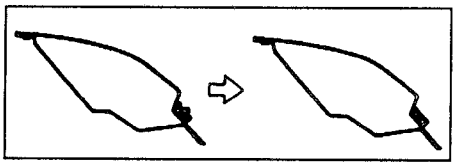

   b) Clean the cut surface on the body with a piece of cloth dampened with solvent.
2. Clean the windshield.
   a) Using a scraper, remove the adhesive remaining on the glass.
   b) Clean the cut surface on the glass wit h solvent.
3. Apply alignment marks to the glass and the vehicle body.
   a) Position the glass as shown in the illustr ation.

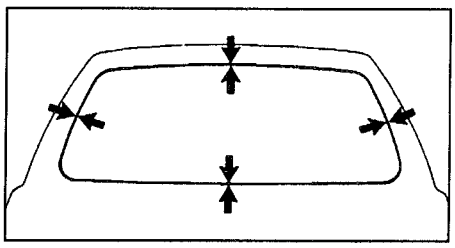

   c) Apply alignment marks to the glass and the vehicle body.
   d) Remove the glass.
4. Coat the contact surface of the bo- dy with primer.
   Attention:
   - primer drying time not less than 3 minutes.

- do not apply primer to the adhesi
- ve. An opened primer tube cannot be reused. 5. Install the seal on the gla ss. a) Attach the double-sided adhesive ta pe to the glass.

b) Position the seal on the adhesive tap e as shown in the illustration below.

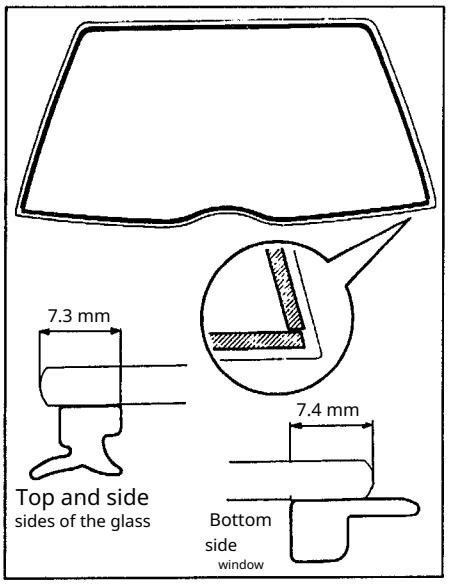

Warning: do not touch the cleaned surface of the glass.
6. Cover the edge and the contact surface of the glass with primer.
Attention:
- primer drying time not less than 3 minutes.

Do not apply primer to the adhesive.
- open tube of primer do not reuse.

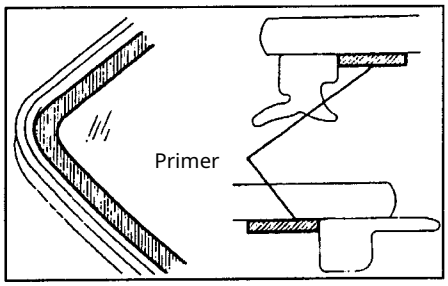

7. Using a syringe, apply adhesive to all contact surfaces of the glass as shown in the illustration.

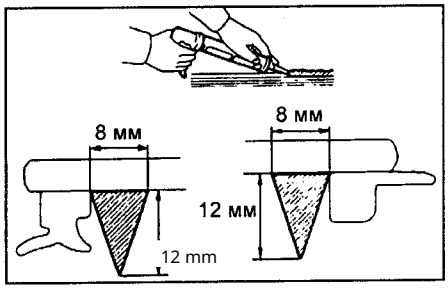

8. Remove the old stoppers and install new o nes. The installation locations are shown in t he previous illustration. 9. Install th e glass.

a) Place the glass in position and caref ully press it along the flange. b) Pres s the glass firmly so that it adheres to t he adhesive.

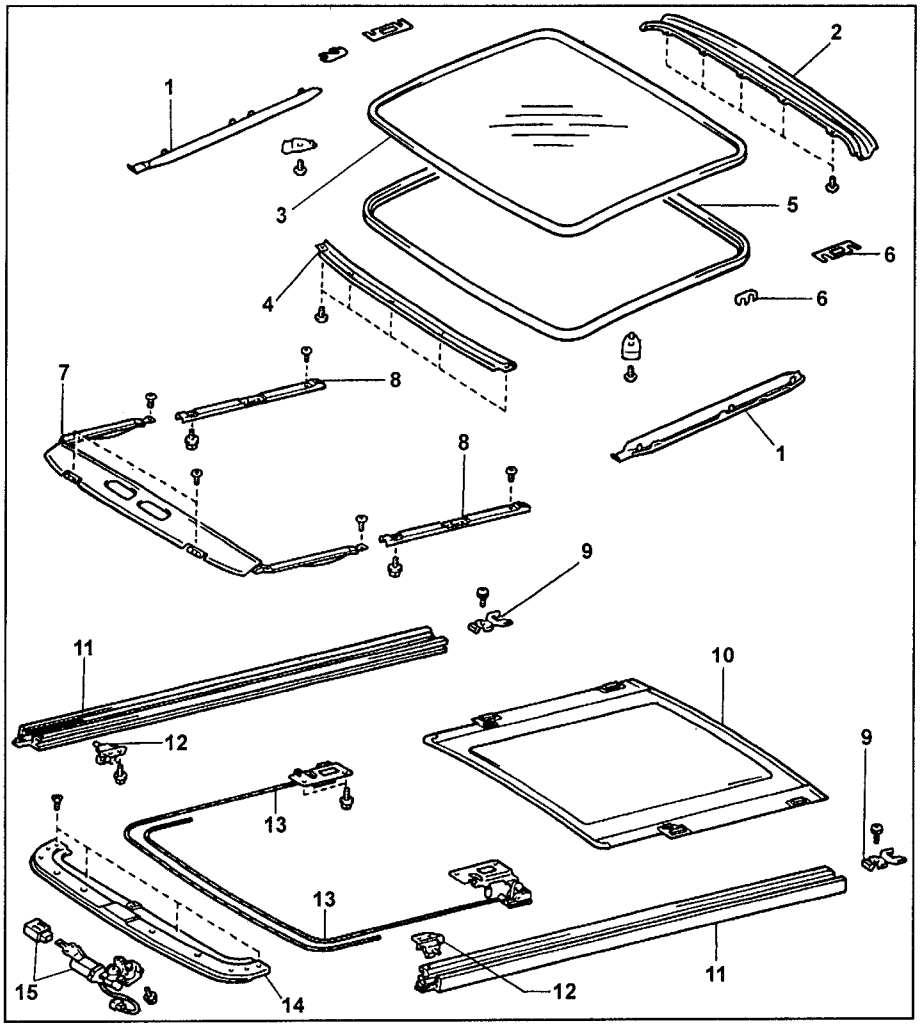

Sunroof. 1 - inner side trim of the sunroof, 2 - inner rear trim of the sunroof, 3 - sun roof glass, 4 - inner front trim of the sunroof, 5 - sunroof seal, 6 - adjustment plate, 7 - front sunroof deflector, 8 - side sunroof deflector, 9 - connecting bracket, 10 - su nshade, 11 - side cable guide, 12 - front bracket for mounting the sunroof glass, 13 - drive ca - ble and rear bracket for mounting the sunroof glass, 14 - front cable gu ide, 15 - electric motor. 9. Check and eliminate any non-seal- 2. Check that the width of the seal tightness of the connection. around the sunroof is uniform.

a) After the curing time has elapsed, perfor m a leak test on the joint.

b) Eliminate connection leaks with a glass sealant.

Sunroof

Removal and installation of the sunroof

When removing and installing the sunro of, follow the corresponding assembly ill ustration "Sunroof".

Sunroof adjustment

1. Check the height position of the sunroof relative to the vehicle roof, as shown in the illustration.

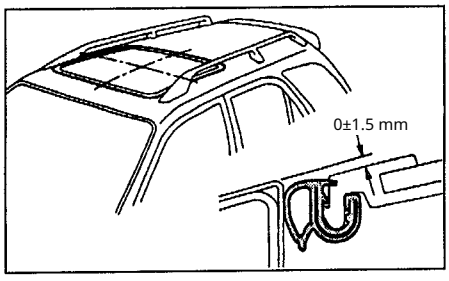

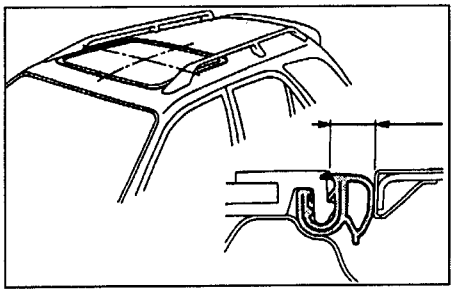

3. Adjust the height position of the sunroof by ch anging the thickness of the adjustment shims.

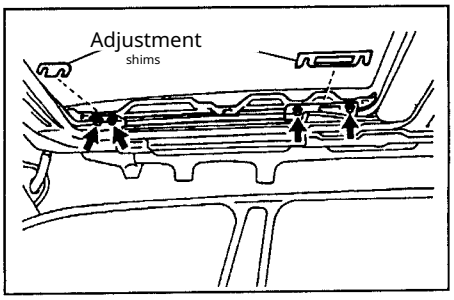

4. Adjust the position of the hatch in the l ongitudinal and transverse directions To adjust, loosen the bolts securing the hatc h shown in the illustration and adjust the position of the hatch.

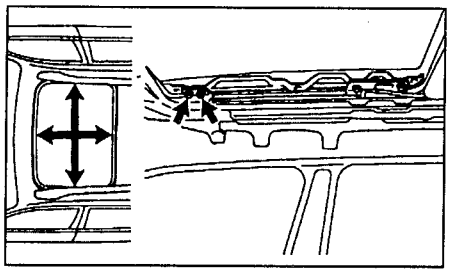

Instrument panel (type 1)

The table lists the symbols, types, and siz es of the fasteners for the instrument pan el.

	Type	Dimensions, mm
(A)	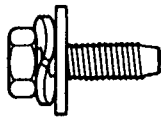	∅ = 6 L = 22
(B)	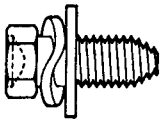	∅ = 8 L = 20
(C)		∅ = 5 L = 20
(D)	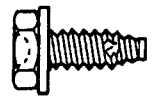	∅ = 6 L = 20
(E)		∅ = 6 L = 20
(F)		0 = 5.22 L = 14
(F)		0 = 5.22 L = 16
(G)		0 = 5.22 L = 14
(H)		0 = 5.22 L = 14
(I)		0 = 5.22 L = 16
(J)	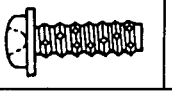	0 = 5.22 L = 18

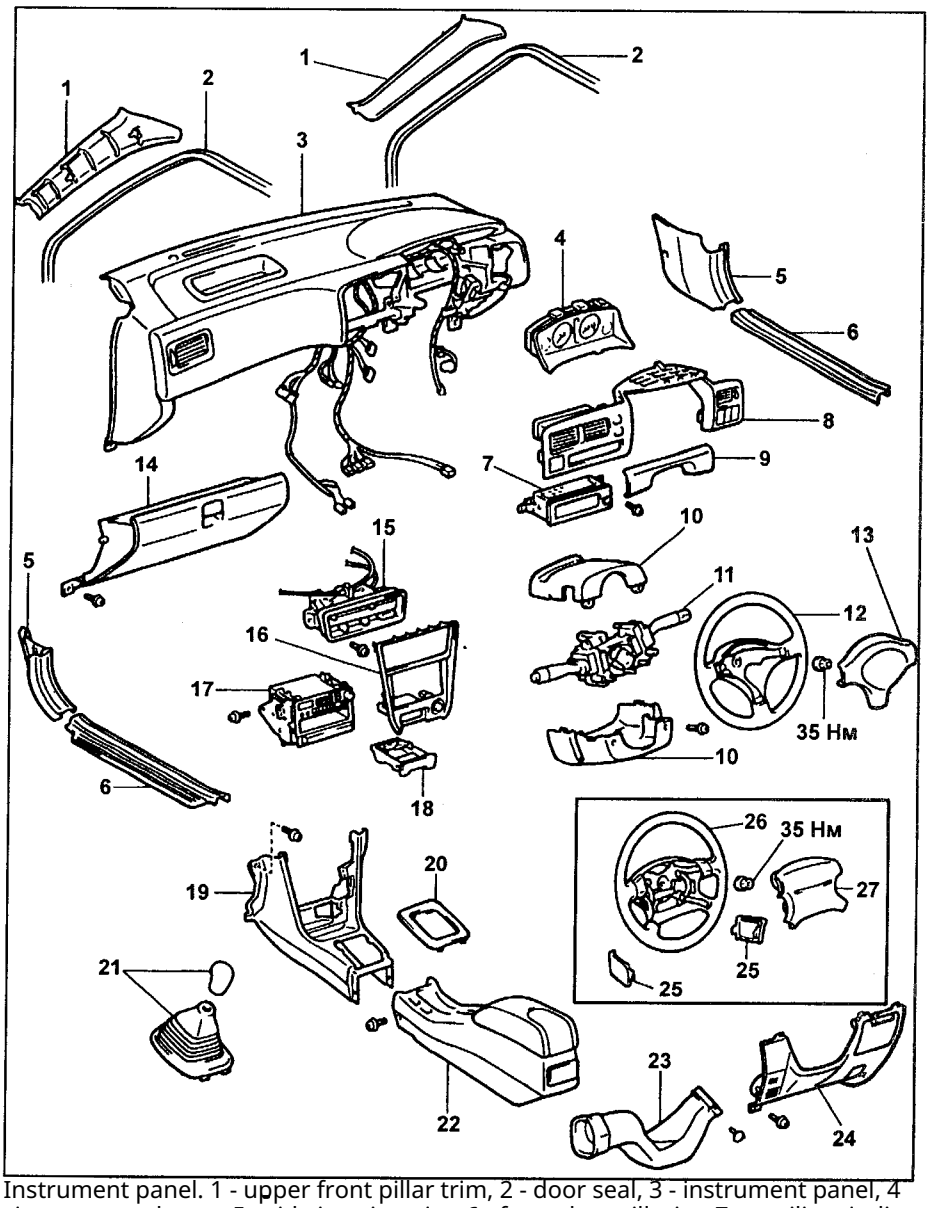

Instrument panel. 1 - upper front pillar trim, 2 - door seal, 3 - instrument panel, 4 - instrument cluster, 5 - side interior trim, 6 - front door sill trim, 7 - auxiliary indic ator unit, 8 - upper center console trim and upper instrument cluster trim, 9 - low er instrum - ent cluster trim, 10 - steering column cover, 11 - combination switc h, 12 - steering wheel (models without airbag), 13 - steering wheel pad (models wi thout airbag), 14 - glove box, 15 - air conditioning control panel (lever type), 16 - c enter console trim, 17 - radio, 18 - ashtray, 19, 22 - lower center console trim, 20 - shift lever hole trim (automatic transmission models), 21 - shift lever knob and bo ot (manual transmission models), 23 - air duct No. 2, 24 - lower trim panel on the driver side, 25 - steering wheel side cover (models with airbag), 26 - steering whee l (models with airbag), 27 - steering wheel pad (models with airbag). Removal and installation - I

instrument panel (type 1)

Note:

- when removing and installing the instrument panel, follow the relevant assembly with illustrations.
- the illustrations show the schematic symbols and the locations for installing fastening elements.

1. Using a screwdriver, remove the lower trim of the instrument cluster as shown in the illustration.

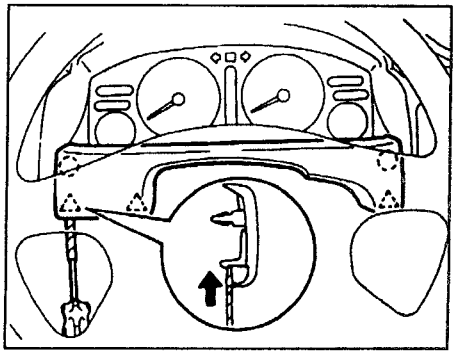

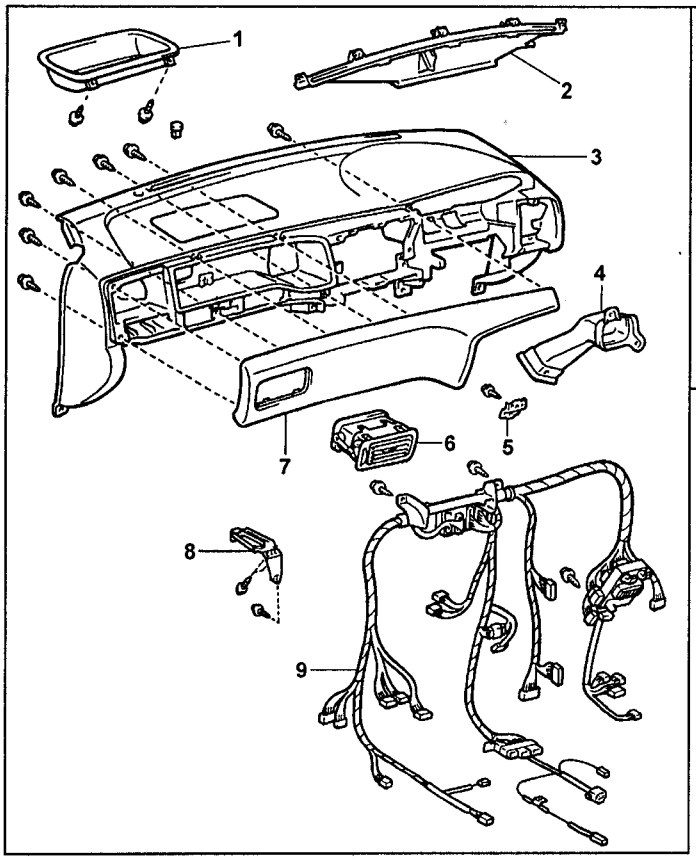

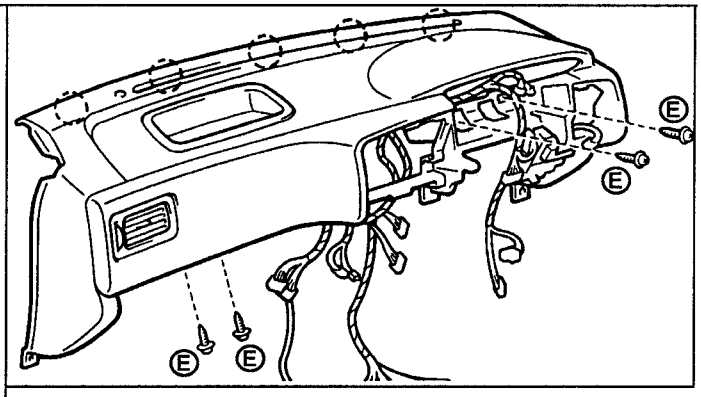

Removal and installation of the instrument panel (type 1).

Instrument panel (type 1).
1 - instrument panel trim,
2 - windshield heater deflector assembly,
3 - instrument panel,
4 - duct No. 1,
5 - bracket,
6 - side deflector,
7 - upper trim of the instrument panel on the passenger si de,
8 - bracket,
9 - wiring harness.

2. Remove the upper trim of the center console and the upper trim of the ins trument cluster. 8. Remove the side in terior trims.

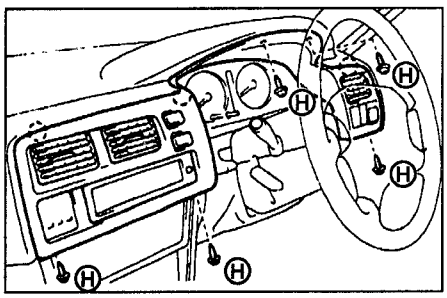

3. Remove the auxiliary indicator unit.

4. Remove the center console trim
console.

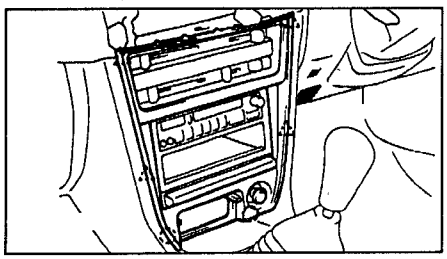

5. Remove the car radio.

6. Remove the instrument cluster.
7. Remove the front door sill trims.

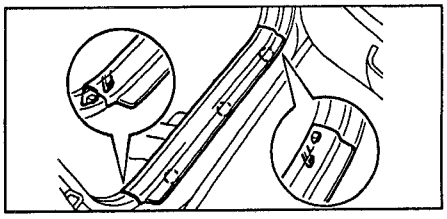

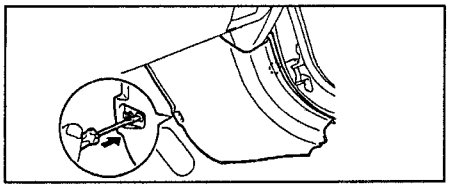

9. Remove the lower trim panel on the driver's s ide.

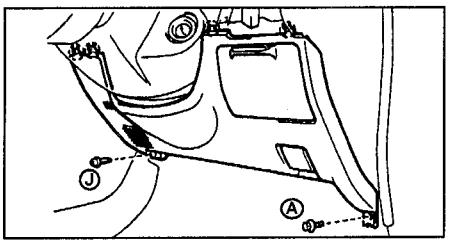

10. Remove air duct No. 2.
11. Remove the glove box.
12. (Models with a manual transmission) Re move the shift knob and the shift lever boo t. 13. (Models with an automatic transmissio n) Remove the trim around the shift lever o pening.
14. Remove the lower trim section - central console.

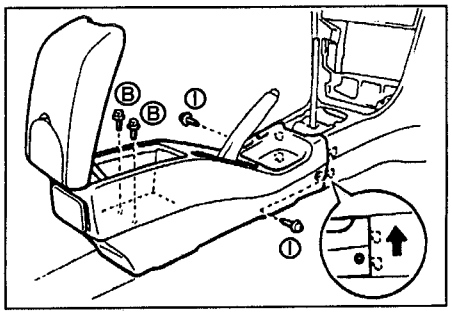

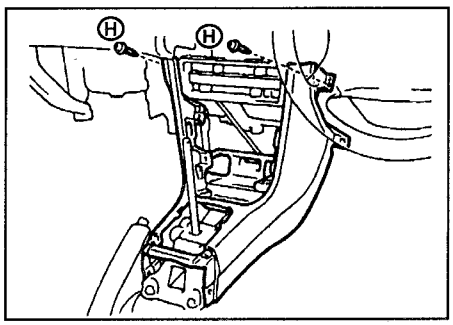

15. Remove the steering wheel.
16. Remove the steering column covers.
17. Remove the combination swi-
ключатель.
18. Remove the air-conditioning control panel (lever type).

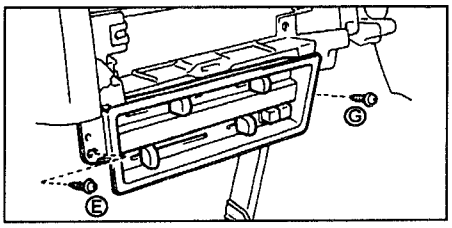

19. Remove the front seal
side doors.
20. Remove the upper trim of the front pillars.

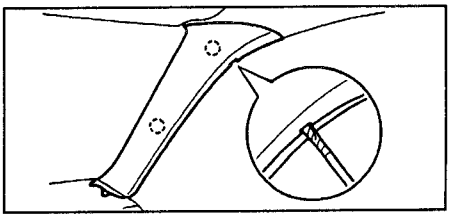

21. Remove the instrument panel.

Instrument panel (type 2)

The table lists the symbols, types, and sizes of the fasteners for the instrument panel.

	Type	Dimensions, mm
(A)	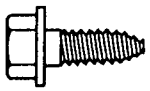	Ø = 6 L = 12
(B)	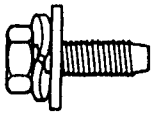	Ø = 6 L = 22
(C)	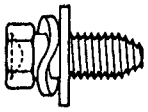	Ø = 8 L = 20
(D)	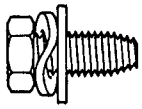	Ø = 8 L = 20
(E)		Ø = 5 L = 20
(F)	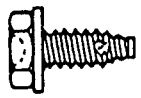	Ø = 6 L = 20
(G)	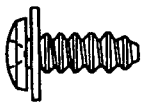	Ø = 7 L = 20
(H)		0 = 5.22 L = 14
(I)		0 = 5.22 L = 16
(J)		Ø = 5 L = 16
(K)		0 = 5.22 L = 14
(L)		0 = 5.22 L = 16

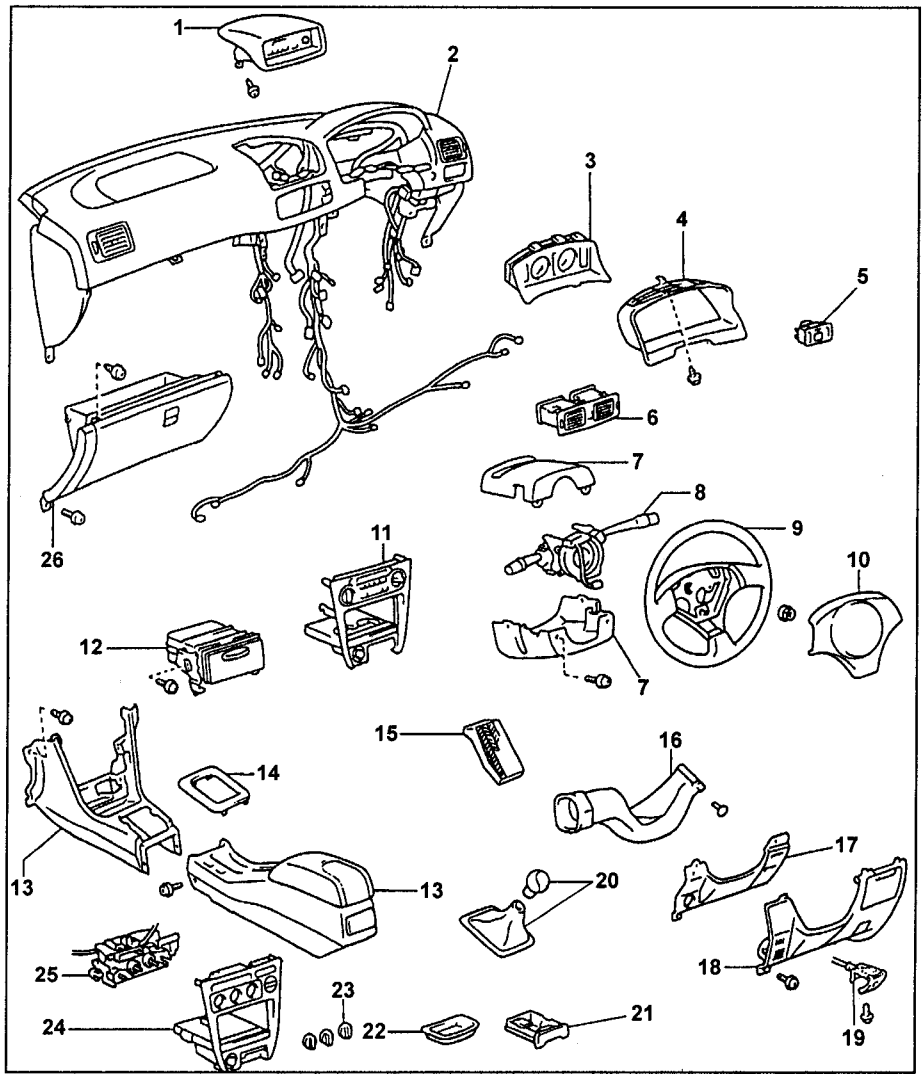

Instrument panel (type 2). 1 - auxiliary gauge cluster, 2 - instrument panel, 3 - instrument cluster, 4 - instrument cluster trim, mirror position control switch, 6 - center air vent, 7 - steering column cover, 8 - combination switch, 9 - steering wheel, 10 - steering wheel trim, 11 - upper trim of the center console (type 3), 12 - radio housing, 13 - lower trim of the center console, 14 - trim around the gear shift lever opening (vehicles with automatic transmission), 15 - footrest, 16 - air duct No. 2, 17 - inner trim panel on the driver side, 18 - outer trim panel on the driver side, 19 - hood latch release lever, 20 - knob and boot of the gear shift lever (vehicles with manual transmission), 21 - ashtray, 22 - console trim, 23 - switches, 24 - upper trim of the center console (type 4), 25 - air conditioning control panel (type 4), 26 - glove compartment.

Removal and installation instrument panel (type 1)

Note:

- When removing and installing the instrument panel, follow the assembly instructions relevant to the vehicle with illustrations.
- The illustrations show conventional designations and locations of the fastening elements.

1. Remove the front seat on the left side.

2. Remove the center air vent. 3. Remove the supplementary indicator unit as shown in the illustrations below.

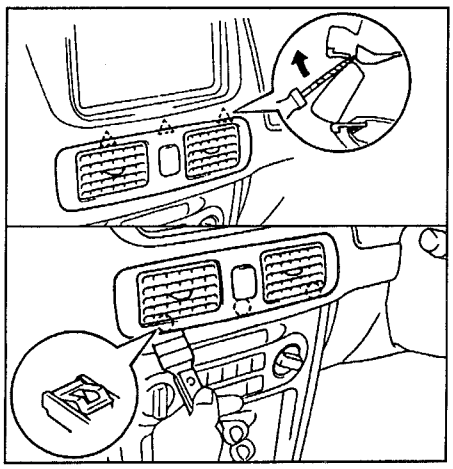

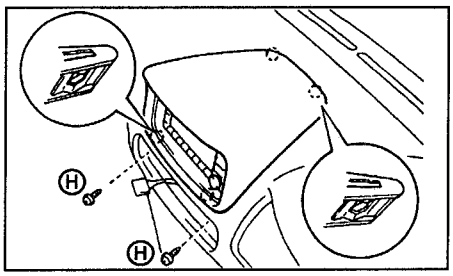

4. Remove the instrument cluster trim.

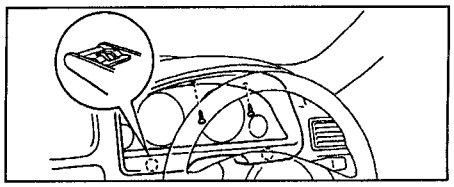

5. Remove the instrument cluster.
6. Remove the mirror position control switch.

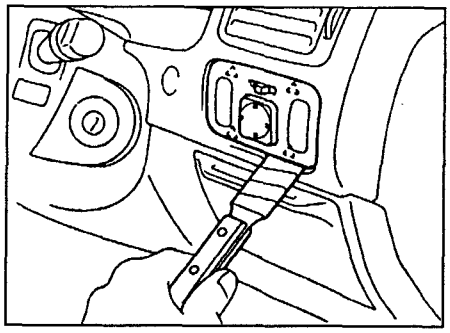

7. Remove the front side door sill trims.

8. Remove the interior side trim panels.
9. Remove the hood lock actuation lever.

10. Remove the outer trim panel on the driver's side.

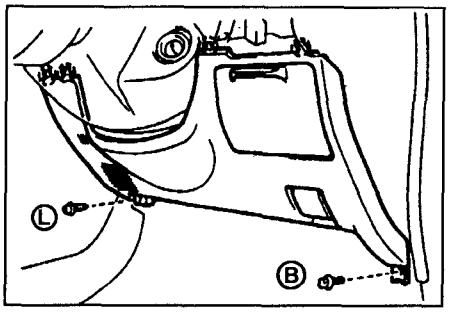

11. Remove the inner trim panel on the driver's side.
12. Remove air duct No. 2.
13. Remove the glove box.

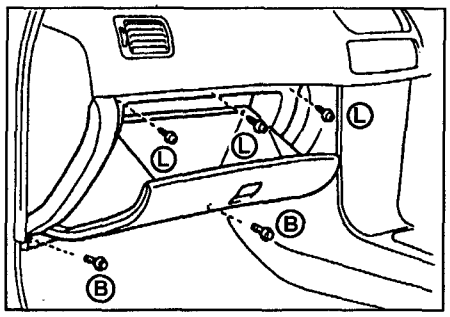

14. (Manual transmission models) Remove the gearshift lever knob. 15. (Manual transmission models) Remove the gearshift lever boot.
16. (Models with automatic transmission) Remove the trim of the gear shift lever opening.

17. Remove the lower trim of the center console, as shown in the illustration below.

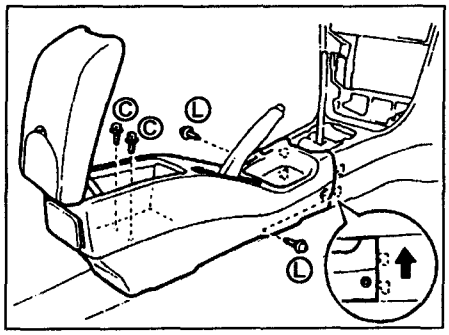

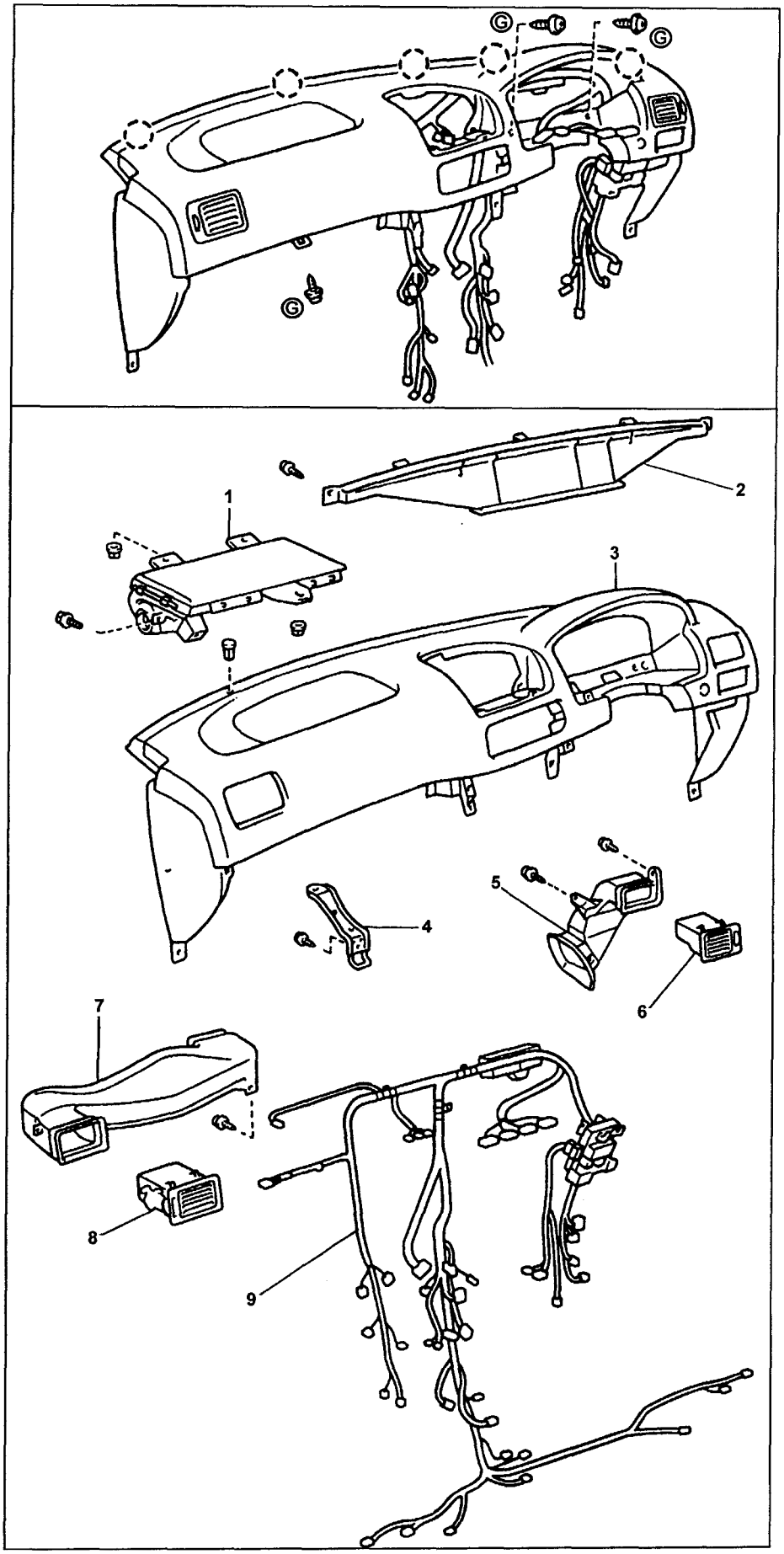

Instrument panel. 1 - passenger-side airbag, 2 - windshield heating deflector, 3 - instrument panel, 4 - bracket, 5 - air duct No. 1, 6 - side deflector, 7 - air duct No. 4, 8 - side deflector, 9 - wiring harness.

18. Remove the console trim.

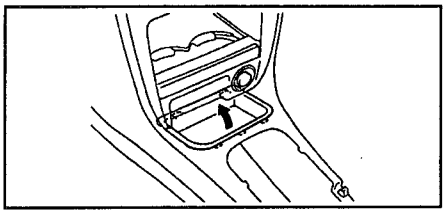

19. Remove the ashtray.
20. Remove the lower and upper trims of th e center console, as shown in the illustratio ns below.

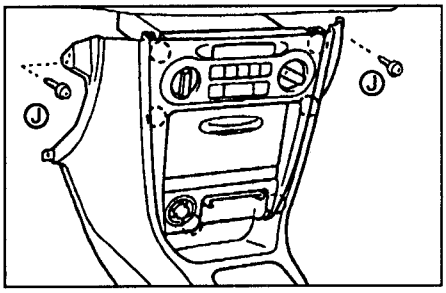

Control panel type No. 3.

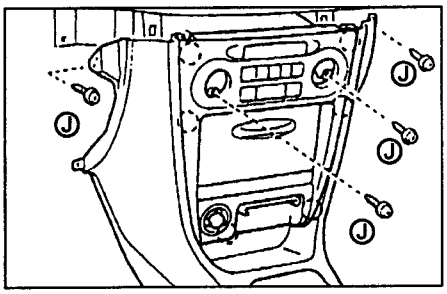

Control panel type No. 4.

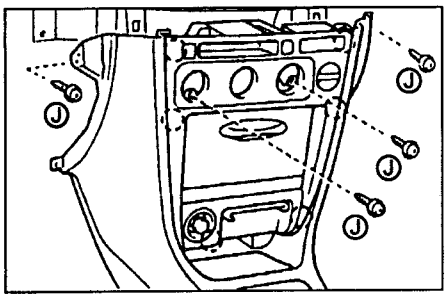

Control panel type No. 5.

21. Remove the radio housing.
22. Remove the steering wheel trim.
23. Remove the steering wheel.
24. Remove the steering column covers.
25. Remove the combination switc- ключатель.
26. Remove the front side door seal s.
27. Remove the upper trims of the front- pillars.
28. Remove the footrest.
29. Remove the instrument panel.

Interior trim

of the passenger compartment

Removal and installati on of the interior trim Note: Whe n removing and installing the interi or trim, follow the assembly illustra tion "Interior Trim".

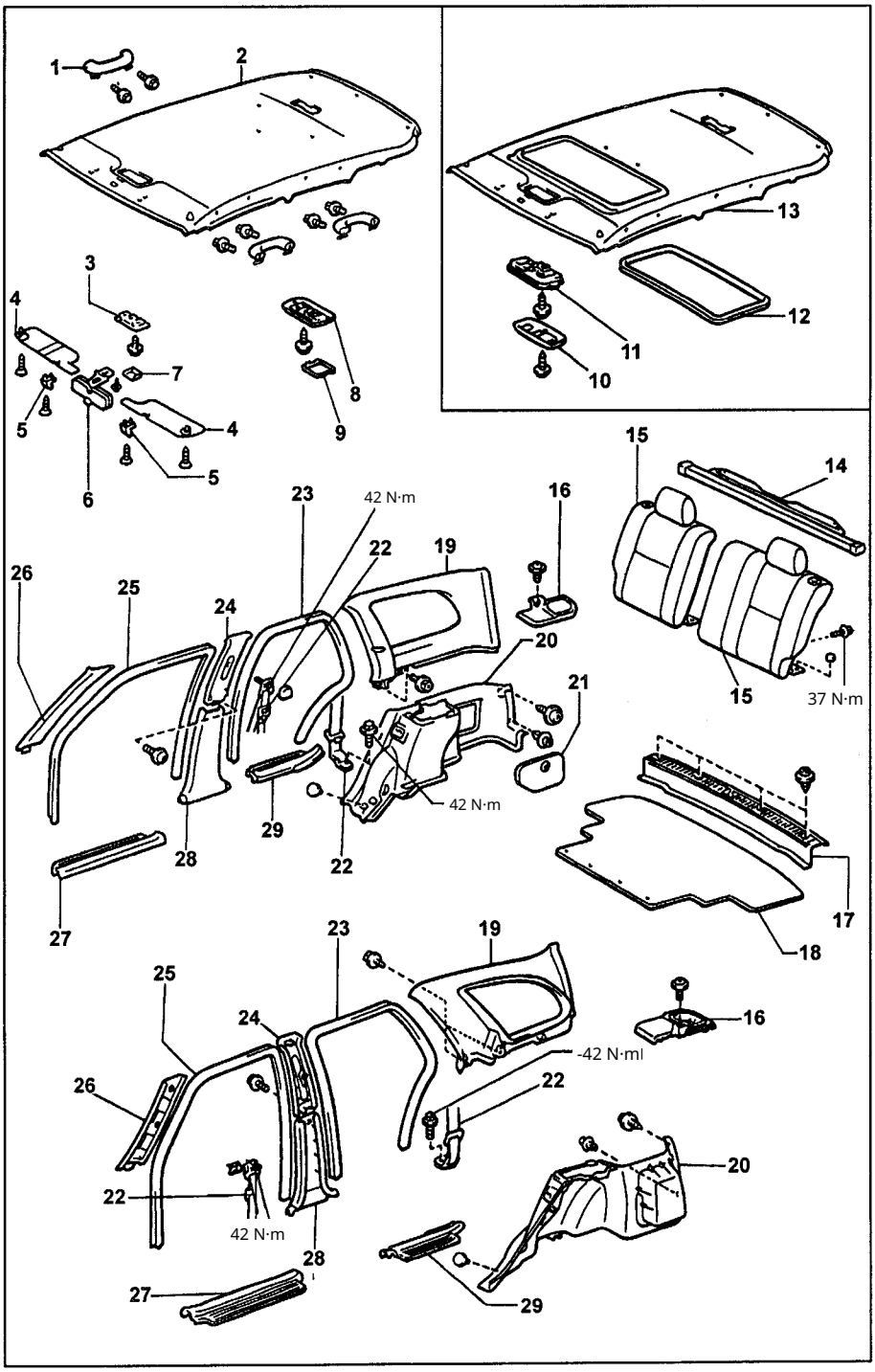

Interior trim of the cabin.1 handle, 2 roof trim (models without a sunroof), 3 front interior dome light (models without a sunroof), sun visor, 5 holders, 6 interior mirr 4 - or, 7 decorative cover of the interior mirror mounting, 8 center interior dome light, 9 cover of the center interior dome light, 10 cover of the sunroof control pan el and front interior dome light (models with a sunroof), 11 sunroof control panel and front interior dome light (models with a sunroof), 12 sunroof glass, 13 roof tri m (models with a sunroof), 14 luggage compartment curtain, 15 rear seat backres t, 16 speaker decorative cover, 17 rear door sill trim, 18 trunk floor mat, 19 upper side trim of the luggage compartment, 20 lower side trim of the luggage compart ment, 21 cover of the lower side trim of the luggage compartment, 22 seat belt, 2 3 rear side door seal, 24 upper trim of the center pillar, 25 front side door seal, 26 upper trim of the front pillar, 27 front side door sill trim, 28 lower trim of the cent er pillar, 29 rear side door sill.

Air Conditioning, Heating and Ventilation

Safety measures when working with refrigerant

When working with refrigerant, always observe safety procedures and security.

1. Do not work with refrigerant in an enclosed space or near open flames.

2. Always wear protective goggles. 3. Ensure that the refrigerant does not get into the eyes or on the skin. If exposure occurs: a) Do not rub the burned area. b) Rinse the burned area with plenty of cold water and apply petroleum jelly to the skin.
c) Do not attempt to treat yourself—immediately seek medical attention at a healthcare facility.

4. Before removing or inspecting electrical components, set the ignition lock to the "LOCK" position and disconnect the negative cable from the battery.

5. Do not heat refrigerant cylinders or burn them.

6. Do not drop cylinders or subject them to impacts.

7. Do not run the compressor without a sufficient amount of refrigerant. A lack of refrigerant leads to insufficient lubrication of the compressor, which may cause its failure.

8. Do not open the high-pressure valve on the gauge manifold while the compressor is running. Opening the high-pressure valve will change the direction of refrigerant flow, which will cause cylinder damage.

9. Do not allow the system to be overcharged. Excess refrigerant leads to insufficient cooling, increased fuel consumption, engine overheating, and so on.

Evacuation and charging of the system

Installing the gauge manifold

1. Attach the adapters to the charging hoses.
2. Remove the caps from the service valves on the air conditioning system lines.

3. Install the gauge manifold.
a) Close both valves of the gauge assembly.
b) Connect the hoses of the gauge assembly to the service valves.

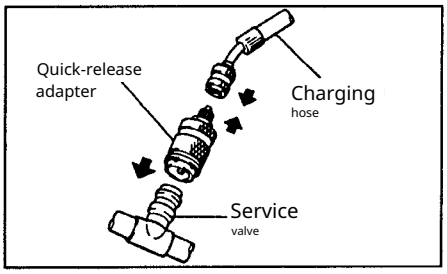

c) Open both valves of the pressure gauge assembly.
d) Press the plunger of the valve located on the side of the pressure gauge assembly and release the refrigerant from the air conditioning system, how as shown in the illustration.

Note: the illustration below shows the diagram for installing the gauge assembly on vehicles with different engines and the locations for connecting the gauge assembly hoses to the service valves.

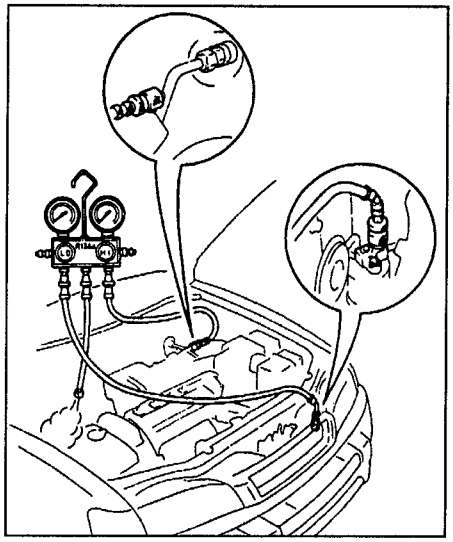

System evacuation

1. Evacuate the system.
a) Install the adapter on the vacuum pump.

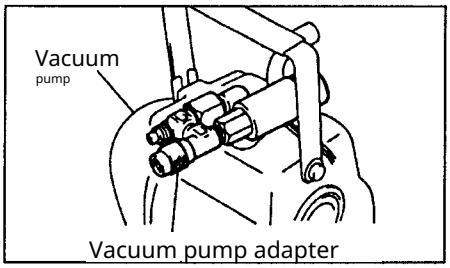

b) Connect central hose from the pressure gauge assembly to the vacuum pump adapter.
c) Open both valves of the pressure gauge assembly and turn on the vacuum pump.

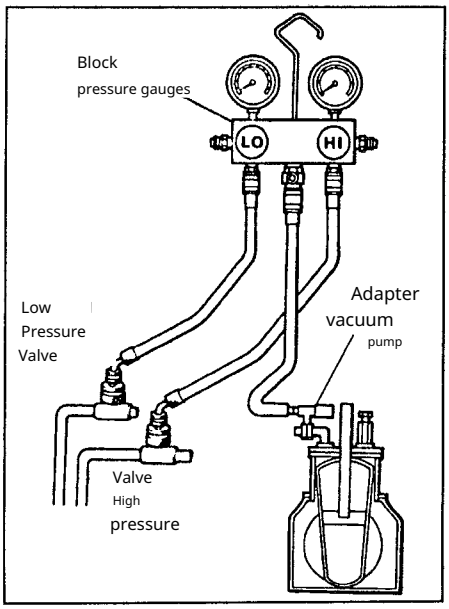

g) Not less than 10 minutes later, pro-
Believe that the low-pressure gauge shows 100 kPa or more.

Note: if the pressure is low, close both valves of the pressure gauge block and turn off the vacuum pump. Check the system for leaks and repair as necessary.

d) Close both valves of the pressure gauge block and switch off the vacuum pump.

e) Leave the system in that condition for at least 5 minutes, check that the instrument readings do not are changed.

Installation of the charging cylinder

1. Install the charging cylinder.
Note: when working with the charging cylinder always follow the requirements described in its manual.
(a) Fill the charging cylinder with the necessary amount of refrigerant.
Required amount of refrigerant ..... 650 ± 50 2
(b) Connect central hose to the charging cylinder.
Warning: do not open the valves on the gauge block!
(c) Open the valve on the charging cylinder.
(d) Press the core of the valve located on the side of the gauge block and release the air from the central hose.

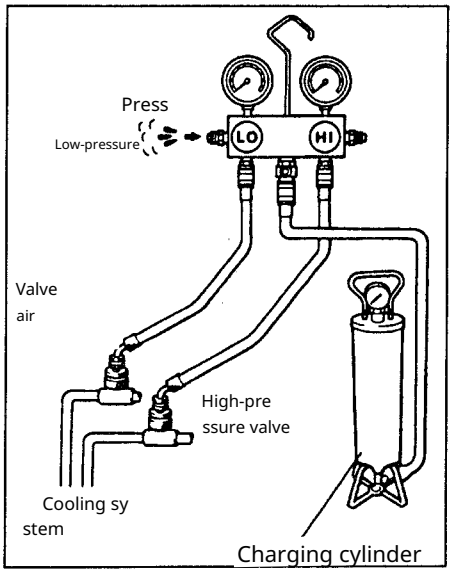

Leak test system

1. Check the system for leaks. a) Open the high-pressure valve on the gauge manifold and charge the system with refrigerant.

b) When the pressure on the low-pressure side reaches 98 kPa, close the high-pressure valve. c) Use a leak detector to check the system for leaks.

d) If leaks are found, after repair repeat the evacuation (vacuum) procedure.

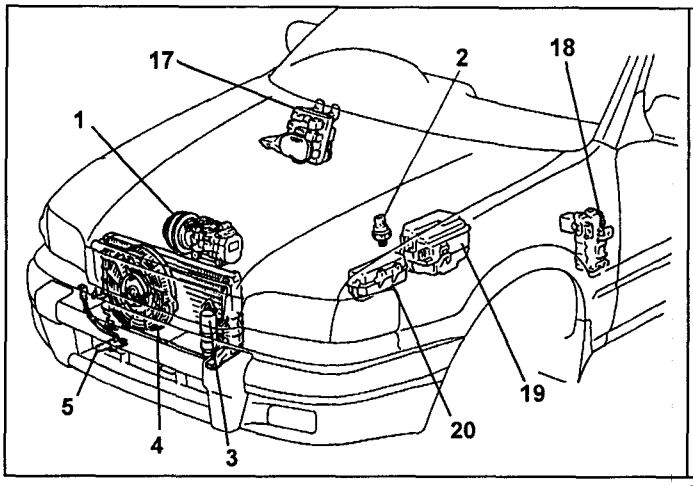

Location of components on the vehicle.

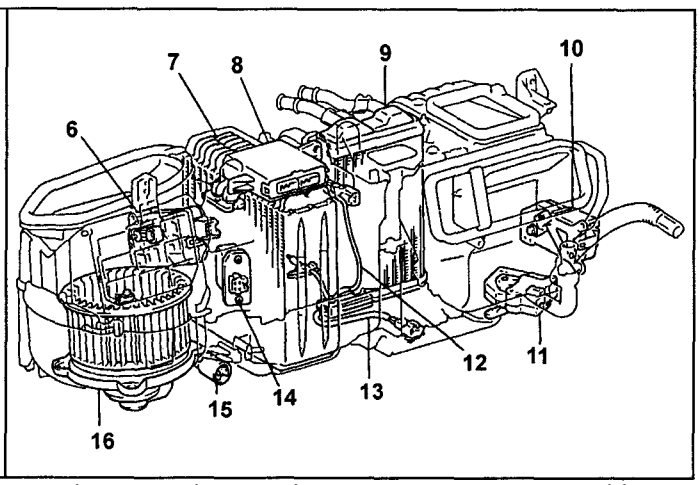

Front heater and air conditioning system unit assembly.

1 - compressor, 2 - pressure switch, 3 - receiver (accumulator), 4 - condenser fan, 5 - thermistor (ambient temperature sensor), 6 - air intake flap actuator, 7 - evaporator assembly, 8 - air conditioner amplifier, 9 - heater core, 10 - airflow direction flap actuator (push-button type panel), 11 - air mix flap actuator (push-button type panel), 12 - air temperature sensor after the evaporator, 13 - coolant temperature sensor (push-button type panel), 14 - power transistor (push-button type panel) or blower resistor (lever-type panel), 15 - EX-HI relay (push-button type panel), 16 - heater blower assembly with motor, 17 - instrument panel fuse/relay block, 18 - relay block, 19 - relay block, 20 - engine compartment fuse/relay block.

Refrigerant charging

1. Recharge the system with refrigerant. After checking for leaks, bring the refrigerant charge up to the specified level. Caution: before

- never charge the system through the high-pressure side with the engine running.
- do not open the low-pressure valve when the system is being charged with liquid refrigerant.

a) Fully open the high-pressure valve on the manifold gauge set. b) Fully charge the system, then close the high-pressure valve. Note: a fully charged system is indicated by the absence of bubbles in the service sight glass.

Removal of the manifold gauge set 1. Disconnect the manifold gauge set from the service valves.

Note: first close the manifold gauge set valves!

2. Install caps on the cooling system service valves.

Quantity check

refrigerant

1. Inspection mode.
   a) Set the idle speed of the engine—yes 1000 rpm.
   6) Fully open the doors.
2. Air conditioner mode.
   a) Set the heater fan to high speed.
   b) Turn on the air conditioner.
   c) Move the air intake flap to the "RECIRC" position.
   g) Set to maximum mode cooling.
3. Check the refrigerant quantity by inspecting for bubbles in the service container in the receiver window.
   a) If plugs are visible in the service window—

If you notice bubbles (lack of refrigerant), then check the system for leaks and recharge the system to the proper level.

Note: refer to the subsection "Charging" for the refrigerant quantity. systems

b) If bubbles are not visible (the refrigerant quantity is normal, or the system is overcharged, or the refrigerant is absent), then see the corrective measures in subitems "c" and "d".

c) If there is no temperature difference between the compressor's inlet and outlet openings (the refrigerant is absent or the refrigerant quantity is minimal), then check for refrigerant leaks, and then charge the system to the correct level.

g) If there is a large temperature difference between the compressor's inlet and outlet openings (the refrigerant charge is normal or the system is overcharged), the method of elimination — see subpoints "d" and "e".

d) If the refrigerant in the service port becomes clear immediately after the air conditioner is turned on (system overcharge), evacuate the system and recharge it to the specified level. e) If, after turning on the air conditioner, the refrigerant foams and then becomes clear, the refrigerant charge is within the normal range. Cooling lines Inspection on the vehicle

1. Check the tightness of the pipeline connections.
2. Using a leak detector, check the system for leaks. Replacement of pipeline components

1. Remove the refrigerant from the system (see the subsection "Installing the manifold gauge set and discharging the system").
2. Replace the defective components.

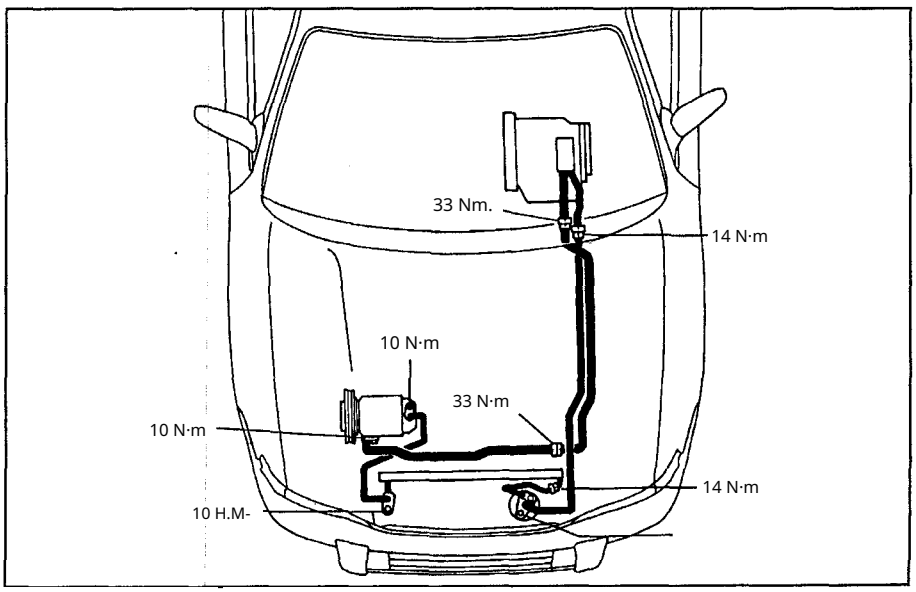

Tightening torques for threaded connections of the air conditioning system.

Warning: to avoid contamination of the system, immediately install plugs on the open ends of the pipes.

4. Evacuate and charge the system with refrigerant (see the subsections "Evacuating the system" and "Charging the system").

plugs on the open ends of the tubes.

3. Tighten the connection

s. Warning: perform the tightening of th e connections strictly in accordance with the torque values shown in the figure "Ti ghtening torques for threaded connecti ons of the air conditioning system".

5. Check the system for leaks (see the subsection "Checking the system for le aks"). 6. Check the op eration of the air conditioner.

with air conditioner

Note: These vehicles are equipped with five types of air conditioner control panels. Wh en removing, installing, disassembling, and assembling the control panel, follow the c orresponding illustrations.

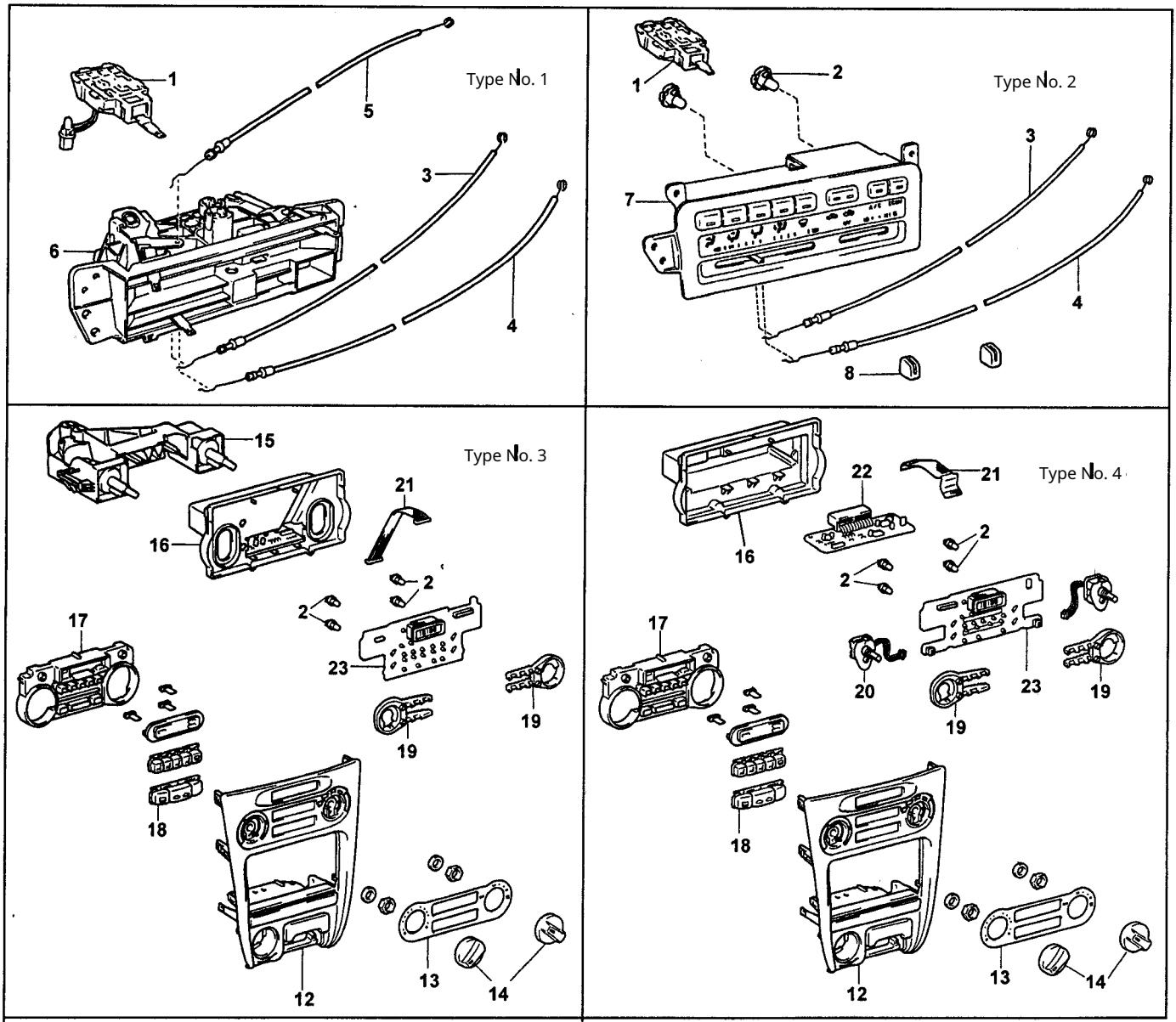

Air conditioner control panel. 1 - heater fan switch

2 - illumination bulb for the cont rol panel, 3 - control cable for the water valve, 4 control cable f or the air-mixing damper, 5 control cable for the airflow dir ection damper, 6 - air conditioner control panel (type No. 1), 7 - control panel (type No. 2), levers, 9 control cable for the air inta ke damper, 10 - air conditioner control panel (type No. 5), 11 - c lock and air conditioner switch, 12 - upper trim of the cente r console, 13 - decorative trim, 14 - switch, 15 - heater control h ousing, 16 - rear cover, 17 - front cover, 18 - buttons, 19 - light g uide, 20 - selector switch, 21 - wiring harness, 22 - electronic air conditioner control unit, 23 - circuit board.

Removing the air conditionin g control panel (type No. 1)

1. Set the air conditioning control panel levers to the specified positions:

a) The vent flap control lever in the B air flow direction position "FACE".

b) Lever for controlling the air intake flap to the "RECIRC" position. c) Lever for controlling the airflow mixing flap to th e "COOL" position.

2. Remove the front door sill trim on the d river's side.
3. Remove the front side trim of the inter ior on the driver's side.
4. Remove the lower trim pa- panel on the driver's side.
5. Remove air duct No. 2.
6. Remove the upper trim of the center co nsole.
7. Remove the car radio.
8. Remove the front door sill trim on the p assenger side.
9. Remove the front side interior trim on t he passenger side. 10. Remove th e glove box.
11. Disconnect the control cable for the water (mix ing) valve from the clamp, and remove the cable fr om the lever.
12. Disconnect the control cable for the air intake flap from the clamp, and remove th e cable from the lever.
13. Disconnect the control cable for the air direction flap from the clamp, and remov e the cable from the lever.
14. Disconnect the control cable for the air fl ow mixing flap from the clamp, and remove t he cable from the lever. 15. Remove the levers.
16. Remove the switch located at the lower rig ht corner of the air conditioner control panel.

17. Remove the air conditioner control panel.

18. Disconnect the cable.

Air Conditioner Contro l Panel Installation Note: The air con ditioner control panel is installed in th e reverse order of removal.

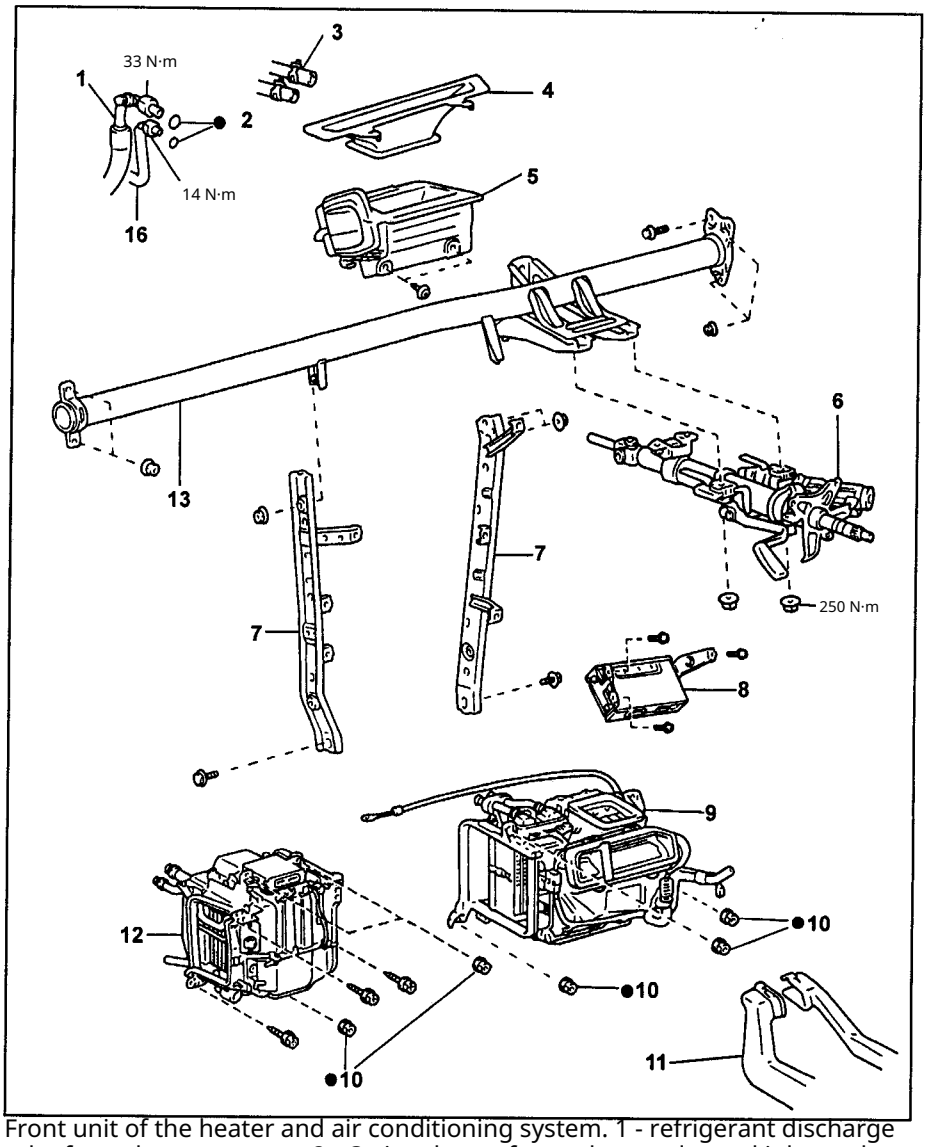

Front unit of the heater and air conditioning system. 1 - refrigerant discharge tube from the evaporator, 2 - O-ring, hoses for coolant outlet and inlet to the 3 - heater radiator, 4 - connecting duct of the defroster for the windscreen he ater, 5 - center air duct, 6 - steering column, 7 - central mounting bracket for t he instrument panel, 8 - amplifier, 9 - front heater unit assembly, 10 - nuts, 11 - air duct for rear seat heating, 12 - front air conditioning unit assembly, 13 - in strument panel amplifier. 2. Remove the instrument panel (see 12. Remove th e instrument panel amplifier in the "Body" chapter, section "Instrument Panel").

Front unit of the system heater and air conditioning system air

Removal of the front unit

Note: when removing the front unit of the heater and air conditioning system refer to the assembly illustrati on "Front unit of the heater and air co nditioning system".

1. Set the air conditioning control panel levers to th e specified positions:

a) The vent flap control lever in the B air flow direction position "FACE".

b) Move the air intake flap control lever t o the "RECIRC" position. c) Move the

air mix flap control lever to the "COOL" position.

3. Discharge the air conditioning syste m (see the subsection "Installation of th e gauge set and system discharge").

4. Unscrew the two mounting nuts and remove the refrigerant supply and return lines from the evaporator.

5. Drain the coolant from the engine cooling system.
6. Remove the clamps and circular seals, disconnect the coolant inlet and outlet h oses from the heater.
7. Remove the instrument panel reinforcement yr.
8. Remove the amplifier.
9. Remove the heater deflector air-duct connection for the windshield and the c entral air duct. 10. Remove the steer ing column. 11. Remove the ce ntral mounting bracket for the instrum ent panel.

13. Unscrew the three mounting screw s and three nuts and remove the front assembly of the air conditioning syste m.
14. Unscrew the three mounting nuts an d remove the front heater unit assembly

Installation of the front unit

Note:

- The installation of the front unit is carr ied out in the reverse order of removal. Removal.
- When installing the front unit of the he ater and air-conditioning system, follow t he assembly diagram "Front unit of the h eater and air-conditioning system".
- When installing the instrument panel, see the "Body" chapter, "Instrument pa nel" section.

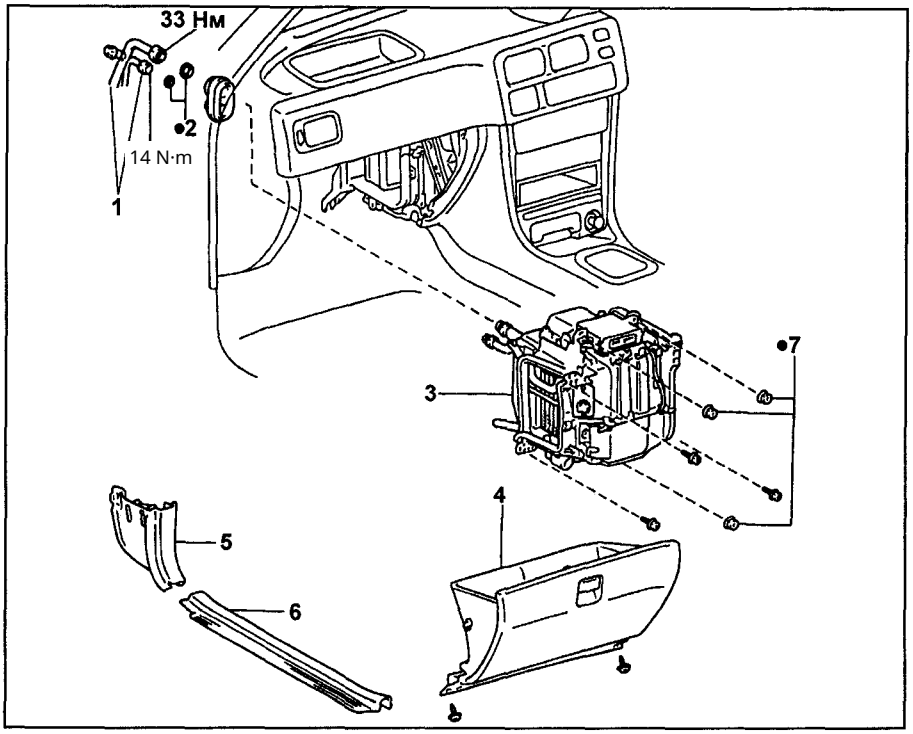

Removal and installation of the front unit of the air-conditioning system. 1 - refrigeran t supply and return pipes from the evaporator, 2 - O-ring seal, 3 - front unit of the air-c onditioning system assembly, 4 - glove box, 5 - side interior trim, 6 - front door sill trim .

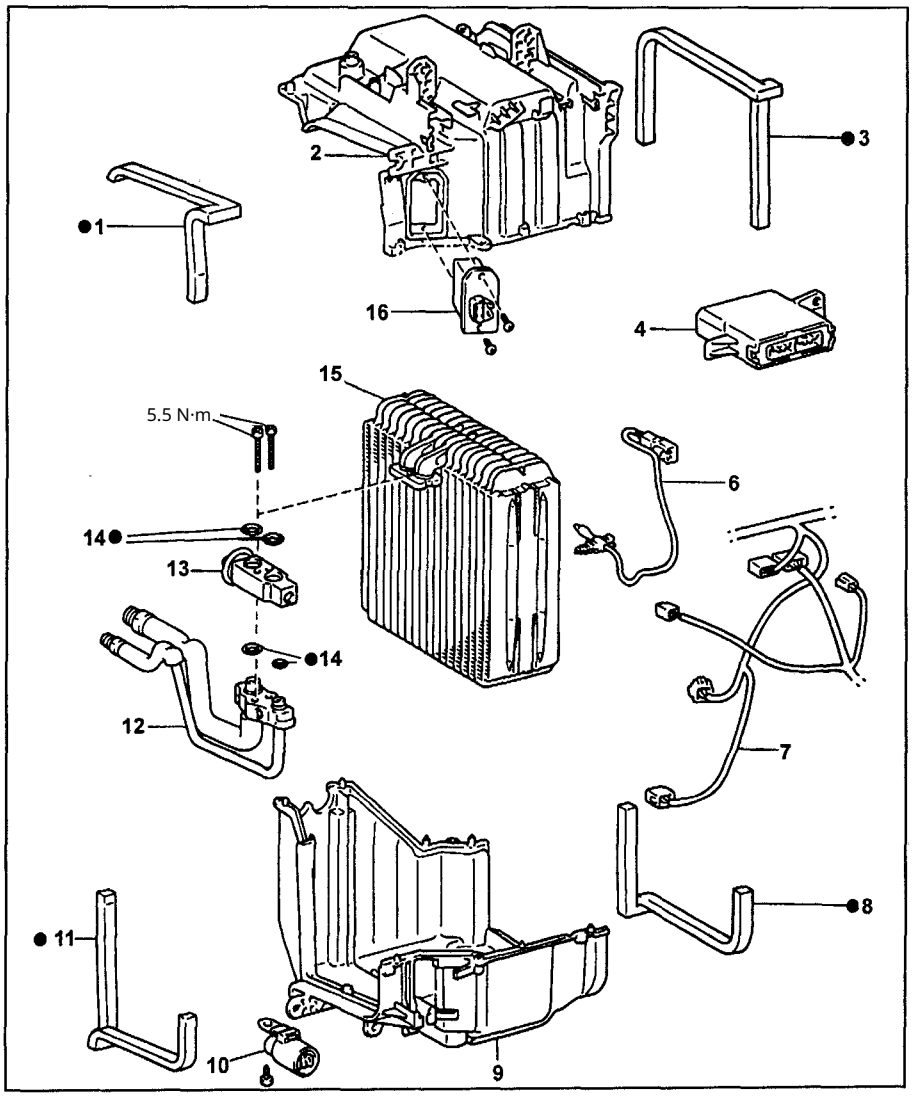

Evaporator

Evaporator removal

Note: When removing the evaporator of t he air conditioning system, follow the ass embly illustration "Removal and installati on of the front air conditioning unit".

1. Discharge the air conditioning system (see the subsection "Installing the gauge s et and discharging the system").

2. Unscrew the two mounting nuts and re move the refrigerant inlet and outlet pipes from the evaporator.
3. Remove the front door sill trim.

4. Remove the side interior trim.
5. Remove the glove box.
6. Unscrew the three screws and three mo unting nuts and remove the front assembl y of the air conditioning system.

Disassembly and assembly o

f the evaporator

Note:

- When disassembling and assemblin g the evaporator of the air conditioni ng system, follow the assembly illustr ation "Disassembly and assembly of t he front air conditioning unit". Inst allation of the evaporator Not

e:

- When installing the evaporator of th e air conditioning system, follow the ass embly illustration "Removal and installat ion of the front air conditioning unit".

- The evaporator is installed in the reverse order of removal.

Removal.

Disassembly and assembly of the front air co nditioning unit.

1 - seal,
2 - upper cover of the front air conditioning uhit,

3 - seal,
4 - air conditioner amplifier (on models with control panel type No. 1 the air cond itioner amplifier has one connector),

6 - Air temperature sensor behind the evapor ator,
7 - wiring harness,
8 - seal,
9 - lower cover of the front air conditioning unit,

10 - relay EX-NI (push-button type pa- neli),
11 - seal,
12 - refrigerant supply and return lines to a nd from the evaporator,
13 - expansion valve,
14 - O-ring,
15 - evaporator,
16 - power transistor (push-button- new type of panel) or the fan resistor (lever-type panel).

Heater

Removal and installation of the front heater unit

Note:
- Drain the fluid from the engine cooling system.
- When removing and installing the front heater unit, follow the assembly illustration "Front Heater Unit and Air Conditioning System".

Disassembly of the front heater unit
of the heater system

Note: When disassembling the front heater unit, follow the assembly illustration " Disassembly and Assembly of the Front Heater Unit".

1. Remove the ventilation tube. 2. Remove the airflow direction damper actuator (button-type control panel).

3. Remove the upper cover of the front heater unit as shown in the illustration.

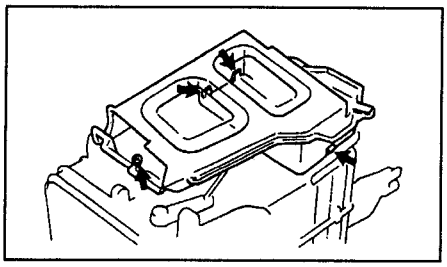

4. Remove the air-mix flow damper actuator (button-type control panel).

5. Remove the side cover of the front heater unit as shown in the illustration.

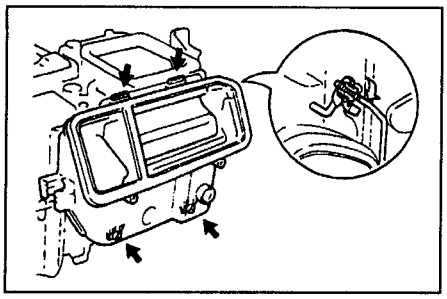

6. Remove the coolant temperature sensor (push-button type panel).

7. Remove the two retainers for the heater coolant inlet and outlet pipes.

8. Withdraw the heater core from the housing of the front heater unit.

Assembly of the front unit
of the heater system

Note:
- when assembling the front unit of the heater system, follow the assembly illustration "Disassembly and assembly of the front unit of the heater system".
- the assembly of the front unit of the heater system is carried out in the reverse order of disassembly.

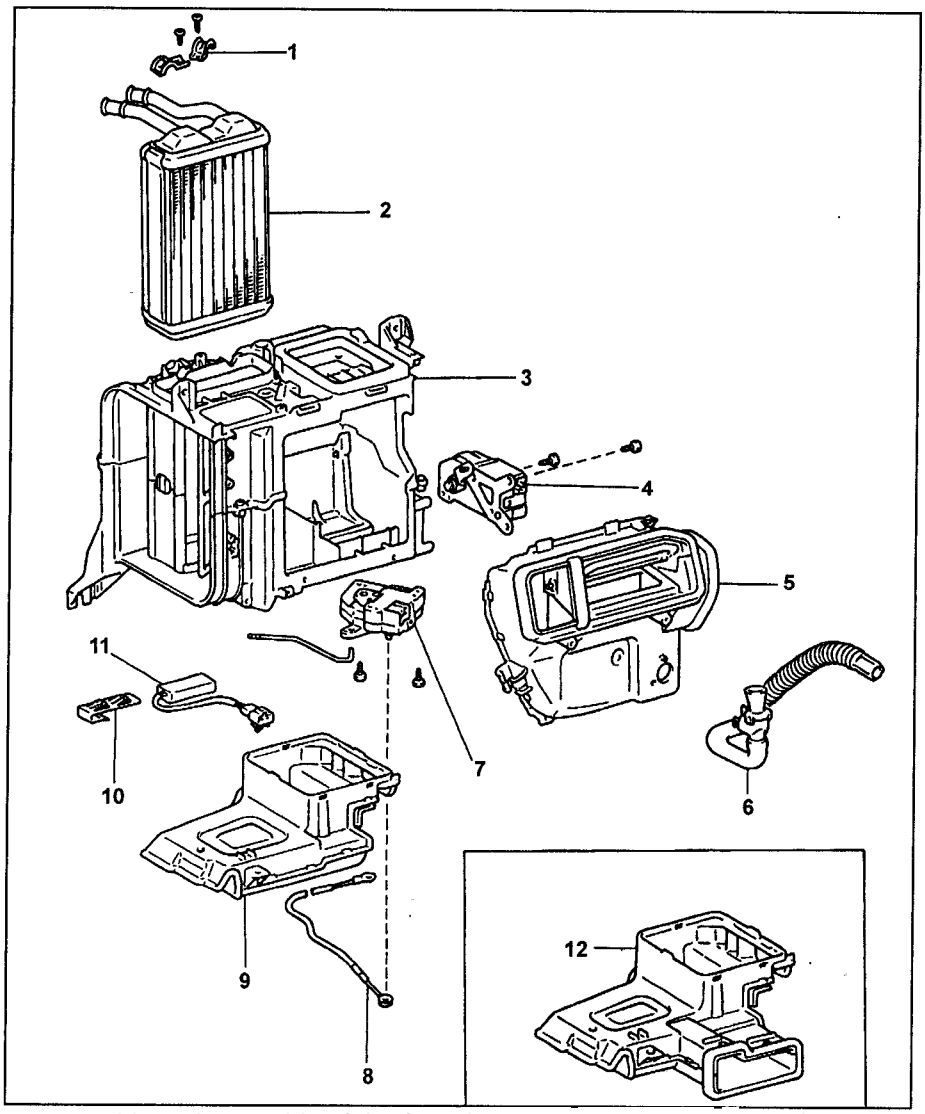

Disassembly and assembly of the front heater unit. 1 - retainers, 2 - heater core, 3 - front heater unit, 4 - air direction flap servo actuator (button-type control panel), 5 - side cover of the front heater unit, 6 - ventilation tube, 7 - air mixing flap servo actuator (button-type control panel), 8 - wire, 9, 12 - upper cover of the front heater unit, 10 - clamp, 11 - engine coolant temperature sensor (button-type control panel). Compressor

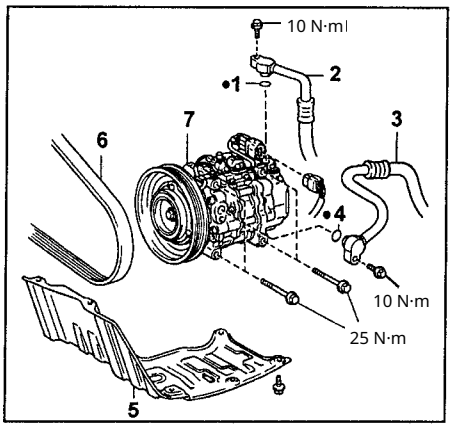

Compressor. 1 - O-ring seal, 2 - refrigerant discharge tube from the compressor, 3 - refrigerant suction tube to the compressor, 4 - O-ring seal, 5 - engine protection cover, 6 - compressor drive belt.

Compressor removal

1. Start the engine and set it to idle mode, then turn on the air conditioner and let it run for 10 minutes.

2. Turn off the engine.
3. Disconnect the negative terminal from the battery. 4. Discharge the air conditioning system (see subsection "Installation of the gauge set and system discharge"). 5. Remove the engine splash shield. 6. Remove the drive belt.

7. Unscrew the two mounting bolts and disconnect the refrigerant supply and return lines to the compressor.

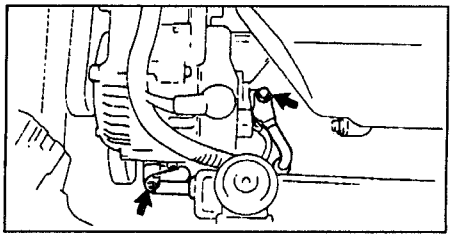

8. Disconnect the connector, unscrew the four mounting bolts, and remove the compressor assembly with the electromagnetic clutch.

Compressor Installation

Note: Installation of the compressor is carried out in the reverse order removal.

Heater fan

Removing the heater fan

Note: When removing the fan, follow the assembly illustration "Removal and installation of the heater fan".

1. Discharge the air conditioning system (see the subsection "Installing the gauge set and discharging the system").

2. Disconnect the refrigerant supply and return lines to the compressor. 3. Remove the front door sill trim.

4. Remove the side interior trim.
5. Remove the glove box.
6. Remove the front air conditioning unit assembly together with the heater fan housing.
7. Remove the heater fan assembly with the electric motor. Installation of the heater fan

Note:

- When installing the fan, follow the assembly illustration "Removal and installation of the heater fan".
- Installation of the heater fan is carried out in the reverse order of removal.

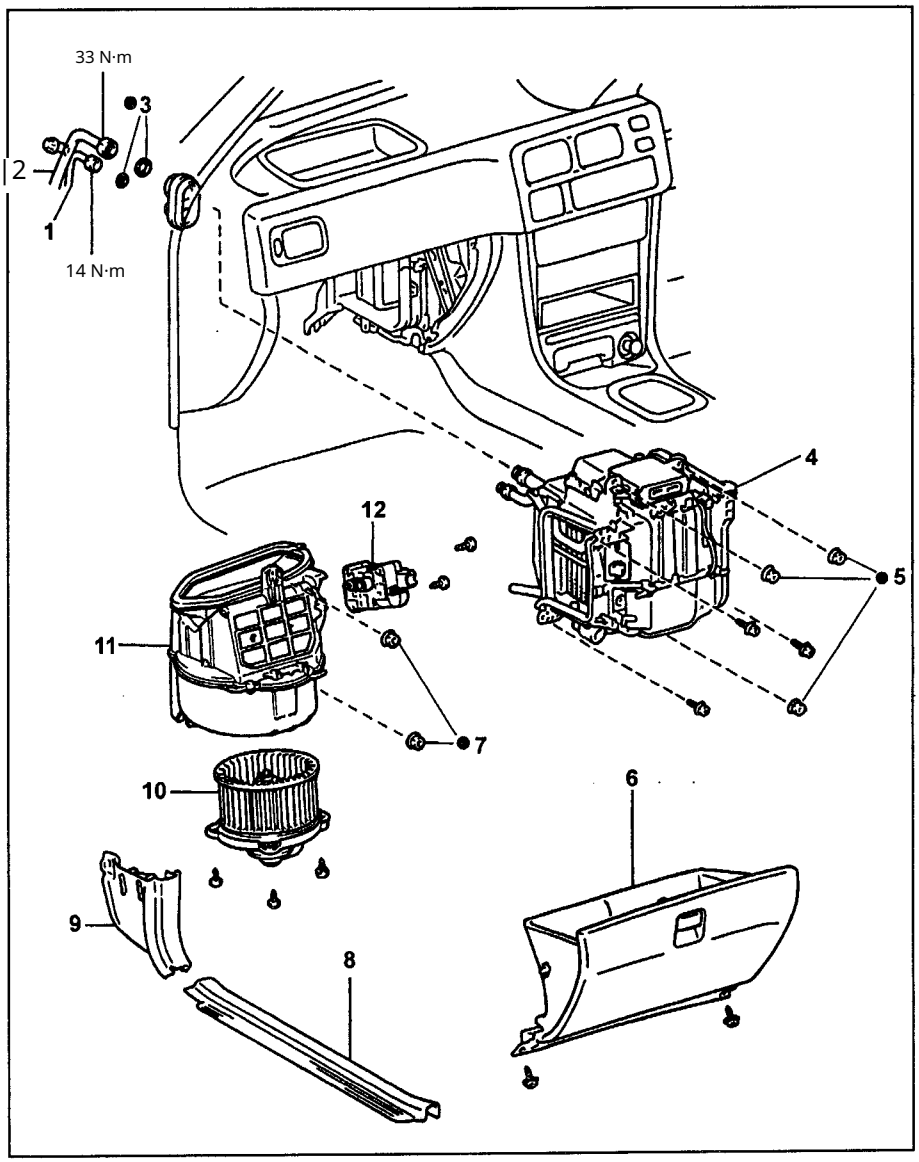

Removal and installation of the heater fan. 1 - refrigerant supply tube to the evaporator, 2 - refrigerant return tube from the evaporator, 3 - O-ring seal, 4 - front air conditioning unit assembly, 5, 7 - nuts, 6 - glove compartment, 8 - front door sill trim, 9 - side interior trim, 10 - heater fan assembly with electric motor, 11 - heater fan housing, 12 - air intake flap servo.

Servomotors

Checking the servomotors 1. Checking the air intake flap servomotor.

a) Connect the battery "+" to terminal "1" and "-" to terminal "2", check that the flap moves to the "RECIRC" position. b) Connect the battery "+" to terminal "1" and "-" to terminal "3", check that the flap moves to the "FRESH" position.

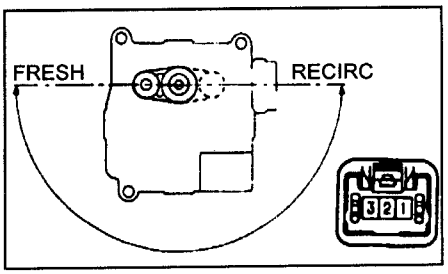

2. Inspection of the flap servo mixing of the flows.

a) Connect the "+" terminal of the battery to terminal "1" and the "-" terminal to terminal "2", and check that the lever moves smoothly from "COOL" to the "HOT" position.

6) Connect the battery "+" to terminal "2", pi a to ter-

With lever "1", check that the lever moves smoothly from "HOT" to the "COOL" position as shown in the illustration below.

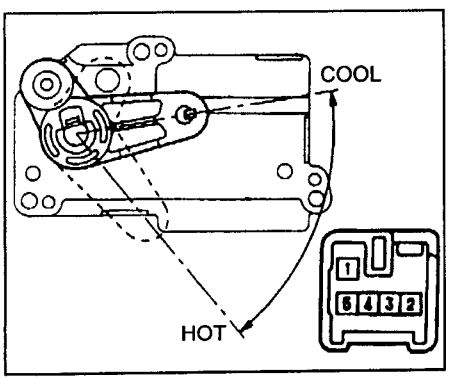

c) Check that when moving the flap from the "COOL" position to the "HOT" position, the resistance between terminals "3" and "4" changes as shown in the illustration.

Resistance:

to MAX NOTE. ..... 0.9 - 1.5 kΩ
6 MAX COLD. ..... 3.8 - 5.8 kΩ

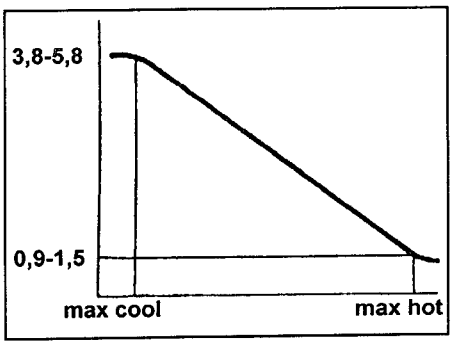

3. Inspection of the air direction damper servomotor. a) Connect the battery "+" to terminal "2" and the "-" to terminal "1" of the connector.

6) While connecting each connector terminal to the negative battery terminal,

check that the lever moves to the positio n indicated in the table.

OUTPUT	Position
4	FACE (face)
5	BI - LEVEL (face and feet)
6	FOOT (feet)
7	FOOT/DEF (feet / windshield)
8	DEF (windshield defrost)

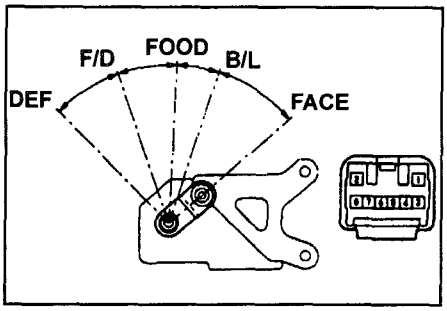

Inspection of Sensors, Relays and Switches

Sensor Check

Cabin Temperature

Check that the sensor resistance versus temperature relationship matches the chart shown.

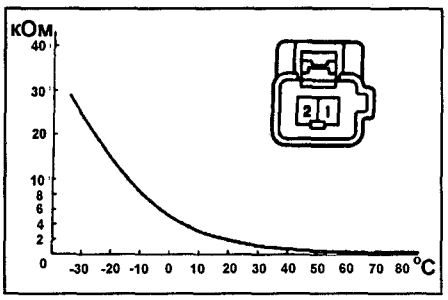

Resistance
at 25°C.... ..... 1.6 - 1.8 com

Checking the ambient air temper ature sensor

Check the conformity of the characteristic resistance of the sensor to temperature (see figure).

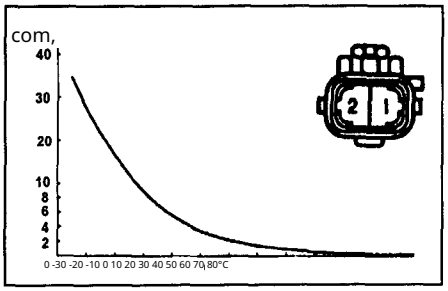

Resistance
at 25°C. ..... 1.6 - 1.8 com

Temperature sensor check evaporator circuits

Check the conformity of the characteristic Temperature sensor resistance as shown in the figure. Resistance:

at 0°C ..... 4.6–5.1 kΩ
at 15°C.. ..... 2.2–2.6 kΩ

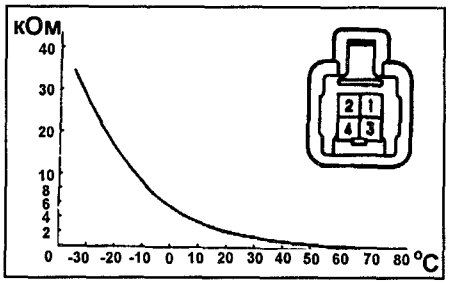

Checking the coolant temperatur e sensor In the heater radiator Mea sure the resistance betwee n terminals "1" and "2" of the sensor connector at different coolant temp eratures.

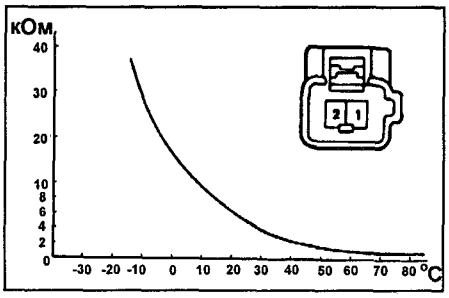

Resistance:
at 0°C. ..... 50 kΩ
at 40°C. ..... 2.5 - 2.8 kΩ
at 100°C. ..... 0.2 kΩ

Checking the coolant temperature switch

Immerse the lower part of the sensor in water, check the conductivity between the housing an d the terminal as the water temperature chang es.

1. Conductivity check.
   a) Conductivity occurs at temperatures of 100°C and above.
   6) No conductivity at temperatures of 95°C or below.

Pressure switch check

Disconnect the connector and check the battery terminals at pins "1" and "2".

a) Install the pressure gauge asse mbly. b) Check the continuity between terminals "1" and "4" of the switch con nector against the diagram.

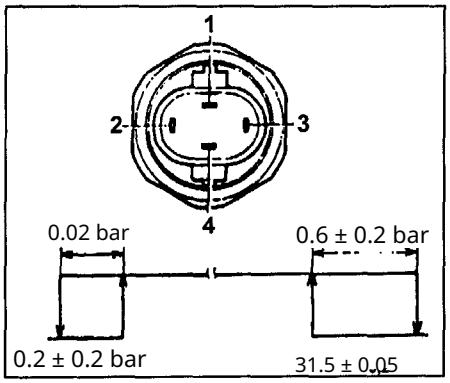

c) Check the continuity between terminals " 2" and "3" of the switch connector accordin g to the diagram.

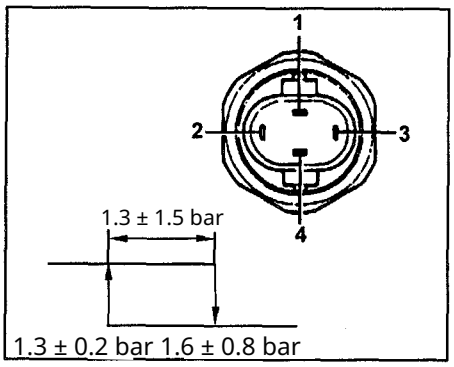

Check electropneumatic valve

1. Connect the battery to the valve termi nals. Check that air flows freely through valve.
2. Disconnect the battery and check that air d oes not pass through the valve.

Inspection of Fa n Relay No. 2

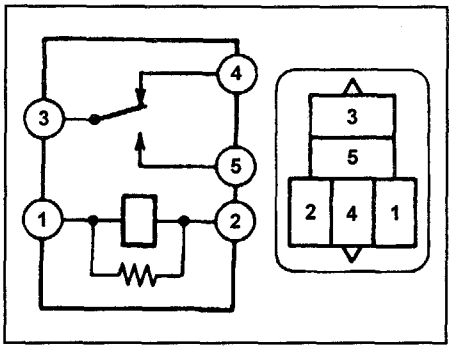

1. Check for continuous conductivity b etween terminals "1" and "2". 2. Ch eck for conductivity between terminal s "4" and "3". 3. Check for absence of conductivity between ter minals "3" and "5".
4. Check for continuity between terminals "3 " and "5" and the absence of continuity betw een terminals "3" and "4" of the relay when battery voltage is applied

Check of relay fan No. 3

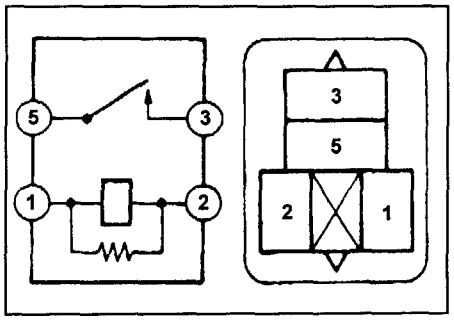

1. Check for constant continuity between te rminals "1" and "2".

2. Check for no continuity between term inals "3" and "5". 3. Check for c ontinuity between terminals "3" and "5" of the relay when battery voltage is app lied to terminals "1" and "2".

Checking relay EX-N1 (automatic air conditioner)

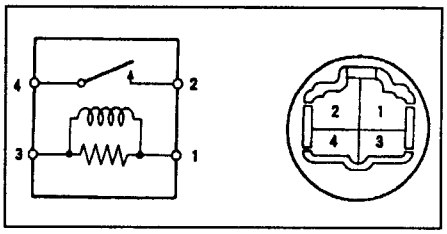

1. Check for continuous conductivity between terminals "1" and "3". 2. Check that there is no conductivity between terminals "2" and "4".
3. Check for continuity between terminals "2" and "4" of the relay when battery voltage is applied to terminals "1" and "3".

Inspection of the blower fan speed switch heater fan (lever-type panel)

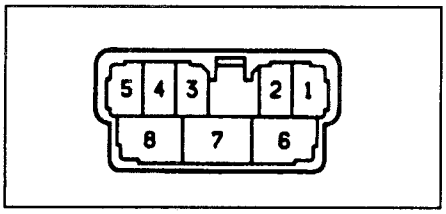

Check for continuity between terminals at the different positions of the blower fan speed selector switch.

Position of the switch	Continuity
OFF	-
LO	6 - 5
M1	6 - 5 - 1
M2	6 - 5 - 2
HI	6 - 5 - 8
Any position	3-4 (illumination)

Check of the switch control panel air conditioner "A/C - ECON" (lever-type panel)

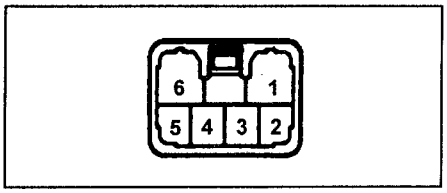

Check for continuity between the terminals in the switch's different positions.

Switch position	Continuity
OFF	-
A/C (air conditioning)	5 - 4
ECON	5 - 4 - 6
Any position	1 - 2 (illumination)

Inspection of the blower fan speed switch (push-button panel)

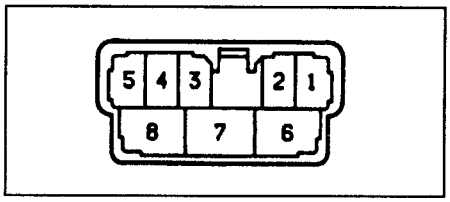

Check for continuity between the terminals at the different positions of the fan speed switch.

Position switch	Continuity
OFF	-
LO	6 - 5
M1	6 - 5 - 1
M2	6 - 5 - 2
HI	6 - 5 - 8

Check of the blower fan speed selector (automatic air conditioning)

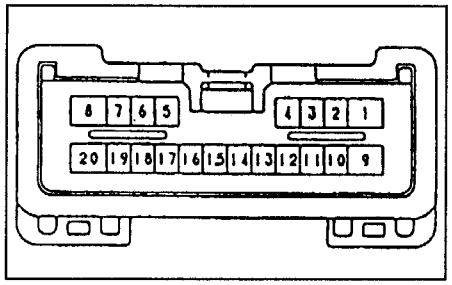

Check the resistance between terminals "12" and "13" of the control panel connector at the different positions of the switch. Position of the switch

	Resistance
OFF	0 kΩ
AUTO	0.48 - 0.72 kΩ
LO	0.96 - 1.44 kΩ
M1	1.44 - 2.16 kΩ
M2	1.92 - 2.88 com
HI	2.4 - 3.6 km

Check the air-direction switch (button-type panel)

Check for continuity between the terminals of the control panel connector at the different positions of the air-direction switch.

Switch position	Continuity
FACE (face)	8 - 18
BI - LEVEL	8 - 17
FOOT (to feet)	8 - 16
FOOT - DEF	8 - 15
DEF (on the glass)	8 - 14

Inspection of the air intake mode switch (push-button panel)

Check for continuity between the terminals of the control panel connector at the various positions of the air intake mode switch.

Position switch	Conductivity
RECIRC (recirculation)	8 - 2
FRESH (ventilation)	8 - 3

Check the control panel air conditioner "A/C - ECON" switch (push-button panel type)

Check for conductivity between the terminals of the control panel connector at the various positions of the "A/C - ECON" switch.

Switch position	Continuity
A/C (air conditioning)	19 - 6
ECON	19 - 7

Check of the temperature controller

1. Measure the resistance between the terminals "10" and "13" of the control panel connector. Resistance ..... 1.2 - 1.8 kΩ 2. Connect the tester to terminals "11" and "13" of the control panel connector and measure the resistance between the terminals with the coolant valve switch set to MAX HOT and MAX COLD. Resistance:

at MAX NOT. ..... 2,4 - 3,6 KOM
8 MAX COLD. 3. ..... 0 Ω

Make sure that when switching the selector from the MAX COLD position to the MAX HOT position the resis-
The pressure changes smoothly.

Checking the main heater relay

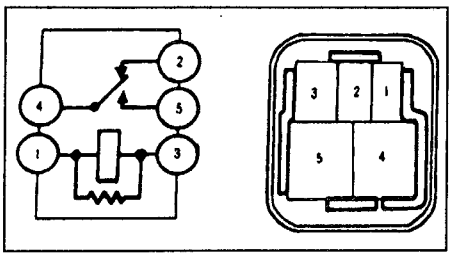

1. Check for continuity between terminals "1" and "3".
2. Check for continuity between terminals "2" and "4".
3. Check for absence of continuity between terminals "4" and "5".
4. When battery voltage is applied to terminals "1" and "3", check for continuity between terminals "4" and "5" and the absence of continuity between terminals "2" and "4" of the relay. Checking the operation of the heater fan motor 1. Connect the battery "+" to terminal "1" and "-" to terminal "2"

ensure smooth rotation of the rotor.
confirm the presence of the characteristic 2. The presence of resistance between the sound of the valve actuating.

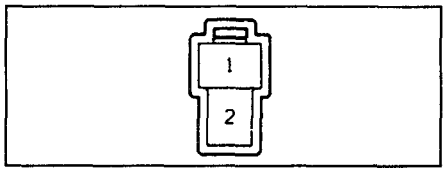

2. Measure the motor current.
Rated current.... .....less than 3 A

Operation check

electric motor
condenser fan
1. Connect the "+" of the battery to terminal "2", and to terminal "1" of the connector, check the smooth rotation of the rotor.

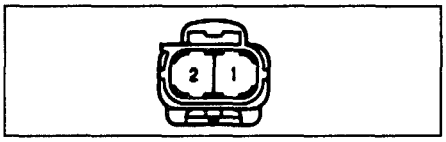

2. Measure the motor current.
Rated current..... less than 1.5 A

Electromagnetic check

valve
Connect the battery "+" terminal to terminal "4", ground and "-"

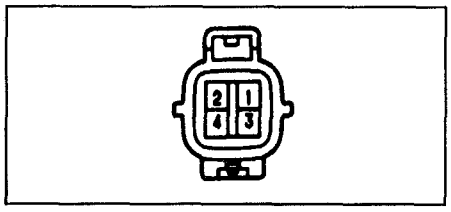

Resistor check fan (push-button panel type)

1. Check the resistance between the terminals of the fan resistor.

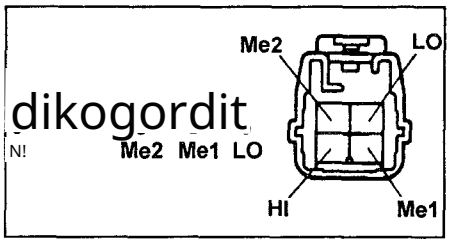

Conclusions	Resistance
HI - Me2	0.4 kohm
Me2 - Me1	0.8 kΩ
Me1 - LO	2.0 kΩ

The presence of resistance between terminals "HI" and "Me2" indicates that the fuse is functioning correctly.

Power check of the transistor (automatic air conditioner)

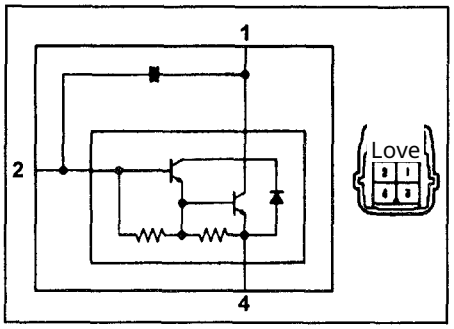

1. Connect the "+" of the battery to terminal "1" of the connector, and connect, through a 12V 3.4W lamp, to terminal "4" of the connector. 2. Apply battery voltage through the lamp to terminal "2", and make sure that the lamp between terminal "1" and the battery "+" lights up.

Air conditioner amplifier check (panel push-button type)

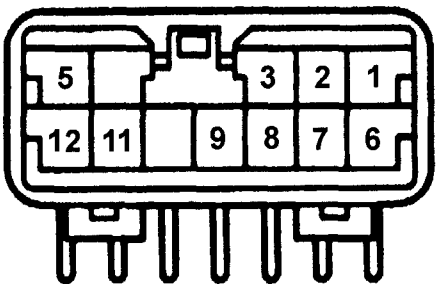

Conclusions		Inspection conditions	Standard
AC1	1 - 5	Air conditioner compressor switch in the ON position	10...14 V → less than 1.0 V
PRS	2 - 5	Standard refrigerant pressure → refrigerant pressure less than 2 kg/cm² or more than 32 kg/cm²	10...14 V → less than 1.0 V
ECON	3 - 5	ECON air conditioner switch from ON to OFF position	10...14 V → less than 1.0 V
GND	5 - "zemlya" (ground)	Continuously	Continuity
ACT	6 - 5	Air conditioner compressor switch in the ON position, engine idling → increase engine speed	10...14 V → less than 1 V
A/C (air conditioning)	7 - 5	Air conditioner switch from OFF to ON position	less than 1.0 V → 10...14 V
TE	8 - 5	The temperature in the evaporator is 0°C	2.0...2.4 V
TE	8 - 5	The temperature in the evaporator is 15°C	1.4...1.8 V
LED	9 - 5	The air conditioning switch or the ECON switch from OFF to ON	less than 1 V → 4.5...5.5 V
MgC	11 - 5	The air conditioning compressor switch from OFF to ON	10...14 V → less than 1 V
SG	12 - "ground"	Continuously	Continuity

Checking the air conditioning amplifier (automatic air conditioning)

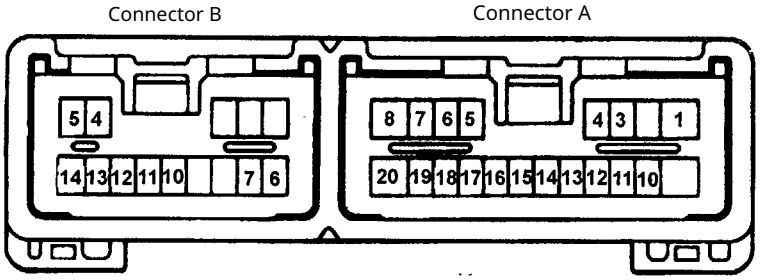

Conclusions		Inspection conditions	Standard
IG	1 - 20	Continuously	10-14 V
S-A/C	3 - 20	Air conditioner switch from OFF to ON	less than 1 V → 10...14 V
L-A/C	4 - 20	Air conditioner switch from OFF to ON	less than 1 V - 4.5...5.5 V
TR	5 - 8	Cabin temperature 25°C	1.8...2.2 V
TR	5 - 8	Cabin temperature 40°C	0.85...1.25 V
TAM	6 - 8	Ambient air temperature 25°C	1.35...1.75 V
TAM	6 - 8	Ambient air temperature 40°C	0.85...1.25 V
TE	7 - 8	The temperature in the evaporator is 0°C	2.0...2.4 V
TE	7 - 8	Evaporator temperature 15°C	1.4...1.8 V
SG	8 - "ground"	Continuously	Conductivity
DEF	10 - 20	Airflow direction switch from any position except DEF to the DEF position	10...14 V → less than 1 V
FOOT	11 - 20	Airflow direction switch from any position except FOOT to the FOOT position	10...14 V → less than 1 V
MC	12 - 20	Temperature regulator from the MAX HOT position to the MAX COOL position	1.0 V → less than 10...14 V
Mn	13 - 20	Temperature control from the MAX COOL position to the MAX HOT position	1.0 V → less than 10...14 V
S5	14 - 8	Continuously	4.5...5.5 V
TW	15 - 8	Coolant temperature 0°C	2.8...3.2 V
TW	15 - 8	Coolant temperature 40°C	1.8...2.2 V
TW		Coolant temperature 70°C	0.9...1.3 V
TS	16- 8	Illumination sensor in shadow	less than 0.8 V
TS	16- 8	Illumination sensor in shadow → in light	less than 0.8 V → 4.3 V
TP	17 - 8	Move the temperature control from MAX HOT to M AX COOL	1.0 V → 4 V
TSET	18 - 8	Move the temperature control from MAX HOT to MAX COOL	less than 1.0 V → 5 V
BSET	19 - 8	Move the heater fan speed selector from OFF to HI Contin uously	less than 1.0 V → 5 V
GND	20 - "ground"		Conductivity
FR	4 - 20	Ignition key in ON position, move the heater fan spee d selector from any position other than HI to HI Heater fan switch	10...14 V → less than 1 V
HR	5 - 20	from OFF to ON	10...14 V → less than 1 V
PSW	6 - 20	Standard refrigerant pressure → refrigerant pressure less than 2 kg/cm² or greater than 32 kg/cm²	10...14 V → less than 1.0 V

Conclusions		Inspection conditions	Standard
ACT	7 - 20	Move the air conditioning compressor switch to the ON position with the engine idling → increase the engine speed	10...14 V → less than 1 V
MGC	10 - 20	The air conditioning compressor switch from OFF to ON	10...14 V → less than 1 V
AC1	11 - 20	air conditioning compressor switch from OFF to ON	10...14 V → less than 1 V
ECO	12 - 20	In ECON mode the electromagnetic clutch does not operate	less than 1 V
ECO	12- 20	In ECON mode the electromagnetic clutch operates	10...14 V
VM	13 - 20	Fan speed position switch to positions LO → M1 → M2 → HI (manual control)	8.8 V 7.5 V → 5.0 V → less than 0.5 V
BLW	14 - 20	Ignition key in the ON position, heater fan speed position switch from OFF to LO	less than 1 V → 1.5 V

Checking the built-in illumination switch (push-button type panel)

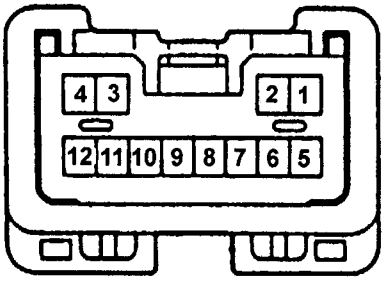

Conclusions		Inspection conditions	Standard
ILL+	1 - 12	Lighting control switch from OFF to ON	less than 1 V → 10...14 V
L A/C	2 - 12	Air conditioner switch from OFF to ON	less than 1 V → 1.5 V
+B	3 - 12	Constant	10...14 V
ACC	4 - 12	Ignition key from OFF to ACC	less than 1 V → 10...14 V
ECON	5 - 12	ECON air conditioner switch from OFF to ON	less than 1 V → 10...14 V
A/C	6 - 12	Air conditioner switch from OFF to ON Ignition key from OF	less than 1 V → 10...14 V
IG	10 - 12	F to ON Rear window heater switch from OFF to ON	less than 1 V → 10...14 V
Rr-DEF	11 - 12		10...14 V → less than 1 V within 1 5 minutes Con
GND	12 - "ground"	Continuously	ductivity

Checking air conditioning control panel operation (push-button type panel)

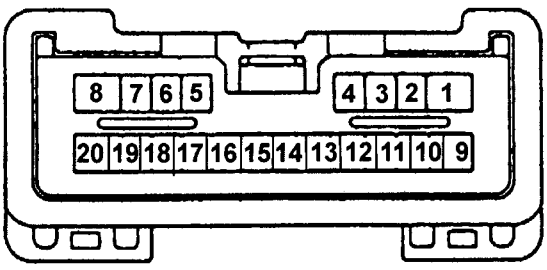

Conclusions		Inspection conditions	Standard
IG	1 - 8	Ignition key from OFF to ON	less than 1 V → 10...14 V
FRS	2 - 8	Air intake flap from RECIRC (recirculation) position to the FRESH position	10...14 V → less than 2 V

Conclusions		Inspection conditions	Standard
REC	3 - 8	Air intake damper from FRESH position to RECIRC position	10...14 V → less than 1 V
RDEF	4 - 8	Rear window heater switch from OFF to ON	10...14 V → less than 1 V for 15 minutes, then l
L-A/C	5 - 8	Air conditioner switch or ECON switch from OFF to ON (condenser fan switch in a position other than OFF)	ess than 1 V → 1.5 V
A/C (air conditioning)	6 - 8	Air conditioner switch from OFF to ON (condenser fa n switch in a position other than OFF)	less than 1 V → 10...14 V
ECON	7 - 8	ECON switch from OFF to ON (condenser fan switch in a position other than OFF)	less than 1 V → 10...14 V
GND	8 - "ground"	Continuously	Continuity
ILL+	9 - 8	Lighting control switch from OFF to ON	less than 1 V → 10...14 V
+B	11 - 8	Continuously	10...14 V
ACC	12 - 8	Ignition key from OFF to ACC. Airflow mode selector from a	less than 1 V → 10...14 V
DEF	14 - 8	ny position except DEF to DEF	10...14 V → less than 1 V
F/D	15 - 8	Airflow mode selector from any position except FOOT/DEF to FOOT/DEF	10...14 V → less than 2 V
FOOT	16 - 8	Airflow direction switch from any position except FOOT to the FOOT position	10...14 V → less than 1 V
B/L	17 - 8	Airflow mode selector from any position except BI-LEVEL to BI-LEVEL	10...14 V → less than 2 V
FACE	18 - 8	Airflow direction switch from any position except FACE to the FACE position	10...14 V → less than 2 V
A/C+	19 - 8	Turn the condenser fan switch from the OFF position to any position other than OFF	less than 2 V → 10...14 V
ILL-	20 - 8	Continuously	Continuity

Check the operation of the air-conditioning control panel (automatic air conditioning)

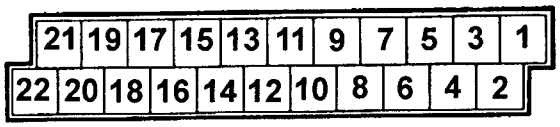

Conclusions		Inspection conditions	Standard
ILL+	1 - 10	Lighting control switch from OFF to ON	less than 1 V → 10...14 V
+B	2 - 10	Continuously	10...14 V
ILL+	3 - 10	Lighting control switch from OFF to ON	less than 1 V → 10...14 V
ACC	4 - 10	Turn the ignition key from OFF to ACC	less than 1 V → 10...14 V
IG	5 - 10	Turn the ignition key from OFF to IG	less than 1 V → 10...14 V
TSET	6 - 9	Turn the temperature control from MAX HOT to MAX COOL	0 V → 5.0 V
S5	7 - 9	Continuously	4.5...5.5 V
B SET	8 - 9	Move the fan speed selector to positions OFF → M1 → HI	0 V → 3.4 V → 5.0 V
SG	9 - 10	Continuously	Conductivity
GND	10 - "ground"	Continuously	Conductivity

Conclusions		Inspection conditions	Standard
L-A/C	11 - 10	Air conditioning switch from OFF to ON (condenser fan switch in any position other than OFF)	less than 1 V → 4.5...5.5 V
A/C (air conditioning)	12 - 10	Air conditioning switch from OFF to ON (condenser fan switch in any position other than OFF)	10...14 V → less than 1 V
DEF	13 - 10	Airflow direction switch from any position except DEF to the DEF position	10...14 V → less than 1 V
FOOT	14 - 10	Switch the air-flow direction from any position, except FOOT, to the FOOT position	10...14 V → less than 1 V
F/D	15 - 10	Airflow mode selector from any position except FOOT/DEF to FOOT/DEF	10...14 V → less than 2 V
FACE	16 - 10	Airflow direction switch from any position except FACE to the FACE position	10...14 V → less than 2 V
R DEF	17 - 10	Switch the rear window heater from the OFF position to the ON position	10...14 V → less than B 1 for 15 minutes
B/L	18 - 10	Switch the air-flow direction from any position, except V/, to the BI-LEVEL position	10...14 V → less than 2 V
FRS	19 - 10	Air intake flap from RECIRC (recirculation) position to the FRESH position	10...14 V → less than 2 V
REC	20 - 10	Move the fresh air intake damper from the FRESH position to the RECIRC position	10...14 V → less than 2 V
GND	21 - "ground"	Continuously	Conductivity
GND	22 - "ground"	Continuously	Conductivity

Check the operation of the air conditioning control unit (automatic air conditioning)

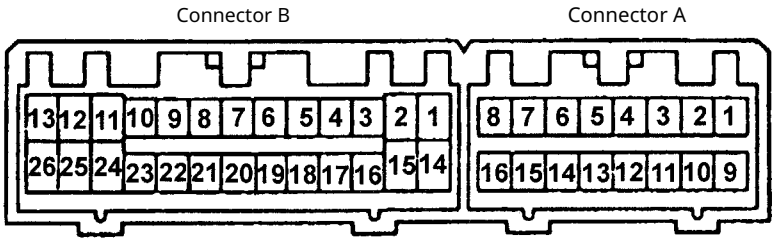

	Conclusions	Inspection conditions	Standard
NEG	A1-B14	With the engine running (4A-GE)	Pulse signals
NGD	A2-B14	With the engine running (2C)	Pulse signals
LOCK	A3-B14	With the engine running and the air conditioning compressor switch in the ON position	Pulse signals
FR	A6-B14	Ignition key in the ON position, heater fan speed selector moved from any position except HI to the HI position	10...14 V → less than 1 V
ECO	A7-B14	At an ambient temperature of 18–25°C after the engine, compressor, and air conditioner have operated simultaneously for minutes, switch the temperature control from MAX COOL to MAX HOT Air conditioner compressor switch	less than 1 V → 10...14 V
MGC	A8-B14	from OFF to ON	10...14 V → less than 1 V
ACT	A10-B14	With the air conditioner compressor switch in the ON position, engine idling → increase the engine speed	10...14 V → less than 1 V
PSW	A11-B14	Standard refrigerant pressure → refrigerant pressure less than 2 kg/cm² or greater than 32 kg/cm²	10...14 V → less than 1 V

Conclusions		Inspection conditions	Standard
VM	A12-B14	Fan speed position switch to positions LO → M1 → M2 → HI (lever-type air conditio ner control panel)	8.8 V → 7.5 V → 5.0 V → less than 1.0 V
BLW	A13-B14	Ignition key in ON position, heater fan speed switch moved from OF F to LO	less than 1 V → 1.5 V
HR	A14-B14	Heater fan switch moved from OFF to ON	10...14 V → less than 1 V
AC1	A15-B14	The air conditioning compressor switch from OFF position to ON position	10...14 V → less than 1 V
SG	B1-B14	Continuously	Continuity
TW	B1-B1	Coolant temperature 0°C	2.8...3.2 V
TW	B1-B1	Coolant temperature 40°C	1.8...2.2 V
TW	B1-B1	Coolant temperature 70°C	0.9...1.3 V
TAM	B4-B1	Ambient air temperature 25°C	1.35...1.75 V
TAM	B4-B1	Ambient air temperature 40°C	0.85...1.25 V
TE	B5-B1	The temperature in the evaporator is 0°C	2.0...2.4 V
TE	B5-B1	The temperature in the evaporator is 15°C	1.4...1.8 V
MH	B6-B14	Temperature control from MAX COOL position to MAX HOT position	less than 1 V → 10...14 V
FOOT	B7-B14	Airflow direction switch from any position except FOOT to the FOOT position	10...14 V → less than 1 V
B/L	B8-B14	Airflow direction switch from any position, except V/L, to BI-LEVEL position	10...14 V → less than 1 V
FACE	B9-B14	Blower direction switch from any position except FACE to the FACE position	10...14 V → less than 1 V
REC	B10-B14	Air intake damper from FRESH position to RECIRC position	10...14 V → less than 1 V
S5	B11-B14	Continuously	4.5...5.5 V
IG	B12-B14	Continuously	10...14 V
ILL+	B13-B14	Lighting control switch from OFF to ON	less than 1 V → 10...14 V
GND	B14 - "ground"	Continuously	Continuity
TS	B16-B1	Illumination sensor in shadow	less than 0.8 V
TS	B16-B1	Illumination sensor in shadow → in light	less than 0.8 V → 4.3 V
TR	B17-B1	Cabin temperature 25°C	1.8...2.2 V
TR	B17-B1	Cabin temperature 40°C	0.85...1.25 V
TP	B18-B1	Move the temperature control from MAX HOT to MA X COOL	1.0...4.0 V
MC	B19-B14	Move the temperature control from MAX HOT to M AX COOL	less than 1 V → 10...14 V
DEF	B20-B14	Airflow direction switch from any position except DEF to the DEF position	10...14 V → less than 1 V
F/D	B21-B14	Airflow direction switch from any position except FOOT/DEF to the FOOT/DEF position Rear window he	10...14 V → less than 1 V
RDEF	B22-B14	ater switch from OFF to ON	10...14 V → less than 1 V for 15 minutes
FRS	B23-B14	Air intake damper from RECIRC position to FRESH p osition	10...14 V → less than 1 V
ACC	B25-B14	Ignition key from the OFF position to the ACC position	less than 1 V → 10...14 V
+B	B26-B14	Continuously	10...14 V

SRS (Supplemental Restraint System)

Safety measures

Errors in the operation and maintenance of the airbag system may cause the system to deploy unintentionally during service operations or fail to deploy in the event of an accident; therefore always follow the procedures described in the repair manual. 1. Never disassemble the airbag module in the steering wheel. 2. Do not subject the steering wheel pad to impacts or strong magnetic fields.

3. Do not allow the steering wheel pad to be heated or exposed to open flame.
4. If grease, water, or other liquids get on the surface of the steering wheel pad, immediately remove them with a dry cloth.
5. Do not remove the steering wheel pad; do not operate the vehicle with the steering wheel pad removed.
6. Never install the steering wheel or steering wheel cover on another vehicle.

7. When storing, place the steering wheel pad face side up on a flat, stable surface. Never place anything on the steering wheel pad.

8. If vehicle repairs involve heavy impacts, first lock the sensor.

9. Even after a minor collision in which the airbag did not deploy, always inspect the surface of the pad and the condition of the sensor. If you find dents, cracks, deformations, etc., replace the entire airbag module assembly.

10. When disposing of the vehicle or the steering wheel, always discharge the airbag first.
11. The external surface of the airbag module becomes hot when it operates. Wait until the module cools to normal temperature. Do not use water for cooling!

Airbag (models up to 1996)

Removing the steering wheel pad

1. Remove the covers of the steering column. 2. Using a socket for bolts with an internal hex, loosen the retaining bolt until it turns freely and slide the retaining clip as shown in the illustration.

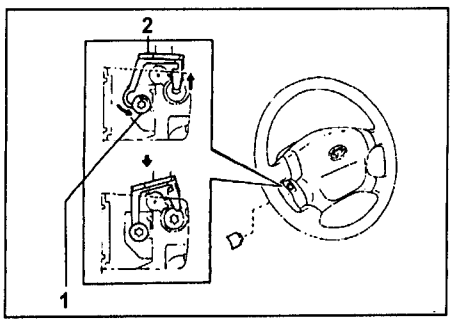

3. Unscrew the two mounting bolts and remove the pad by pulling it toward you.

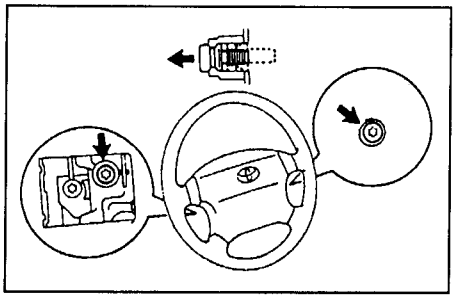

Inspection of the steering wheel pad Replace the pad with a new one in the following cases:

a) The airbag has deployed.
6) The surface of the cover, the sensor or the igniter have damage or deformations.
c) The airbag is damaged or not secured in the steering wheel cover.

Steering wheel inspection

1. Check the condition of the steering wheel. Replace it with a new one if:

a) The metal bracket of the steering wheel is deformed.

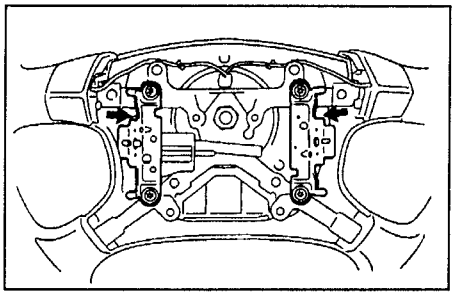

b) The new cover cannot be installed without significant force.

Installation of the steering wheel cover

1. Before installing the cover, check that the locking bolt is loosened and can be turned without resistance.

against resistance.

2. Fit the cover onto the steering wheel and tighten the mounting bolts.

Tightening torque..... ..... 9 N·m

3. Close the safety bracket and tighten the bolt.

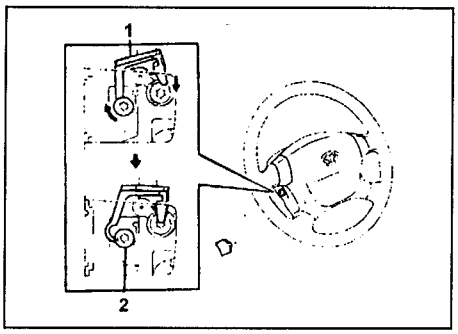

Tightening torque.. ..... 9 N·m

4. Install the two lower covers.

Airbags (models from 1996)

Models produced after 1996 are equipped with an airbag system: driver (with mechanical control) or driver and passenger (with electronic control).

The airbag with mechanical control is similar to the 1995 models.

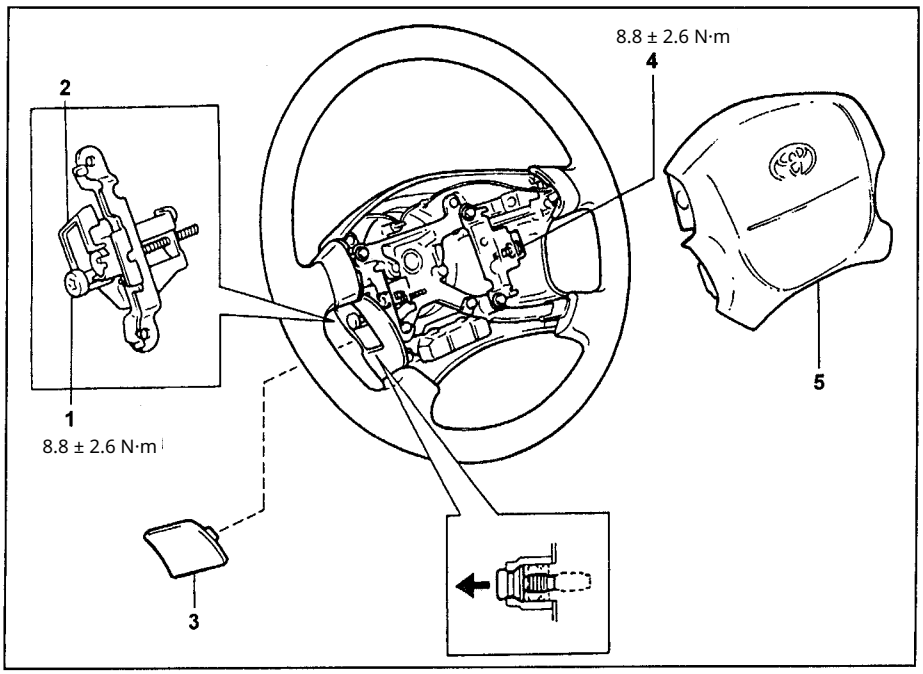

Removing the steering wheel pad (models before 1996). 1 - retainer, 2 - fuse clip, 3 - lower steering wheel covers, 4 - bolts securing the steering wheel pad, 5 - steering wheel pad. - bolt of the pre-

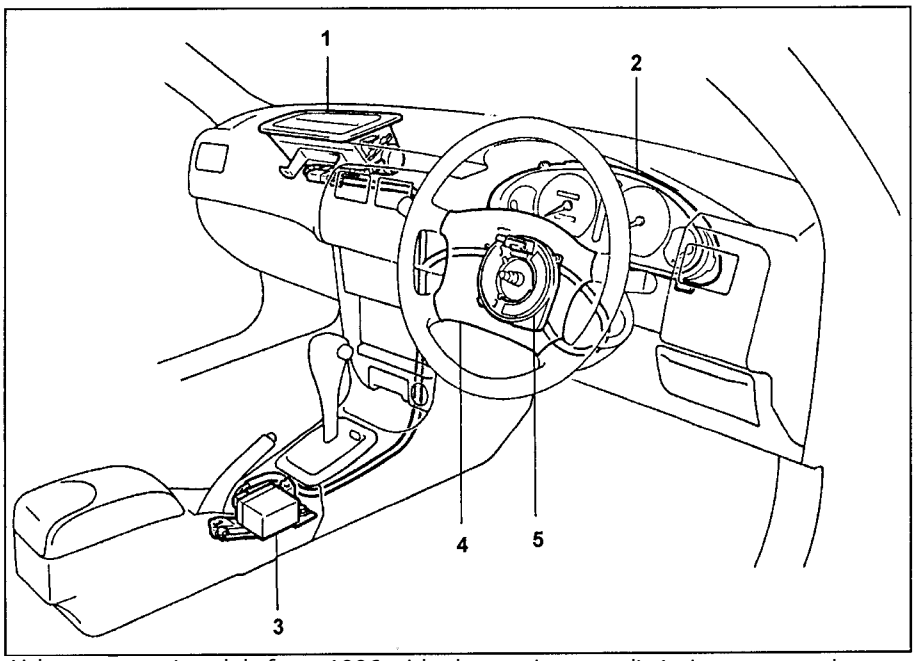

Airbag system (models from 1996 with electronic control). 1 - instrument cluster (airbag warning lamp), 2 - passenger airbag, 3 - safety sensor, 4 - steering wheel pad (driver's airbag), 5 - spiral cable.

Table of fault codes for the airbag system.

Code	Malfunction	Cause of malfunction	Signal lamp
—	Standard	—	does not light
	Drop in supply voltage	Battery airbag sensor	Lights
11	Short circuit in the inflator electrical circuit inflator electrical circuit (to ground)	Inflator (driver and front passenger airbags), contact, airbag sensor, wiring Inflator (driver and front passenger airbags), contact, airbag sensor, wiring Steering wheel cover	Lights
12	Short circuit In the inflator electrical circuit inflator electrical circuit (to supply) Short circuit		Lights
13	in circuit "D" of the inflator	(igniter), contact, airbag sensor, wiring	burning
14	Open circuit in diagram "D" igniter (electrical)	Steering wheel trim (inflator), contact, airbag sensor, wiring	Lights
31	Control unit malfunction Short circuit in	Airbag sensor	burning
53	electrical inflator in diagram "R"	Front passenger seat airbag (electrical inflator), contact, airbag sensor, wiring Front passenger seat airbag (electrical inflator), contact, airbag sensor, wiring	Lights
54	Open circuit in diagram "R" igniter (electrical)		Lights

Note:
When two or more fault codes are displayed, they appear starting from the lower number.
If a code appears that is not listed in the table, the airbag sensor is malfunctioning.
If the trouble codes do not illuminate or illuminate intermittently, check the Ts connector of the diagnostic connector.

System diagnosis

1. Checking the airbag system warning lamp. Set the ignition switch to the "ACC" or "ON" position and check that the warning lamp lights and then goes out after approximately 6 seconds. Note: If the indicator sometimes lights or remains lit even when the ignition switch is in the "OFF" position, then check for a short circuit in the indicator circuit.

2. Reading trouble codes. a) Set the ignition switch to the "ACC" or "ON" position and wait about 20 seconds. b) Short the "Ts" and "E1" terminals of the diagnostic connector. Note: Incorrectly connecting the terminals may cause damage to the system.

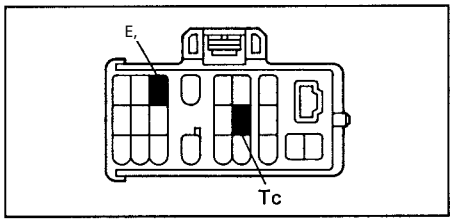

c) If there is no fault, the indicator will flash twice per second.

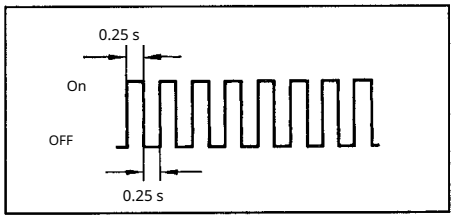

d) If a fault is present, the indicator will begin to flash at a variable rate. Determine the fault codes.

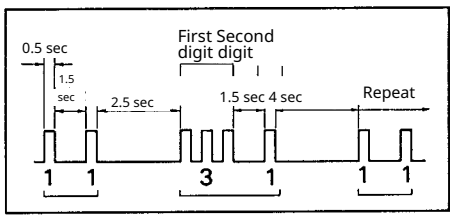

Note: see ABS diagnosis for a more detailed definition of the fault code.

Removal and installation of the passenger airbag

When removing and installing the airbag, follow the assembly illustration.

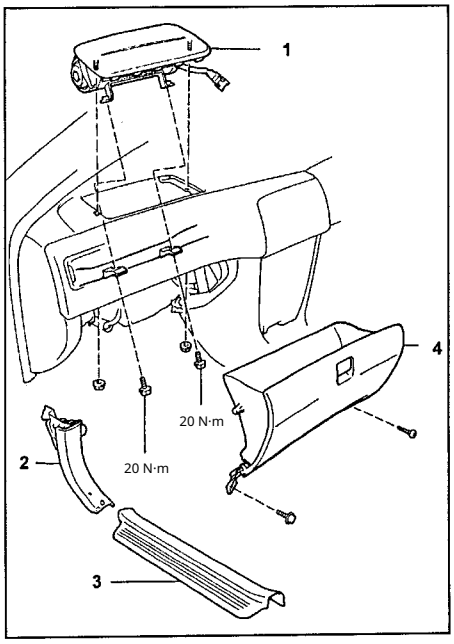

Removal and installation of the passenger airbag. 1 passenger airbag, 2 side body trim, 3 left front door sill trim, 4 glove box.

Removal and installation of the driver's airbag

When removing and installing the airbag, follow the assembly illustrations.

When installing the spiral cable, turn it fully clockwise until it stops, then turn it counterclockwise 2.5 turns until the marks align (see illustrations).

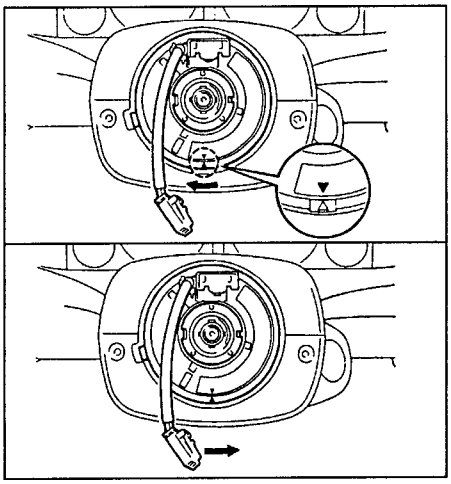

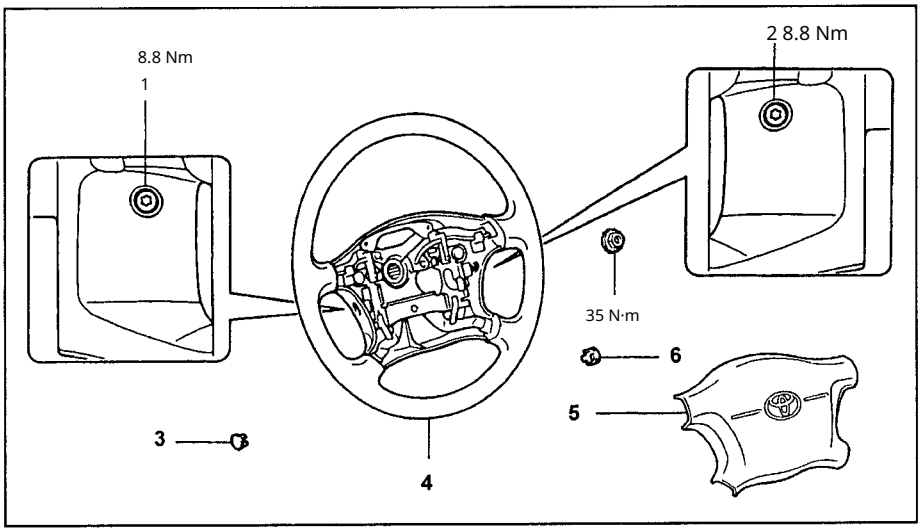

Removal and installation of the driver airbag (models from 1996, SV Touring). 1, 2 - trim mounting bolt, 3, 6 - steering wheel cover, 4 - steering wheel, 5 - steering wheel trim.

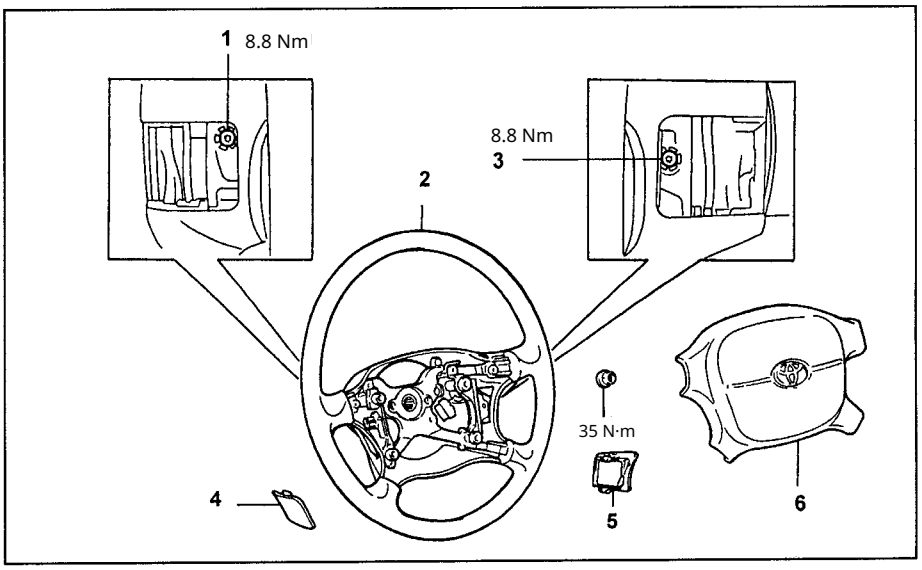

Removal and installation of the driver's airbag (models from 1996, BZ Touring). 1, 3 - trim mounting bolt, steering wheel, 2 - 4, 5 - steering wheel cover, 6 - steering wheel trim.

Airbag sensor

Removal and installation of the sensor
1. Remove the center console.
2. Disconnect the sensor connectors.
3. Unscrew the 3 bolts and remove the sensor.

Safety system (models from 1997)

Models produced since 1997 are equipped with a driver and passenger safety system with electronic control and seat belt pretensioners.

System diagnosis

Check the warning lamp and read fault codes for models from 1996 onwards.

Fault Code Table of the safety system.

Code	Malfunction
—	Normal system condition Supply Voltage Drop
11	Short to ground of the central unit driver sensor and airbag Central system sensor SRS is constantly on
12	Short to power in the wiring harness wires between the central sensor and the driver airbag
13	Short circuit in the circuit of the squib or in the wiring harness between the sensor and the driver's airbag
14	Open circuit in the squib circuit or in the wiring harness between the sensor and the driver's airbag
31	Malfunction of the central sensor
51	Short to ground of the central unit Passenger sensor and airbag Central sensor of the SRS system constantly on
52	The wiring harness between the center sensor and the passenger airbag is shorted to power

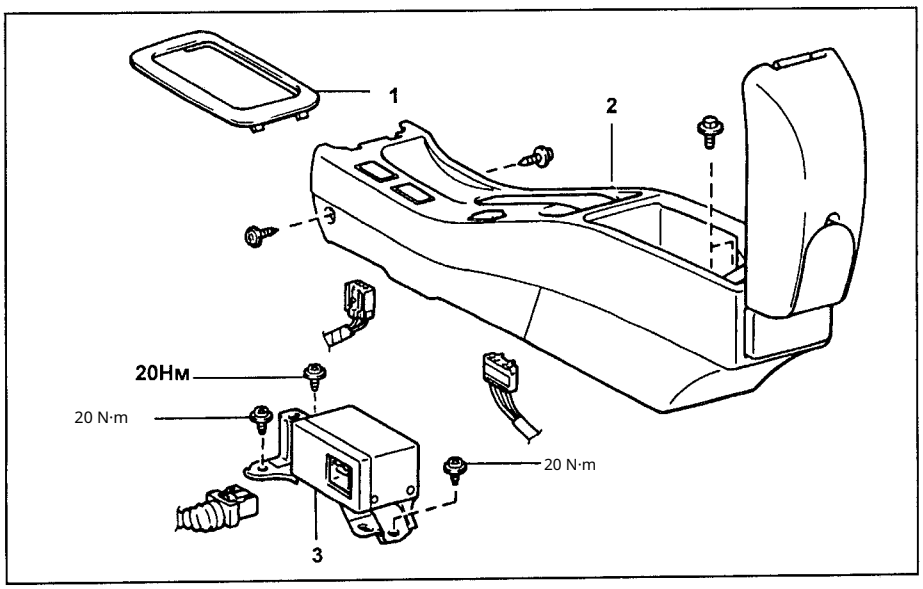

Airbag sensor (models from 1996). 1 - trim opening for the automatic transmission lever, 2 - rear console, 3 - center sensor.

53	Short circuit in the igniter circuit of the passenger airbag igniter or in the wiring harness between the sensor and the passenger airba
54	g Open circuit in the igniter circuit or i n the wiring harness between the sensor and the passenger airb
61, 71	ag Short to ground in the wiring harnes s between the center sensor and the pretensioner driver's belt Central SRS sensor constantly on
62, 72	Short to power in the wiring harness between the central sensor and the seat belt pretensioner
63, 73	Short circuit in the pretensioner igniter of the seat belt Shorting of the wiring harness between the central sensor and the pretensioner
64, 74	Break in the circuit of the pretensioner igniter Open circuit in the harness between the central sensor and the pretensioner

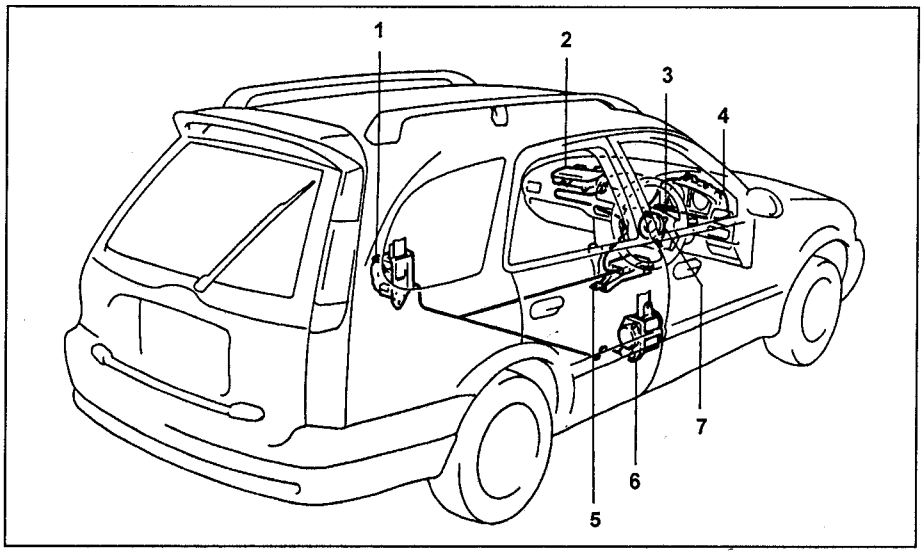

Safety system (models from 1997). 1 - left seat belt pretensioner, 2 - passenger airbag, 3 - steering wheel cover, 4 - instrument cluster (SRS indicator), 5 - central safety system sensor, 6 - driver seat belt pretensioner, 7 - spiral cable.

Safety System (models from 1998)

Models produced from 1998 are distinguished from earlier ones by the installation of additional impact sensors in the front part of the vehicle.

System diagnosis

Check the warning lamp and read fault codes for models from 1996 onwards.

Front sensors

safety system

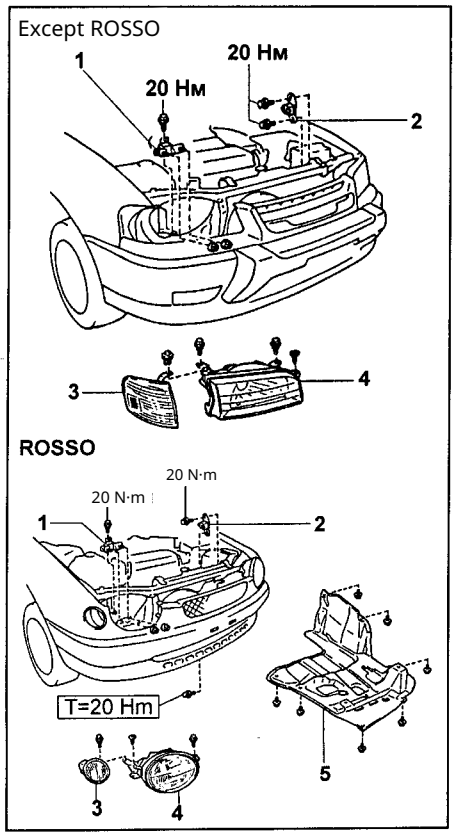

Front sensors of the safety system. 1 - right sensor, 2 - left sensor, 3 - turn signal, 4 - headlight, 5 - engine protection.

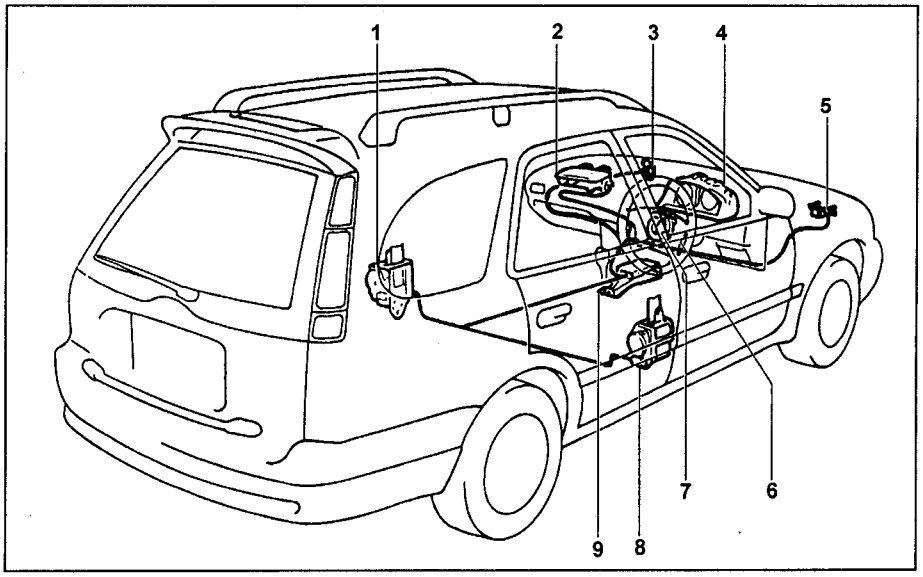

Safety system (models from 1998). 1 - left seat belt pretensioner, 2 - passenger airbag, 3 - left front impact sensor, 4 - instrument cluster (SRS indicator), 5 - right front impact sensor, 6 - spiral cable, 7 - steering wheel cover, 8 - driver seat belt pretensioner, 9 - central safety system sensor.

Safety system fault codes (models from 1998).

Code	Malfunction
—	Normal system condition Supply Voltage Drop
11	Short to ground of the central sensor and driver airbag central SRS sensor permanently on
12	Short to power in the wiring harness between the central sensor and the driver's airbag
13	Short circuit in the pyrotechnic igniter circuit or in the wiring harness between the sensor and the driver airbag
14	Open circuit in the pyrotechnic igniter circuit or in the wiring harness between the sensor and the driver
15	Open circuit between the central sensor and the right front sensor Open circuit in the right front sensor circuit Malfunction of the central sensor
15	Short circuit between the central sensor and the right front sensor Short circuit in the right front sensor circuit Malfunction of the central sensor
16	Open circuit between the central sensor and the left front sensor Open circuit in the left front sensor circuit Malfunction of the central sensor

Fault codes of the safety system (continued).

16	Short circuit between the center sensor and the left front sensor Short circuit in the circuit of the left/right sensor Malfunction of the central sensor
31	Malfunction of the central sensor
51	Short to ground of the center sensor and passenger airbag center SRS sensor continuously powered
52	Wiring harness between the center sensor and the passenger airbag shorted to power
53	Short circuit in the passenger airbag igniter circuit or in the wiring harness between the sensor and the passenger airbag
54	Break in the pyrotechnic igniter circuit or in the wire harness between the sensor and the passenger airbag
61, 71	Short to ground in the wire harness between the central sensor and the driver's seatbelt pretensioner The central sensor of the SRS system is continuously activated
62, 72	Short to power in the wire harness between the central sensor and the seatbelt pretensioners
63, 73	Short circuit in the seatbelt pretensioner igniter Short in the wire harness between the central sensor and the pretensioner
64, 74	Break in the seatbelt pretensioner igniter circuit Break in the wire harness between the central sensor and the pretensioner

Central sensor

safety system

When removing the sensor, follow the assembly diagram.

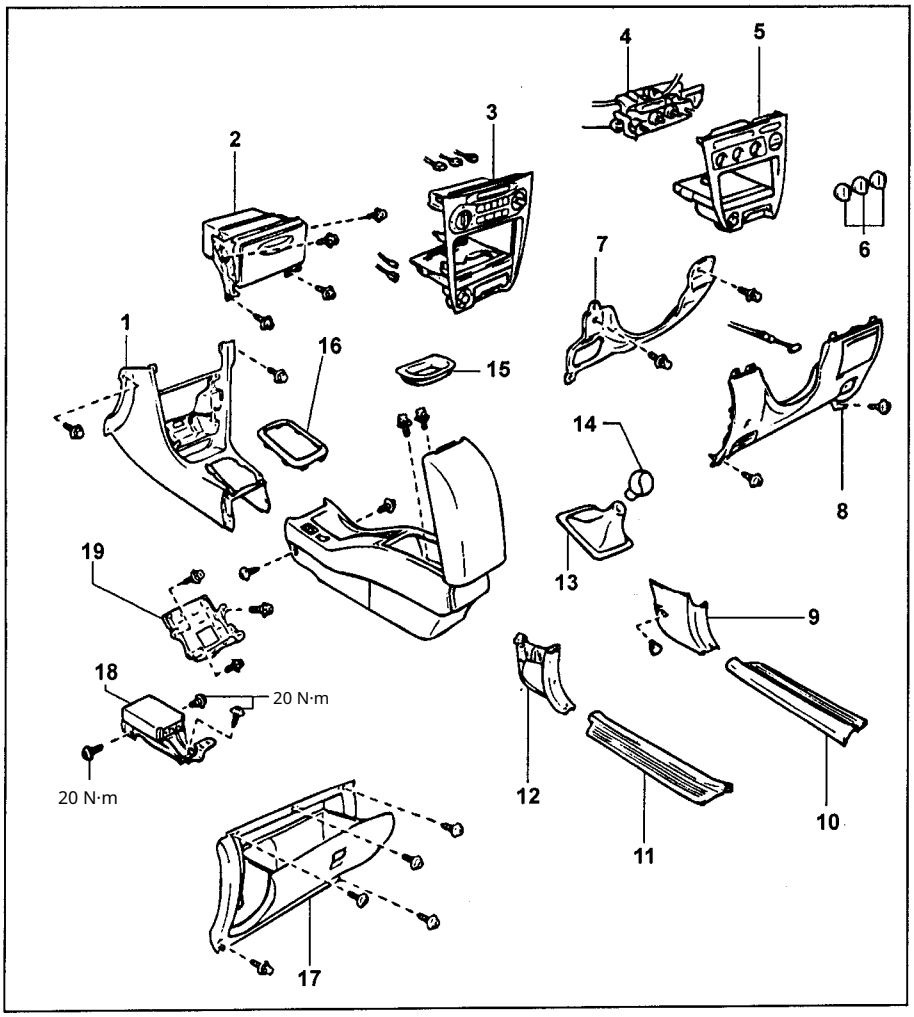

Central safety system sensor (models from 1998). 1 - front trim of the center console, 2 - radio mounting box, 3,5 - center console trim, 4 - air conditioning control panel, 6 - air conditioning control knobs, 7 - lower trim panel, 8 - lower trim panel on the driver's side, 9,12 - side interior trim, 10,11 - front door sill trim, 13,14 - gearshift lever handle and cover (manual transmission), 15 - trim for the transfer case lever opening, 16 - automatic transmission gear selector trim, 17 - glove compartment, 18 - central safety system sensor,

19 - Engine Control Unit.

Body Electrical Equipment

General information

Precautionary measures

1. Before performing work on the electrical equipment, disconnect the cable from the negative terminal of the battery.
2. If it is necessary to disconnect the accumulator battery for inspection inspections or carrying out repairs.
Before performing work, always first disconnect the cable from the negative (-) terminal that is connected to the vehicle body (ground)
. 3. When carrying out welding work the battery and the connectors of the electronic control unit should be disconnected.

4. Do not open the cover of the electronic control unit housing unless absolutely necessary, because the unit's integrated circuits may be damaged by static electricity.

Fuse replacement

1. Before servicing, turn off the ignition and all electrical equipment. 2. Install fuses only of the specified current rating.

Note: do not use a fusible link with a higher current rating or any other objects ("jumpers") in place of a blown fuse. This may cause more serious damage or fire. 3. Remove and install the fuse by pulling it straight out and
pushing it straight in without twisting or rocking it. Otherwise the contacts may spread too far and the fuse will not be held in place.

held in place.

Note: use the special tool to remove and install the fuse (see illustration).

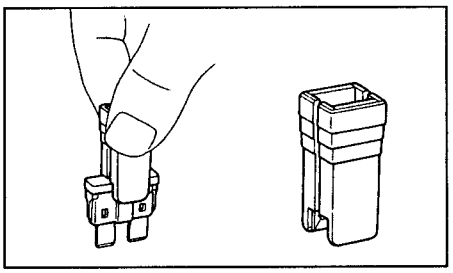

4. If the fuse blows again after replacement, check the circuits for open circuits and s

The locations of fuse boxes and relay blocks The diagrams show the layouts of fuses and relays in the fuse/relay boxes; diagrams of the internal circuits of the fuse boxes are provided. The connector configurations and colors are given.

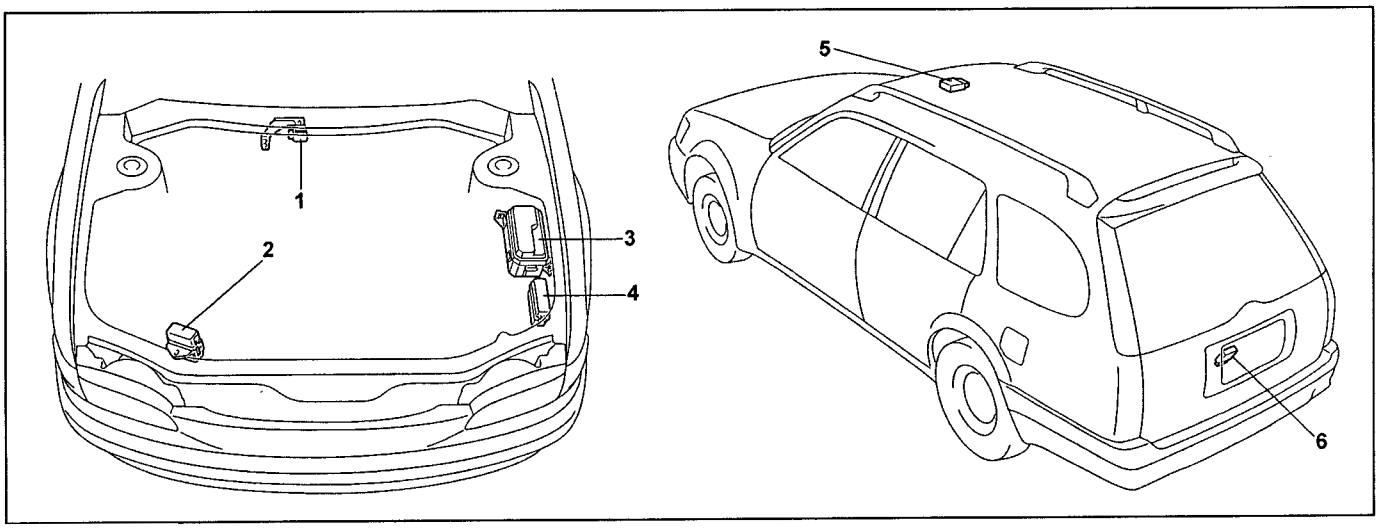

Component layout. 1 - ABS relay block, 2 - intake manifold absolute pressure sensor, 3 - fuse and relay block No. 2 (J/B No. 2), 4 - relay and fuse block No. 5 (R/B No. 5), 5 - sunroof control relay, 6 - rear hatch window washer relay. - Fuse-

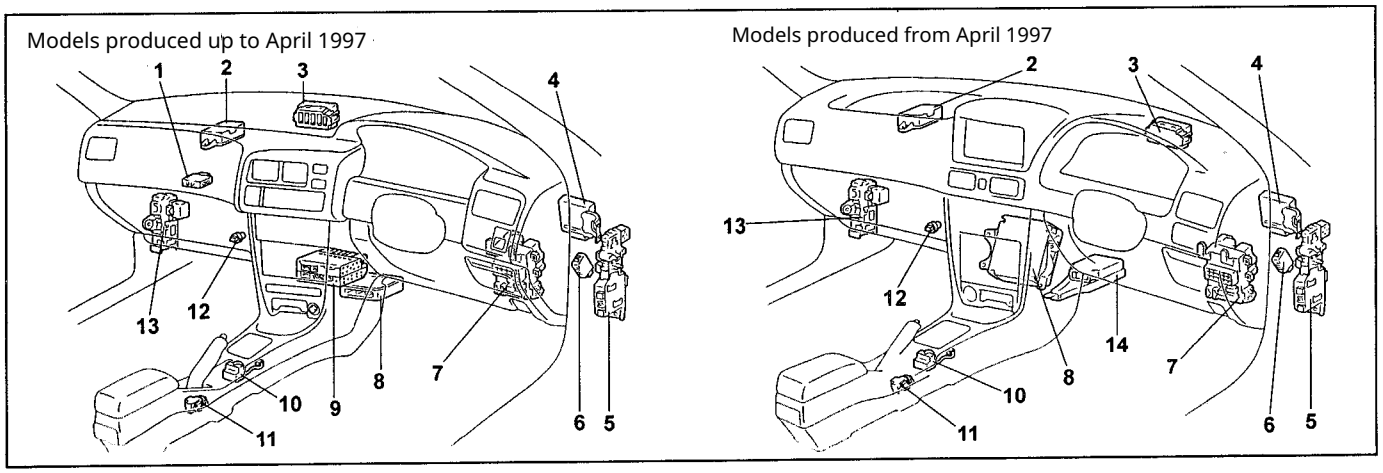

Location of components. 1 - Electronic control unit for the inter-axle differential lock, 2 - air conditioner amplifier, 3 - central junction block (J/B), 4 - ABS electronic control unit, 5 - driver-side junction block (J/B) and driver-side fuse/relay block (R/B), 6 - door lock control relay, 7 - instrument panel junction block (J/B), 8 - engine electronic control unit, 9 - stereo amplifier, 10 - shift unlock control relay, 11 - deceleration sensor, 12 - EX-NI relay, 13 - junction block No. 4 (J/B No. 4)

Instrument panel fuse/relay box (J/B)

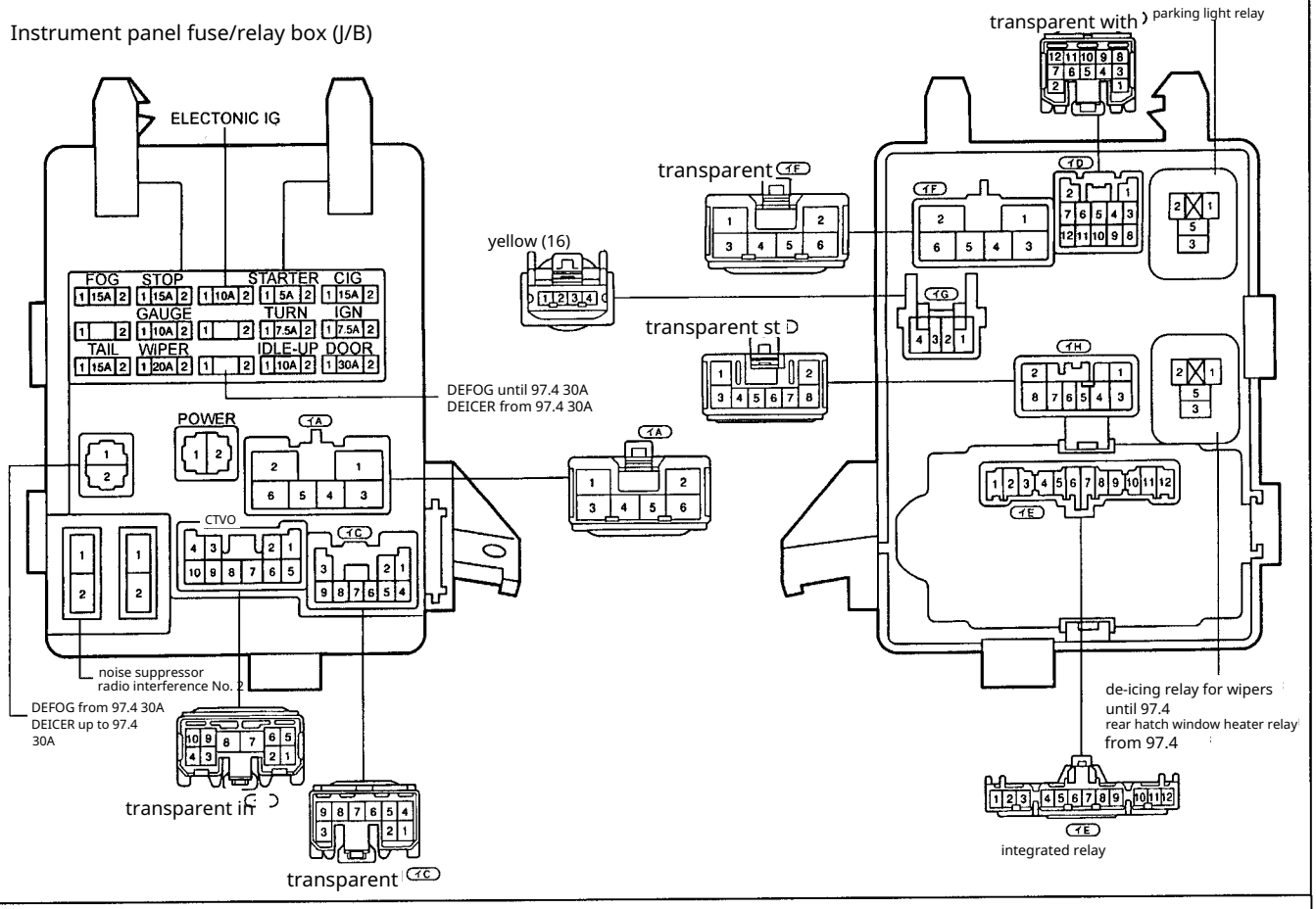

Internal circuits of the instrument panel fuse block (J/B)

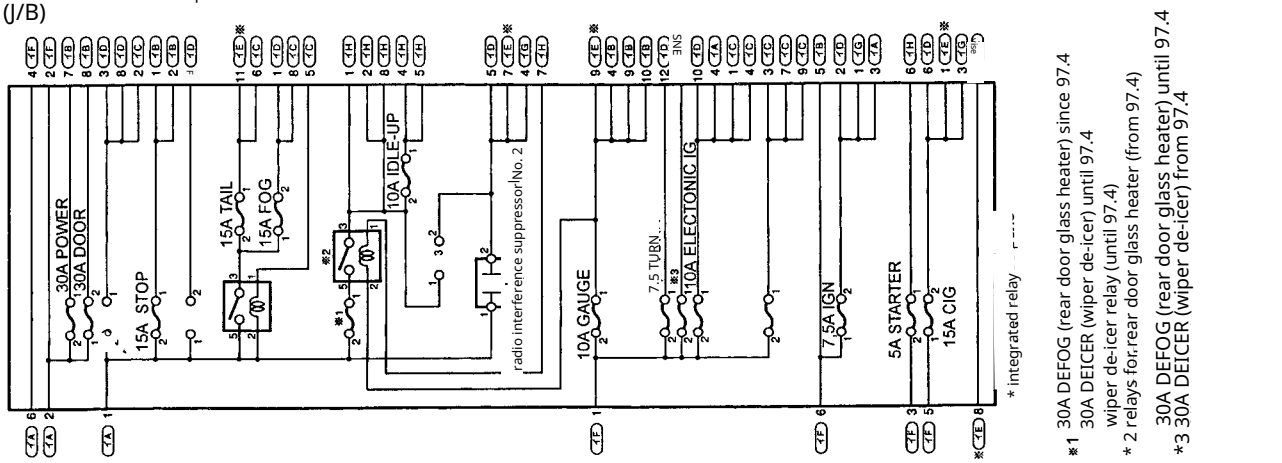

Instrument panel mounting block (J/B)

1	FOG (fog lights)	15A
2	STOP (stop lights)	15A
3	ELECTRONIC IG (ignition)	10A
4	STARTER (starter)	5A
5	CIG (cigarette lighter)	15A
6	—	
7	GAUGE (instruments)	10A
8	—	
9	TURN (turn signals and hazard warning)	7.5A
10	IGN (ignition)	7.5A
11	TAIL (parking lights)	15A
12	WIPER (windshield wipers and windshield washers)	20A
13	DEFOG (rear door glass heater) until 97.4 **DEICER** (wiper de-icer) from 97.4	30A
14	IDLE-UP (increase eng./at idle)	10A
15	DOOR (door locks)	30A
16	**POWER** (power windows, sunroof)	30A
17	radio interference suppressor No. 2	
18	—	
19	**DEFOG** (rear door glass heater) from 97.4 **DEICER** (wiper de-icer) until 97.4	30A
20	—	
21	wiper de-icer relay (until 97.4) rear door glass heater relay (from 97.4)	
22	integrated relay	
23	—	

Fuse box on the driver's side (J/B),
relay block on the driver's side (R/B),
right part of the engine compartment bulkhead

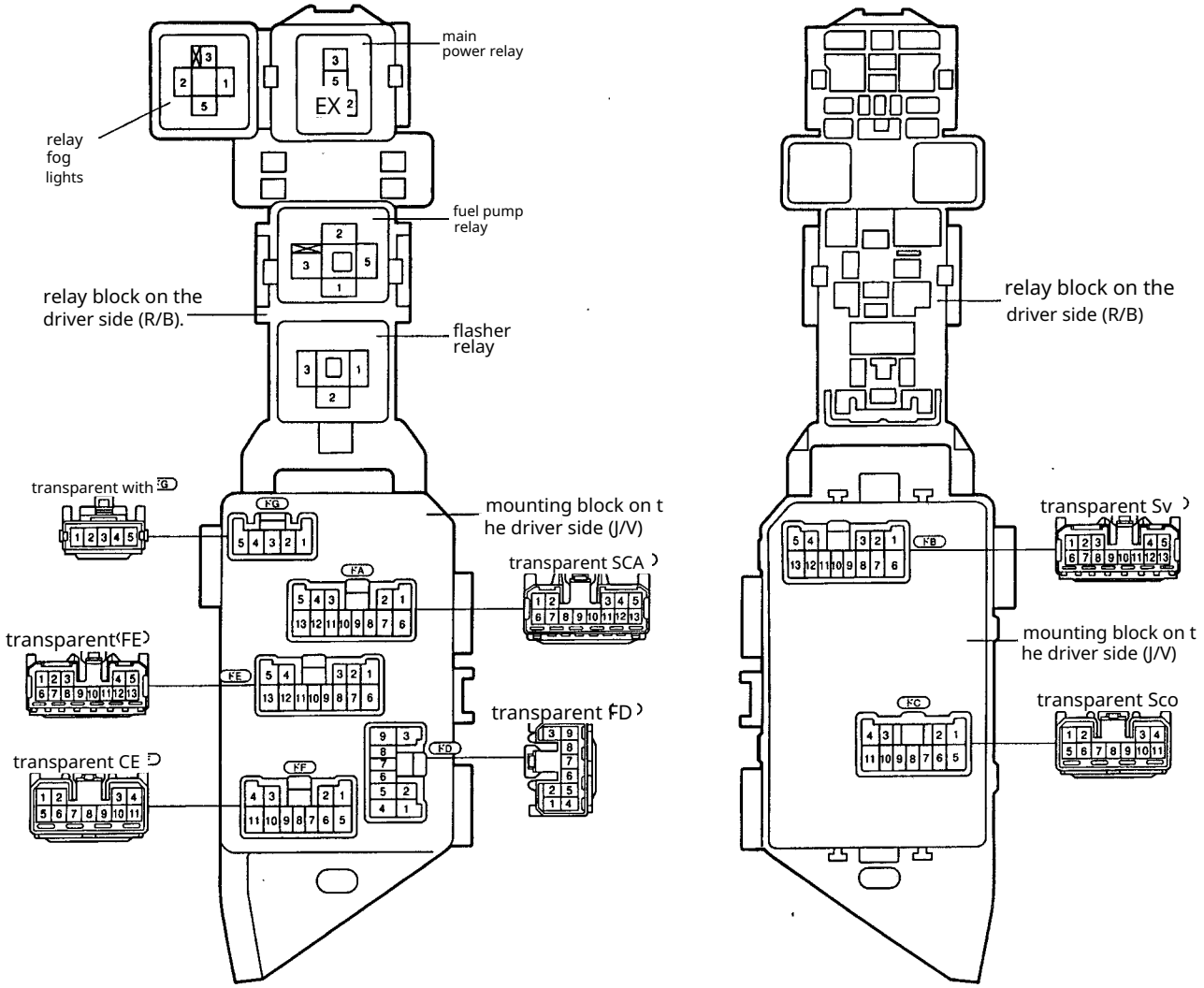

Internal circuits of the mounti
ng block on the driver side (J/B)

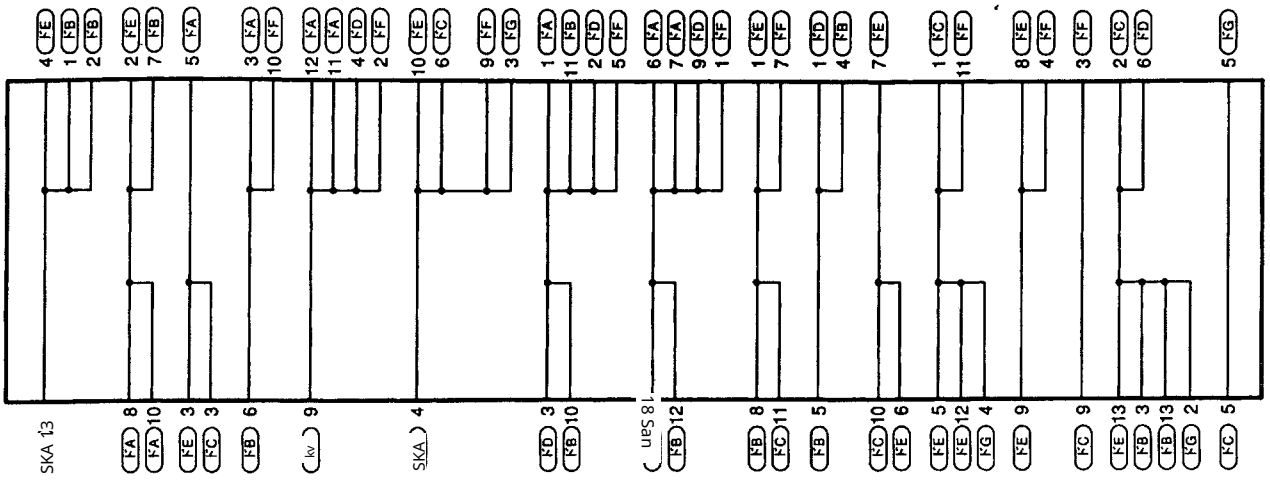

Fuse and relay box on the driver side (J/B), relay block on the driver side (R/B), right portion of the engine compartment partition

1	fog light relay
2	main power relay
3	fuse/relay block on driver side (R/B)
4	fuel pump relay
5	turn signal flasher relay turn signal
6	driver-side fuse/relay block (J/B)

Mounting Block No. 2 (J/F No. 2) and Fuse Block
(left side of the engine compartment)

1	headlight relay	
2	AM1	50A
3	starter relay	
4	main fuel injection system relay	
5	main engine relay	
6	horn relay	
7	Fan relay No.1	
8	IFAN	30A
9	fuse block	
10	AM1	40A
11	ALT	100A
12	ABS	50A

13	reserved fuse	
14	HEAD (LH)	10A
15	HEAD (RH)	10A
16	AM2	15A
17	HAZARD	10A
18	EFI	15A
19	DOME	15A
20	ALT-S	5A
21	Spare	
22	HORN	10A
23	FAN	5A

Fuse and Relay Box No. 2 (J/B No. 2)
and fuse block (left side of engine compartment)

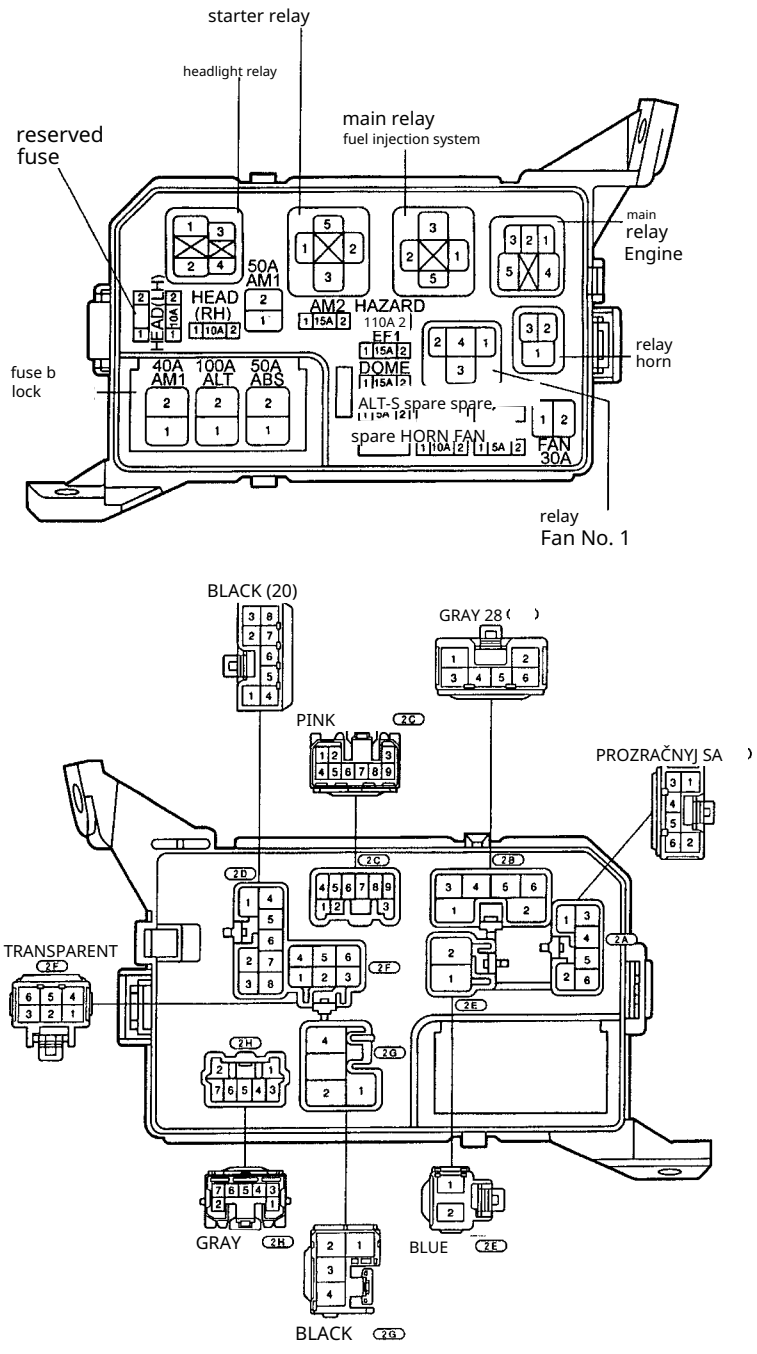

Internal circuits
of Fuse and Relay Box No. 2 (J/B No. 2)

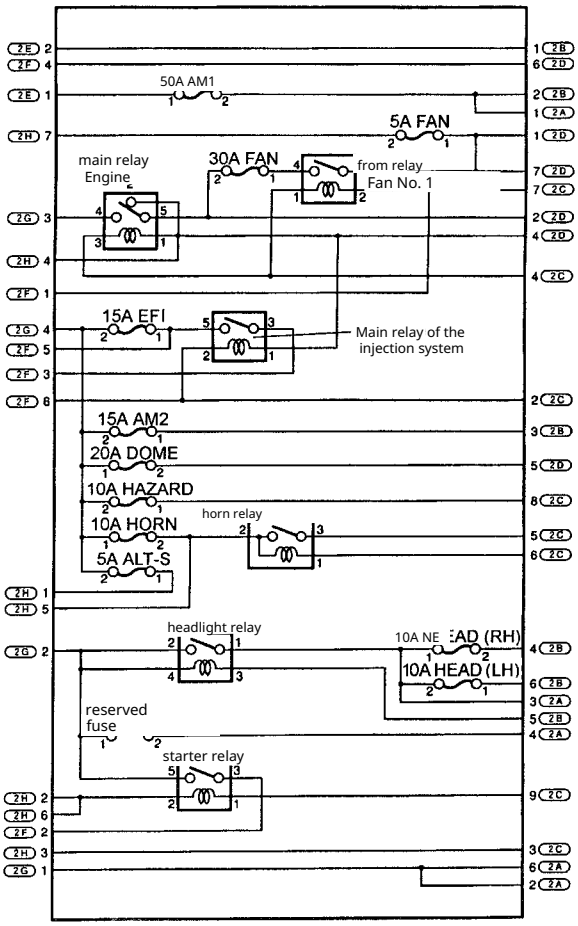

Central fuse box (J/B)
(central portion of the instrument panel)

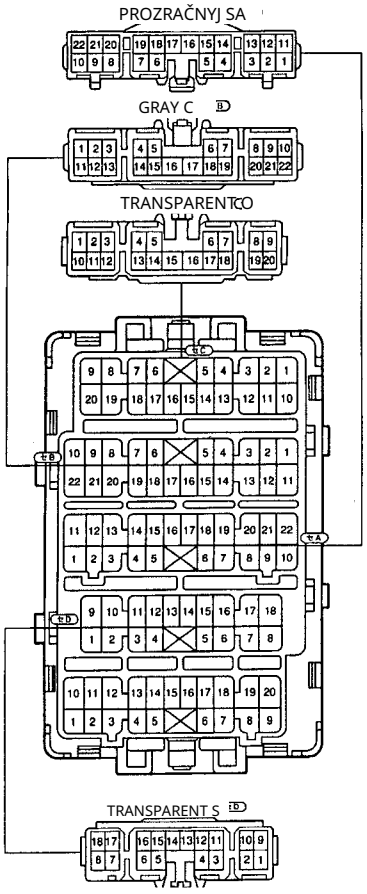

Central
fuse box (J/B)
internal circuits

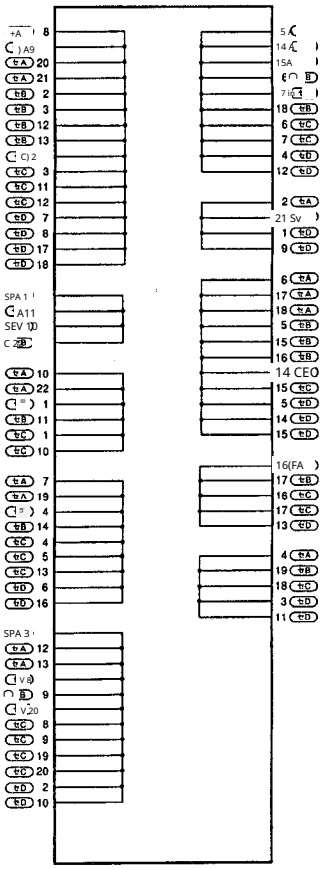

Fuse box No.4 (J/B No.4)
(left part of the engine compartment bulkhead)

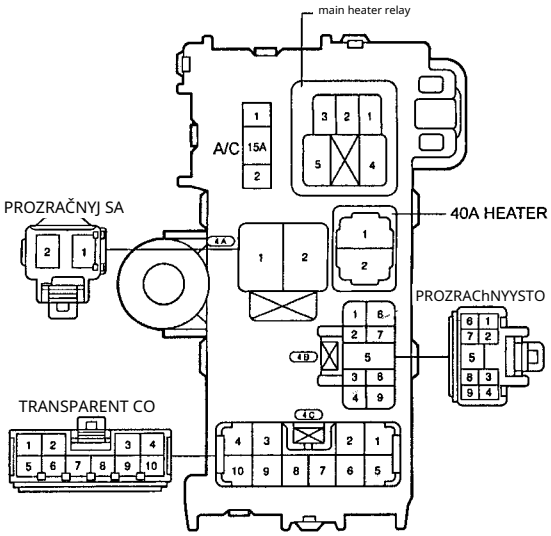

Junction Block No. 4 (J/B No. 4)
internal circuits

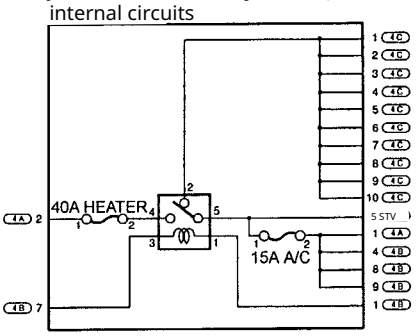

Fuse box No.4 (J/B No.4)
(left part of the engine comp
artment bulkhead)

1	A/C	15A
2	main heater relay	
3	HEATER	40A

Relay block No. 5 (R/B No. 5) (left part
of the engine compartment)

1	fan relay condenser No. 2	
2	fan relay condenser No. 3	
3	electromagnetic relay compressor clutch air conditioner	
4	CDS FAN	30A

ABS relay block (right side
of the engine compartment)

1	ABS electric pump relay (until 96.5)
2	solenoid valve relay ABS

Relay block No.5 (R/B No.5)
(left side of the engine compartment)

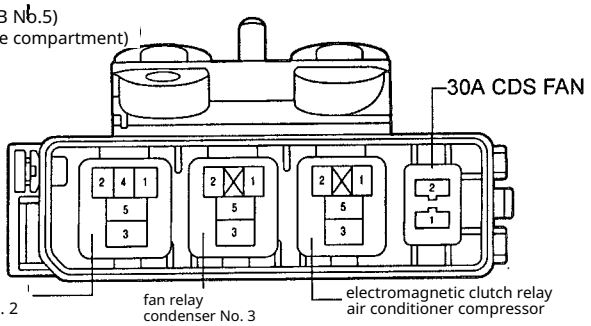

ABS relay block
(right side of the engine compartment)

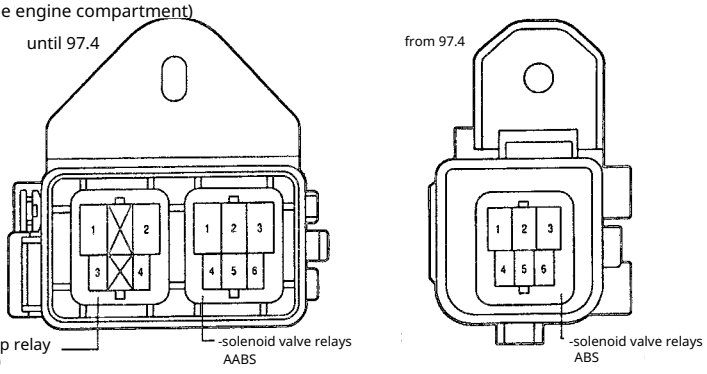

J/C (No.3, No.7, No.8, No.10) (until 97.4)

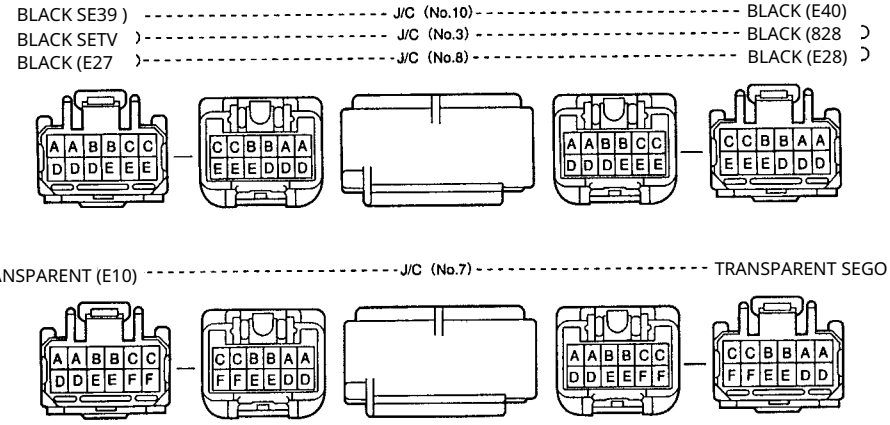

J/C (No.3, No.7, No.16, No.19, No.20) (c 97.4)

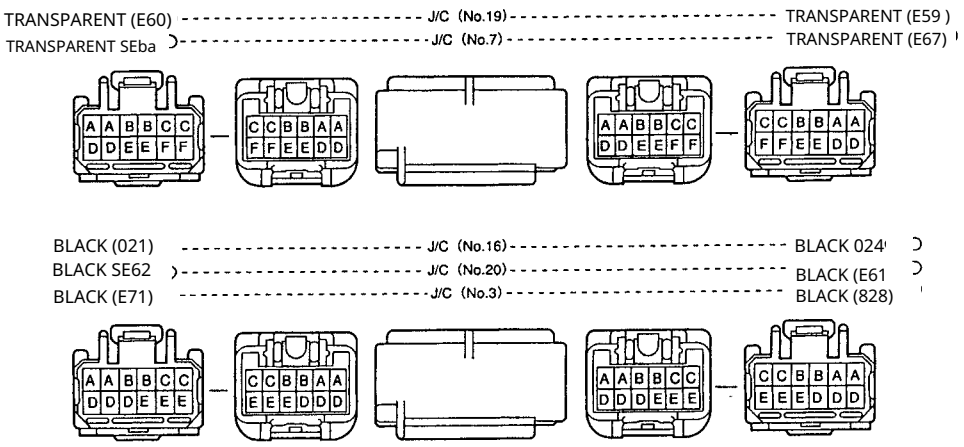

Internal circuits J/C (No.3, No.7, No.8, No.10) (until 97.4)

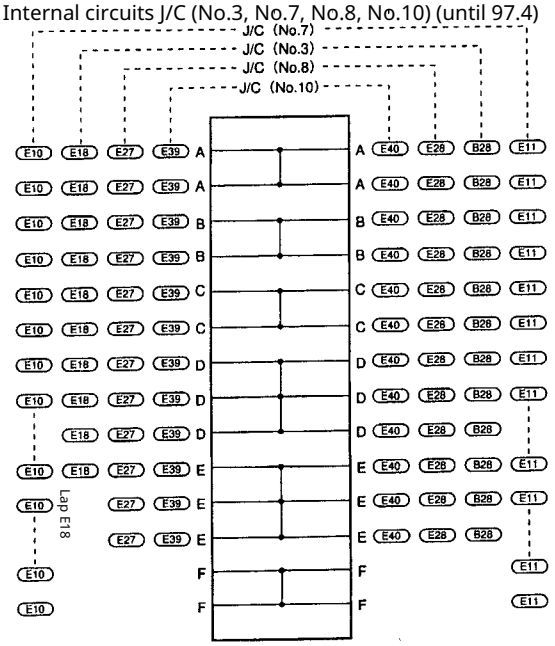

Internal circuits J/C (No.3, No.7, No.16, No.19, No.20) (from 97.4)

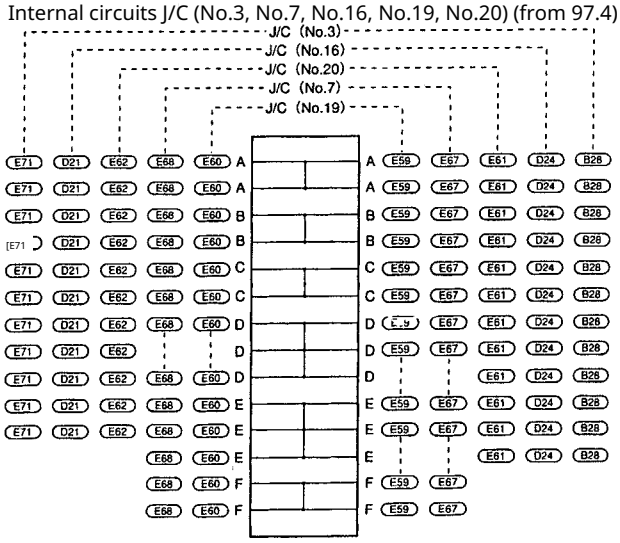

Wiring harness connection

transparent ADT

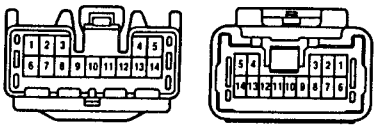

transparent AD2

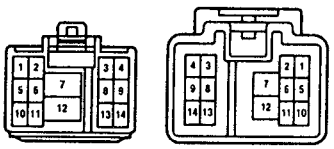

pink AET

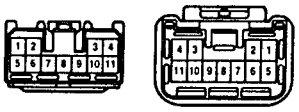

transparent B E3] (since 97.4)
black JE 2 (from 97.4)

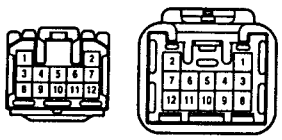

blue BE4 (from 97.4)

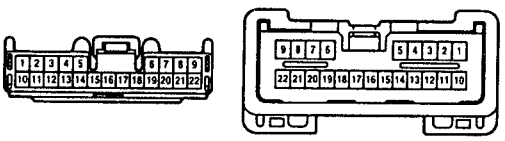

transparent [61] (until 97.4)

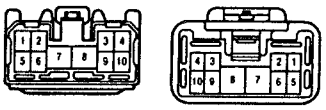

transparent E01 (until 97.4)

transparent [02] (until 97.4)

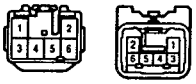

transparent FD1 (until 98.4)
transparent [3] (until 97.4)

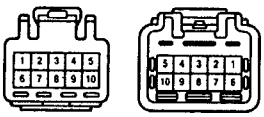

blue FD (since 98.4)

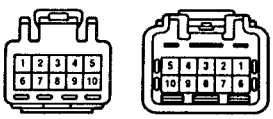

transparent GD2] (until 97.4)
transparent (BUT!

transparent GD 4 (since 97.4)
transparent JE 1 (since 97.4)

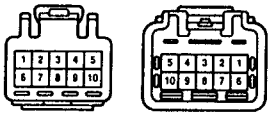

transparent 1D1

blue JD1]

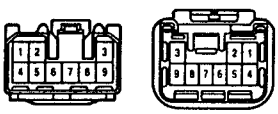

yellow AE2 (since 98.4)
yellow DE1] (since 98.4)

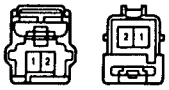

transparent BD1

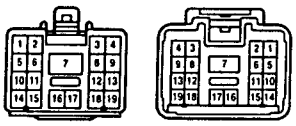

transparent PET (up to 96.5)
blue BE1 (from 96.5 to 97.4)

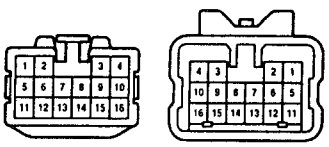

transparent BE 2 (until 97.4)
transparent E2

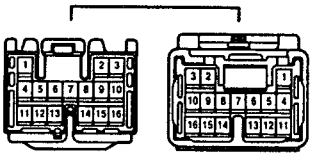

transparent ED3 (from 97.4)

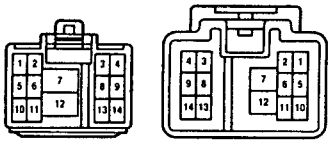

dark gray EJ1 (until 96.5)

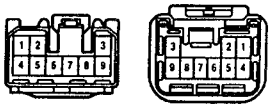

dark gray EV2 (from 96.5 to 97.4)

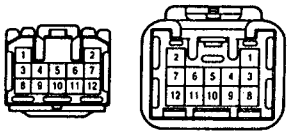

transparent F02 (until 96.5)
brown F02 (from 96.5)

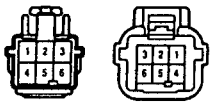

transparent FET (until 96.5)
gray 1 FE (from 96.5 to 97.4)

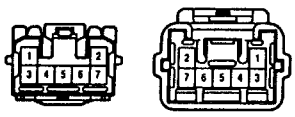

gray 2 FE (from 97.4)
gray GD3] (from 97.4)

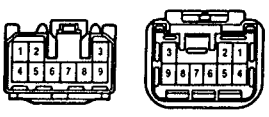

transparent GD1 (until 96.5)
gray GD1 (from 96.5 to 97.4)

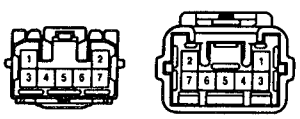

transparent KD1
transparent LM1] (up to 97.4)

transparent [LM2] (from 97.4)

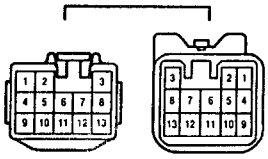

transparent LM2

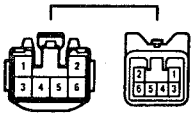

transparent LM3 (from 97.4)

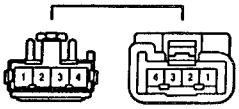

transparent NLE

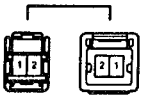

Connector identification

1. The contacts in the receptacle part of the connector are numbered from the upper left to the lower right corner.
2. The contacts in the plug part of the connector are numbered from the upper right to the lower left corner.

Note: When multiple connectors are used in a single assembly, the name of each connector (alphabet letter) and the contact number are indicated.

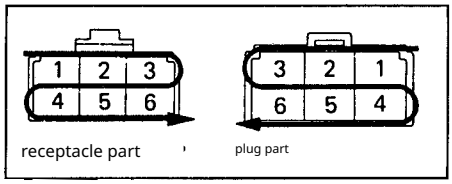

3. Unless otherwise stated, all connectors are shown with the latch facing upward. 2. The new bulb must have the same wattage as the old one. Removal of the headlamp and front WE power is shown with the latch facing upward.

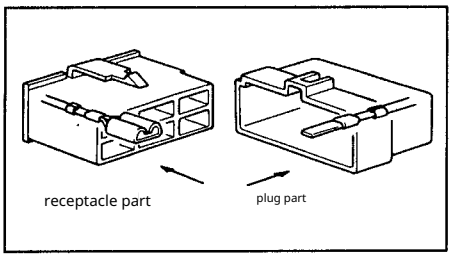

4. When disconnecting connectors, do not pull on the wires and be careful when disconnecting the retainer clips.

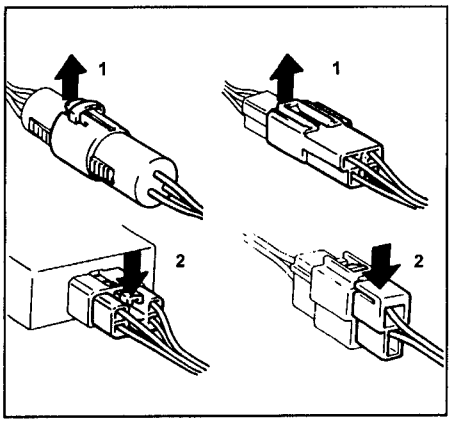

1 - release, 2 - press.

Ignition switch

Ignition switch inspection Check the ignition switch circuits at the various key positions. If the conductivity (the circuit conditions) does not match the values shown in the table, replace the ignition switch.

Switch Position	Conclusions
LOCK	no conductivity
ACC	AM1 - ACC
ON	AM1 - ACC - IG1, AM_2 -IG_2
START	AM_1 - IG_1, ST_1, AM2 - IG2, ST1

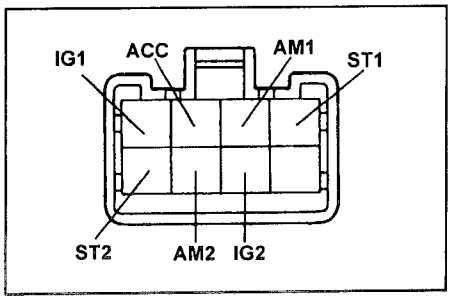

Headlights

Precautions when replacing bulbs

1. Do not hold the glass part of the bulb, as this shortens its service life.

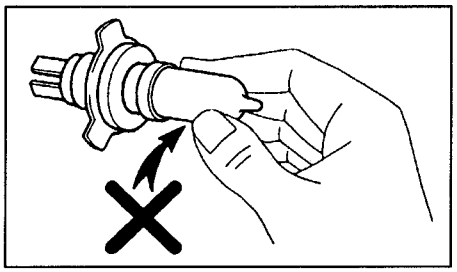

Headlight aim adjustment

1. Preliminary operations.
   a) Adjust the tire pressure. b) Seat one person in the driver's seat.
   c) The battery must be charged during adjustment.
2. Adjust the headlight position using the adjustment screws.

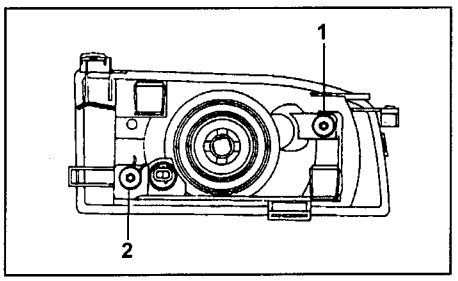

Sprinter Carib (up to May 1997). 1 - Horizontal adjustment screw, 2 Vertical adjustment screws.

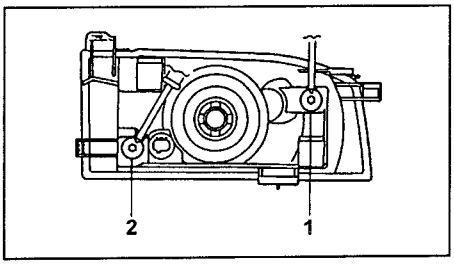

Sprinter Carib (from May 1997). 1 - Horizontal adjustment screw, 2 - Vertical adjustment screw.

direction.

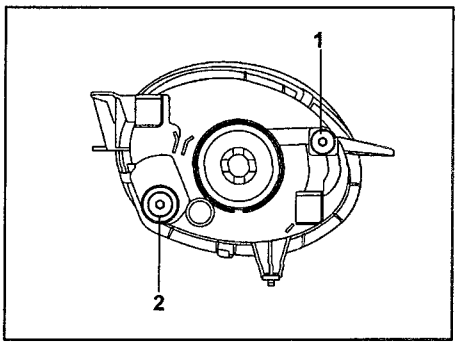

Sprinter Carib (Rosso trim). Horizontal adjustment screw, 2 Vertical adjustment screw.

turn signal indicator

1. Remove the radiator grille.
2. Removal of the front turn signal.
   a) Remove the clip.
   6) Pull the front turn signal toward the front of the vehicle and disconnect the two retainers.
   b) Disconnect the connector and remove the front turn signal.

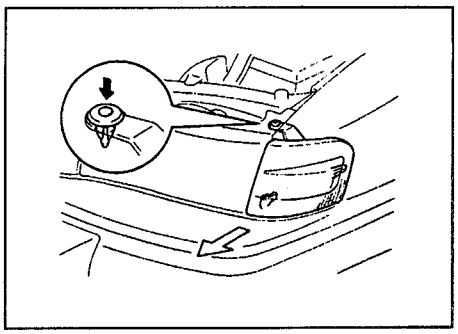

3. Removal of the headlight.
   a) Unscrew the two bolts, pull the headlight toward the front of the vehicle, and disconnect the retainer.
   c) Disconnect the connector and remove the headlight.

Note: Cover the bumper with a cloth to prevent damage when removing the headlight.

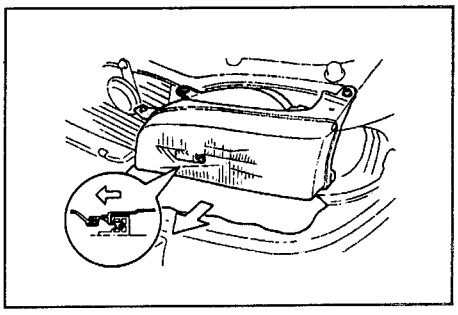

Installing the headlight and front turn signal

1. Install the headlight.
2. Install the front turn signal.
3. Install the radiator grille. 4. Check and adjust the headlight operation.

Fog lights

Removal

fog lights

1. Unscrew the nut.
2. Remove the fog lamp, as shown in the i llustration.

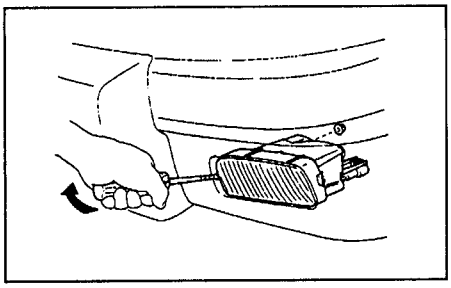

3. Disconnect the connector.

Installation

fog lights

1. Install the fog lamp. 2. Check and a djust the lamp's operation.

Inspection of components

lighting control system

Headlamp relay inspection

1. Check for continuous continuity betwe en terminals "1" and "2".

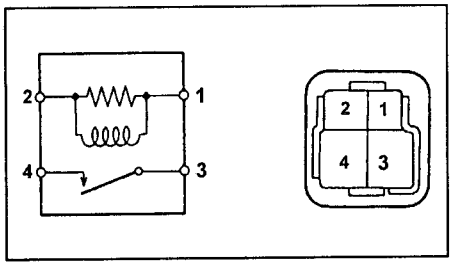

2. Check for continuity between terminals "3" and "4" when battery voltage is applied between terminals "1" and "2".

Tail light relay check

1. Check for continuous continuity bet ween terminals "1" and "2".

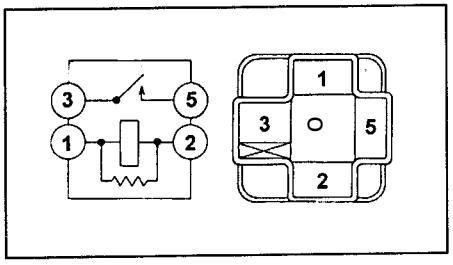

2. Check for continuity between terminals "3" and "5" when battery voltage is appli ed to terminals "1" and "2".

Relay inspection fog lights

1. Check for continuous conductivity betwee n terminals "1" and "2".

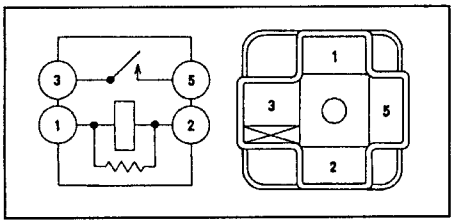

2. Check for continuity between termina ls "3" and "5" when battery voltage is a pplied to terminals "1" and "2".

Combination switch inspection

Inspection of the lighting contr ol switch

Switch position	Conclusions
OFF (off)	—
TAIL (parking lights)	EL - T
HEAD (headlights)	EL - T - H

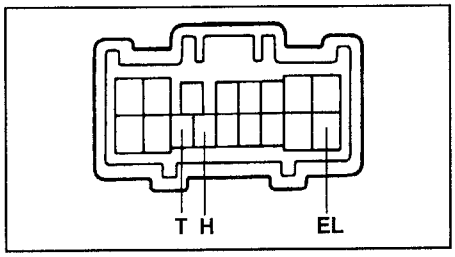

Checking the fog lamp switch

Check that there is continuity between ter minals "BFG" and "LFG" when the switch is i n the "ON" position; and also no continuity between terminals "BFG" and "LFG" when t he switch is in the "OFF" position.

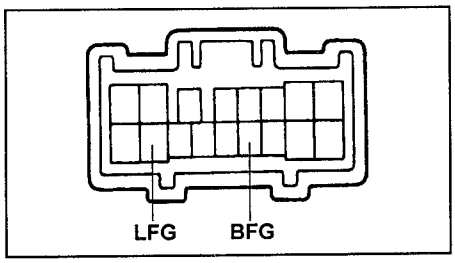

Check of the high/low be am switch

Switch Position	Conclusions
Flash (flash)	EL - HU - HF
Low beam (low)	EL - HL
High beam (high)	EL - HU

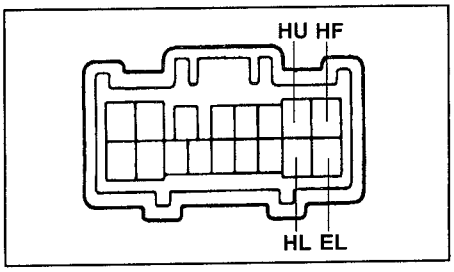

Inspection of the turn signal switch

Position Switch	Conclusions
Right turn	TB - TR
Center position	—
Left turn	TB - TL

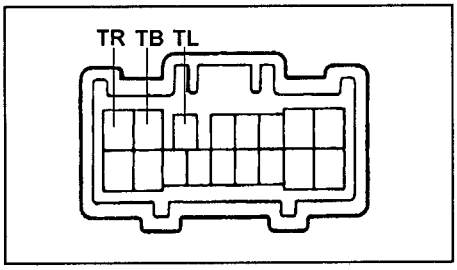

Inspection of the turn signal flas her relay

Output	Position switch	Result
B	Switch emergency alarm OFF → ON	0 B → more than 9 V
	Ignition key OFF → ON	0 V → more than 9 V
L	Ignition key to ON, turn signal left or right) OFF → ON	O B→>> 09 V
	Hazard warning switch OFF → ON	60–120 times per minute

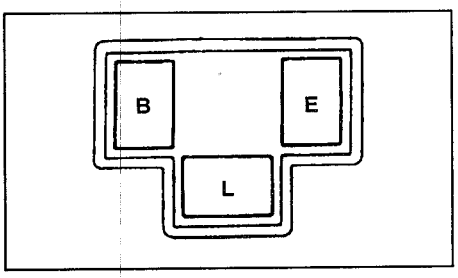

Check of the hazard warnin g switch

Check that there is c ontinuity between terminals "T" an d "E1" in any position of the switch.

Check that there is continuity be- tween terminals "B1" and "F" when the switch is in the "OFF" position.

Check that there is continuity between terminals "B2" and "F", and "TL", "TR", "TB", "R" when the switch is in the "ON" position.

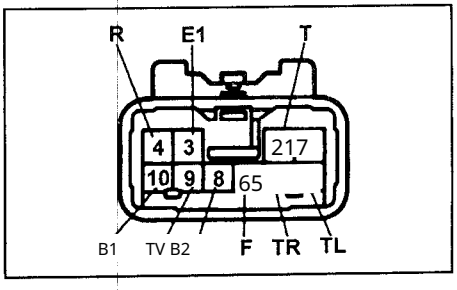

Inspection of the starter-int erlock switch and the automatic tra nsmission selector position senso r Check the conductivity between th e connector terminals at various sel ector positions.

Automatic transmission selector position	Conclusions
P	B-N and C-PL
R	C - RL
N	V - N and C-NL
D	C - DL
2	C - 2L
L	C - LL

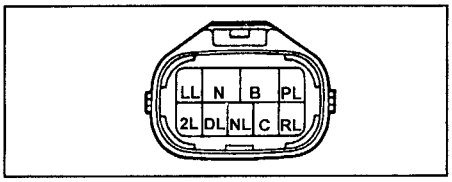

Check the reverse light switch (manual transmission). Check for continuity between terminals “1” and “2” when the switch ball is pressed.

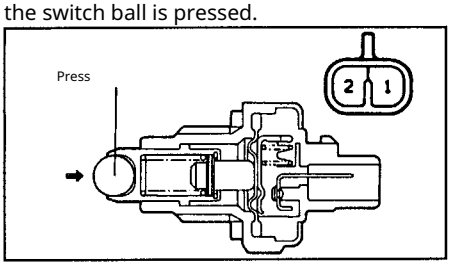

Checking limit switches

Check that when pressing the switch rod there i s no continuity between the connector terminal and the bracket.

And

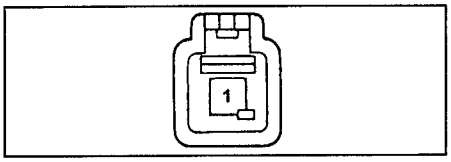

Checking the trunk latch switch

Trunk door switch Check that when t he lock latch is pressed there is no continu ity between terminals "1" and "2" of the co nnector.

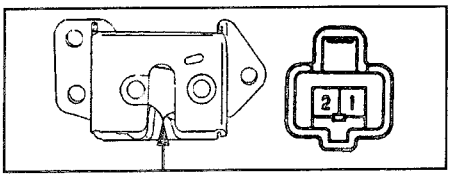

Switch inspection

Brake lights

Continuity between terminals "1" and "2" when the brake pedal is pressed.

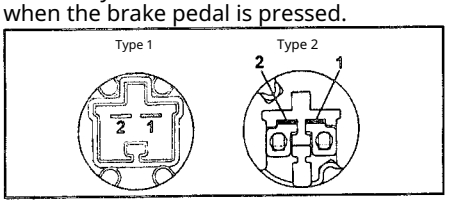

Check the upper brake light (on the spoiler). Connect th e battery’s “+” to terminal “1” and th e “-” to terminal “2” and verify that t he brake light illuminates. Note: ob serve the polarity when connecting the battery.

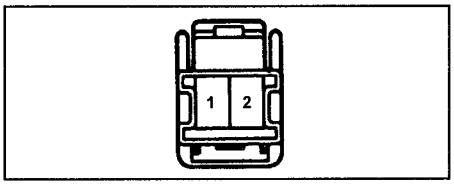

Check presence sensor

key in the ignition lock

Check the conductivity between the terminals “1” and “2” of the connector when the ignition lock is inserted in position B Switch with the key (button pressed) and the absence of conductivity with the key removed

control when the wiper switch button is not pressed).

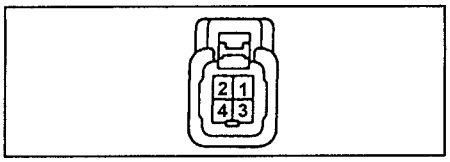

Inspection

integrated relay

Warning system for leaving the key in the ignition switch

1. Connect the battery "+" to terminal "3" and the battery "+" to terminal "7". Then c onnect the battery "-" to terminals "4" and "8" and check that the buzzer sounds.

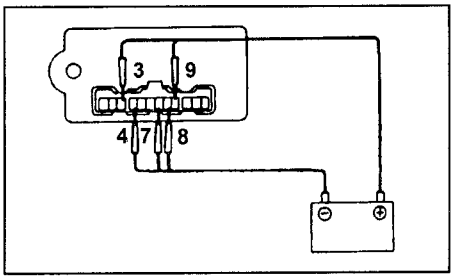

2. Check that the buzzer sound stops when: Disconnecting the wire from terminal "4" Disconnecting t he wire from terminal "8" Connecting the " +" of the battery to terminal "9". Warning s ystem for lights left on

1. Connect the battery to terminal "3"

Connect the "+" of the batt ery to terminal "7".

Also connect the "+" of the battery to termin al "11" and the battery to terminal "8" and ch eck that the buzzer sounds.

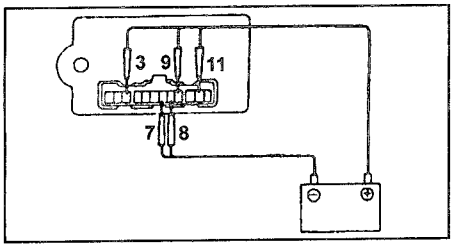

2. Verify that the buzzer sound stops wh en: The wire i s disconnected from terminal “11”. The wire is disconnected from terminal “8” . The battery’s “+” is connected to termi nal “9”. 3. Under th e conditions of item 1, connect the batte ry’s “+” to terminal “1” and verify that th e buzzer sound changes to intermittent.

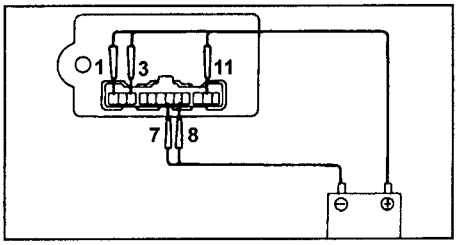

Inspection

wiper control switch

Check the conductivity between the switch terminals according to the table. Wit hout interval adjustment

Position switch	Connector Outputs
MIST	"+1" - "+B"
OFF	"+1" - "+S"
LO	"+1" - "+B"
HI	"+2" - "+B"

With interval adjustment

Switch position	Connector Outputs
OFF	"+1" - "+S"
INT	"+1" - "+S"
LO	"+1" - "+B"
HI	"+2" - "+B"

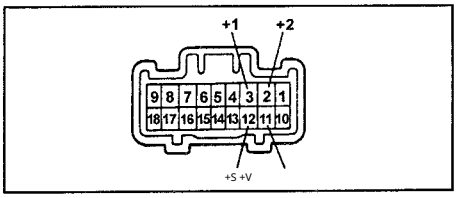

Check the operation of the windshield washer

windshield

1. Connect the voltmeter’s "+" terminal to terminal "+ 1" and the voltmeter’s "-" terminal to terminal "EW" . 2. Connect the battery’s "+" terminal to terminal "+B ", and the battery’s "-" terminals "EW" and "+S".

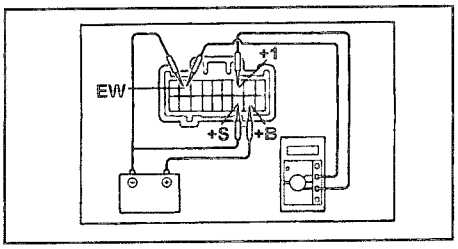

3. Switch the wiper to the INT position.

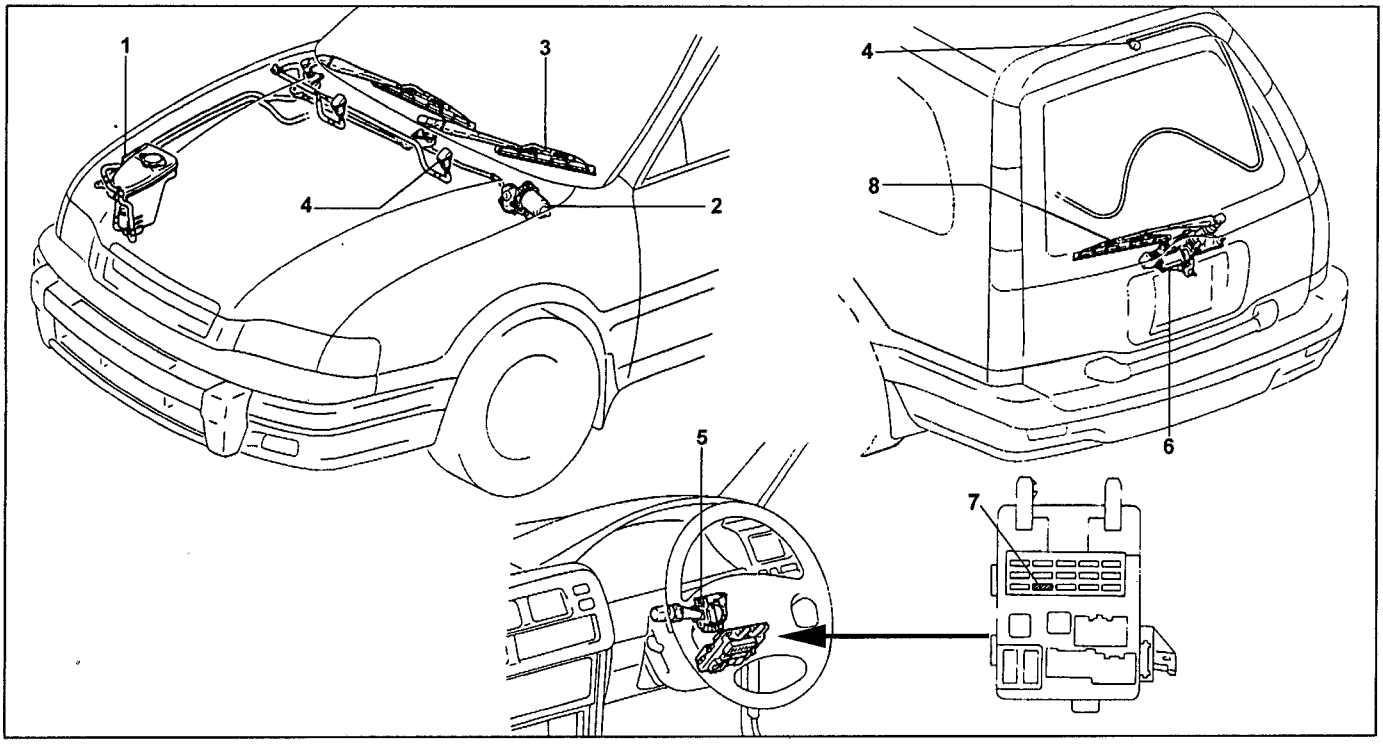

Windshield wiper and washer. 1 - washer reservoir, 2 - windshield wiper motor, 3 - wiper linkage and arm, 4 - nozzle, 5 - com
3 bination switch, 6 - rear hatch wiper motor relay, 7 - WIPER 20A fuse, 8 - rear hatch wiper linkage and arm.

4. For 5 seconds, apply the battery's "+" t o terminal "S+".

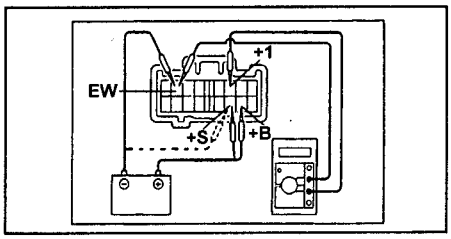

5. Connect the battery's "-" to terminal "+S" and check the change in voltage b etween terminals "+1" and "EW" while the wiper operates during interval adj ustment.

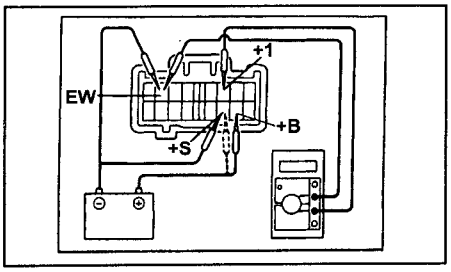

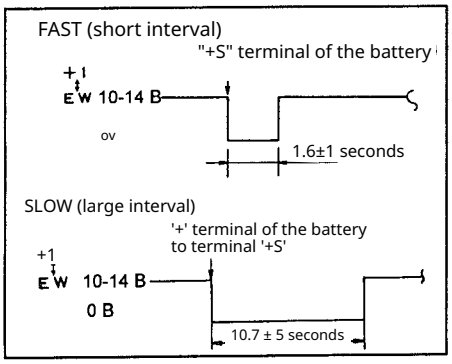

Operating diagram with an adjustable interval.

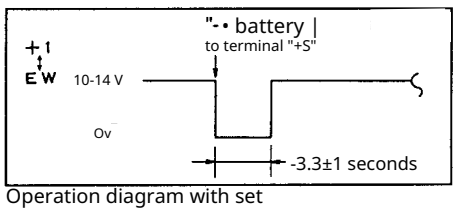

Operation diagram with set interval

Windshield wiper motor check 1. Lo w-speed operation check. Connect th e battery's "+" to terminal "+1" and the battery's "-" to terminal "-". At this mo ment the wiper motor should run at lo w speed.

2. High-speed operation check. Connect the battery's "+" to terminal "+2" and the battery' s "-" to terminal "-". At this moment the wiper motor

The calf must earn a lot speeds.

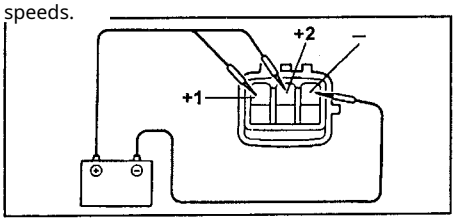

3. Checking the brushes' stop in the en d position (stop position). (a) Connect t he '+' of the battery to terminal '+1' a nd the battery negative to terminal '-' . The motor will run at low speed. (b) Remove the wire from the battery at terminal '+1'. The electric motor sh ould stop. (c) Short terminals '+1' and '+S'.

Connect the battery to terminal "B"; at this time the engine should start runni ng at low speed and then come to a sto p.

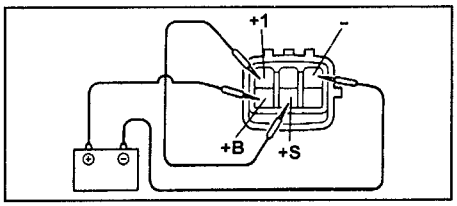

Note: the stop position is shown in the figure.

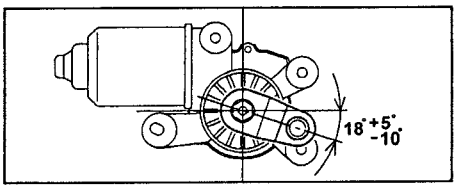

Check of the switch

windshield wiper

rear hatch door

1. Check the circuits at the various switch positi ons according to the table.

Position Switch	Conclusions
OFF	no conductivity
INT	"EW" and "C1R"
ON	"EW" and "+1R"

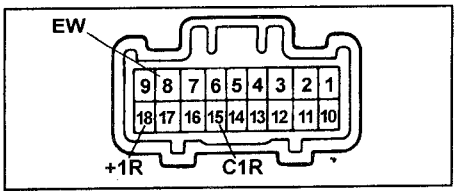

Rear door window wiper relay inspection

Colors: L - blue, Y - yellow, R - red 1. Check in the OFF position. Check for no continuity between terminals "R" and "L", and for continuity between terminals "Y" and "R".

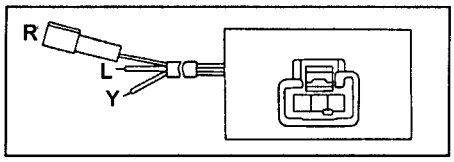

2. Check in the ON position. Connect the battery "+" to terminal "+B", and the battery negative to terminal "Ls". After that, check for continuity between terminals "R" and "L", and for no continuity between terminals "Y" and "R".

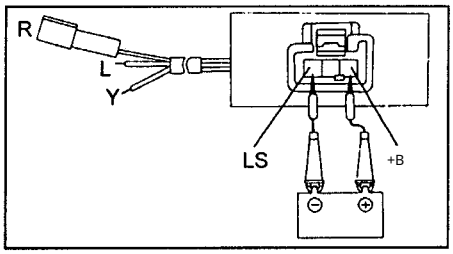

3. Check the intermittent interval adjustment mode (INT).

a) Set the voltmeter to the DC (direct current) range. Connect the voltmeter's "+" to terminal "R" and the voltmeter's "–" to terminal "C1". b) Connect the battery's "+" to terminal "+B" and the battery's "–" to terminal "C1" (relay ON).

The voltage between terminals "R" and "C1" is about 12 V.

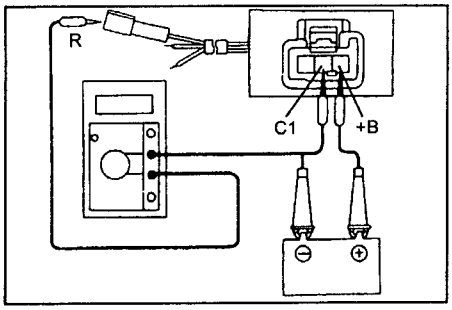

b) From the position indicated in paragraph (b), connect and short the "Y" and "L" terminals for 5 seconds. The relay should switch from the "ON" position to the "OFF" position.

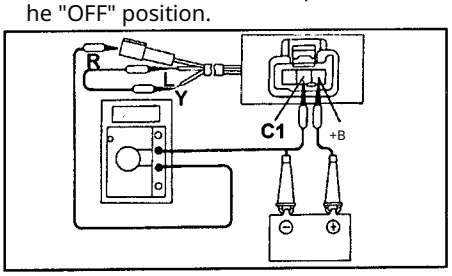

c) When removing the jumper from the "Y" and "L" terminals, check that the voltage between terminals "R" and "C1" changes (less than 1 V when the jumper is removed and 12 V after 9–15 seconds).

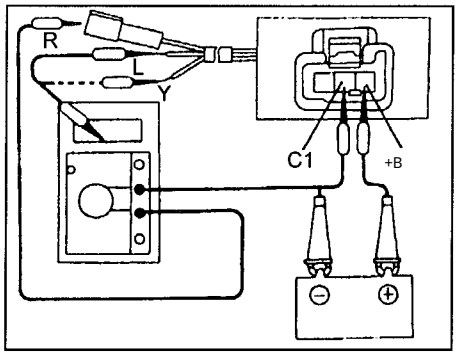

Rear door window wiper motor inspection

1. In the "ON" position. Disconnect terminal "R". Connect the battery positive (+) to terminal "R" and the battery negative (-) to "ground", and check that the electric motor is running.

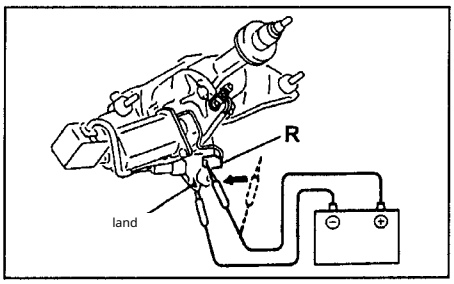

2. In the OFF position.

a) Connect the "+" terminal of the battery to terminal "R" and the "-" terminal of the battery to "ground". The electric motor should run.

b) Disconnect the "+" terminal of the battery from terminal "R". The electric motor should stop.

stop.

c) Short terminals "R" and "Y", connect the "+" of the battery to terminal "L". The motor will start and stop in the automatic stop position.

in the automatic stop position.

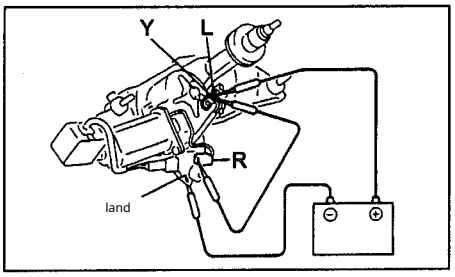

Windshield and rear hatch glass washer switch inspection

1. Check continuity. Rear hatch glass washer

Switch position	Conclusions
ON (OFF)*	EW - WR
OFF	no continuity
ON (ON)*	EW-WR-+1R

* in parentheses - position of the windshield washer switch

Windshield washer

Switch position	Conclusions
OFF	no conductivity
ON	W - EW

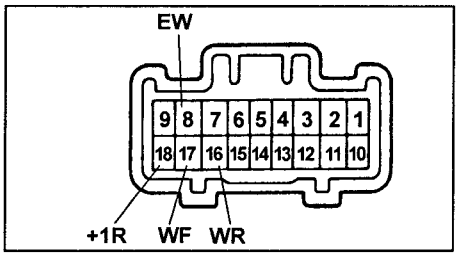

2. Checking the operation of the windshield washer of the glass.

a) Set the windshield wiper switch to the OFF position.

b) Connect the "+" of the battery to "+V", the "-" to the "+S" and "EW" terminals. c) Connect the "+" of the tester to the "+1" terminal, and the "-" of the tester to the "EW" terminal.

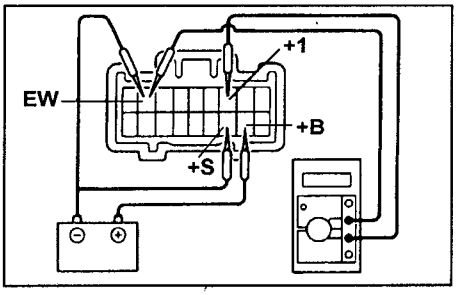

d) Verify that the voltage between terminals "+1" and "EW" changes according to the figure when the wiper switch is in the ON or OFF position.

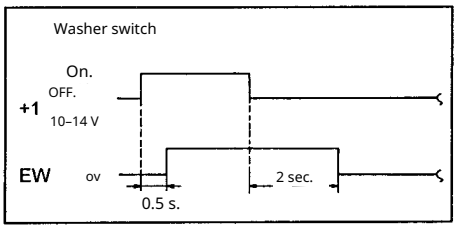

Washer motor inspection (windshield or rear hatch glass)

1. Immerse the washer motor in a reservoir of water.
2. Connect the battery's "+" terminal to terminal "B" of the electric motor, connect the "-" terminal to terminal "F", and make sure that water flows from the nozzle into the windshield washer.
3. Connect the "+" of the battery to terminal "B" of the electric motor, the "-" to terminal "R", and ensure that water flows out of the nozzle (to the rear window washer).

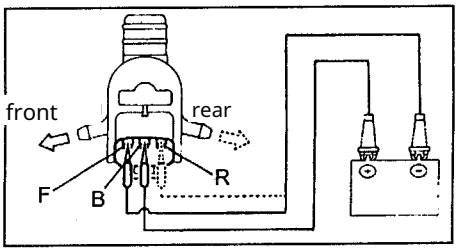

Instrument cluster

Check

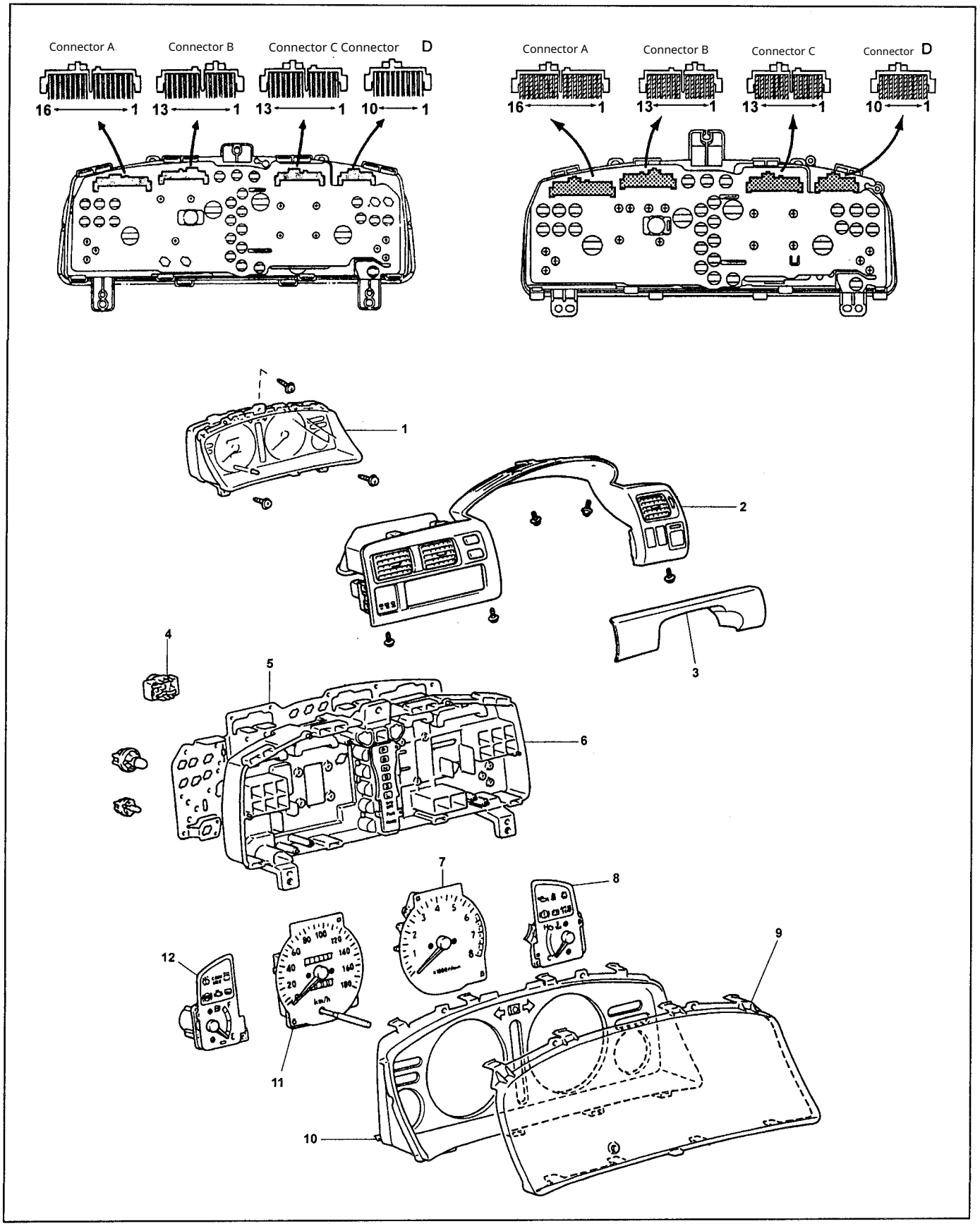

Instrument cluster. 1 - instrument cluster, 2 - upper trim of the center console and upper trim of the instrument cluster, 3 - lower trim of the instrument cluster, 4 - reverse travel warning buzzer, 5 - instrument cluster circuit board, 6 - housing, 7 - tachometer, 8 - coolant temperature gauge and indicators, 9 - glass, 10 - instrument cluster panel, 11 - speedometer, 12 - fuel level gauge and indicators.

Inspection speedometer readings

1. Connect the tester and compare the tester readings with the speedometer.

Readings speedometer (km/h)	Permissible range (km/h)
40	36-46
60	54-69
80	72-92
100	90-115
120	108-138
140	126-161
160	144-184

Sensor Check

speedometer

1. Operation check.
   a) Remove the speed sensor.
   6) Connect the battery terminals to terminals "1" (+) and "2" (-).
   c) Slowly rotate the shaft and confirm the presence of voltage between terminals "2" and "3".

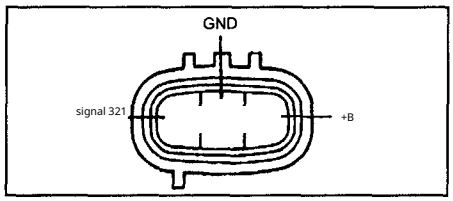

g) Check that during one rotation of the sensor shaft the voltage changes 4 times (appears and disappears). If the operation differs from the description, replace the sensor.

Inspection speedometer sensor (inside the instrument cluster)

Note: the check is performed with the ignition on and the connector connected.

1. Operation check.
   a) Disconnect the speed sensor.
   b) Slowly rotate the shaft and make sure voltage is present between the terminals according to the table. c) Check that during one rotation of the sensor shaft the voltage changes 4 times (appears and disappears).

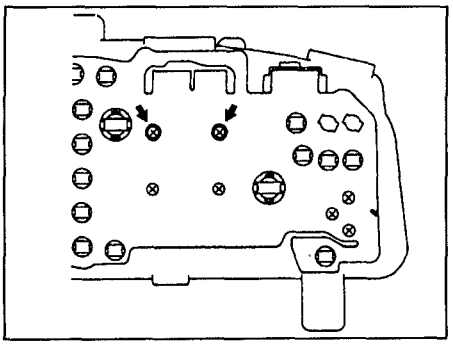

Tachometer check

1. Connect a calibration tachometer and start the engine.

Note: reversing the polarity when connecting the tachometer will cause transistors and diodes to fail.

2. Compare the readings of the calibrated and the standard tachometers.

Readings tachometer (rpm)	Permissible range (rpm)
700	630 - 770
1000	900-1100
2000	1850-2150
3000	2800 - 3200
4000	3800-4200
5000	4800 - 5200
6000	5750-6250

If the error exceeds the allowable level, replace the tachometer.

Gauge check Coolant temperature sensor 1. Function check.

a) Disconnect the connector of the coolant temperature gauge sensor.

b) Turn on the ignition and make sure the pointer is in the "C" position. c) From the position indicated in item (b), short the connector terminal to "ground". Make sure the pointer has moved to the "H" position.

2. Check the resistance between the sensor indicator terminals. Resistance between terminals: IG "+" - U ≈ 54 Ω IG "+" - E ≈ 176 Ω U - E..... = 230 Ω

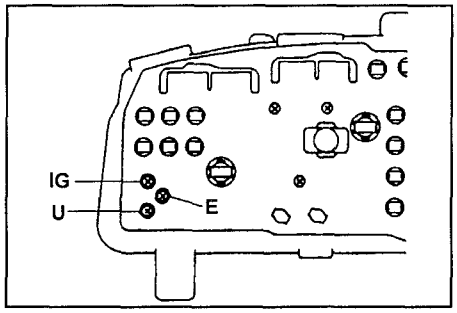

Coolant temperature sensor check Check the resistance between the sensor terminal and the housing at different temperatures.

Temperature, °C	Resistance, Ω
50	160 - 240
120	17 - 21

Fuel level gauge check

1. Measurements during operation.
   a) Disconnect the sensor connector (remove the connectors from both sensors).
   b) Turn on the ignition and make sure that the needle is in the "E" position.
   c) From the position indicated in item (b), short terminals "1" and "2" of the connector on the harness side. Make sure the needle moves to the "F" position.

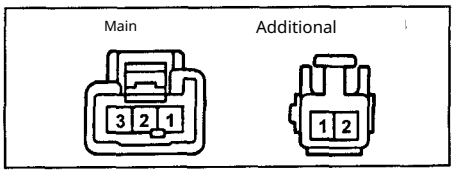

2. Resistance check.

Resistance between terminals:

IG + - U. ..... = 144 Ω
IG + - E ..... ≈ 264 Ω
U - E. ..... ≈ 119 Ω

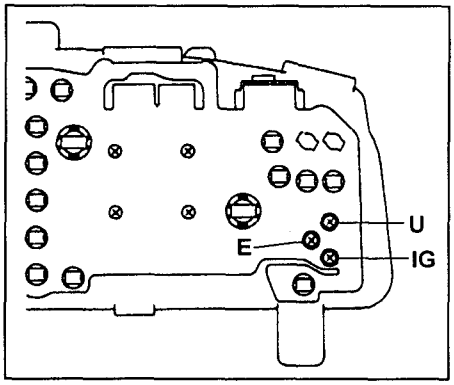

Fuel level sensor check

1. Resistance check.
   a) Remove the fuel level sensor and make sure the float moves smoothly.
   b) Measure the resistance between terminals "2" and "1" ("ground") while moving the float from "E" to "F". Ensure that the resistance changes smoothly.

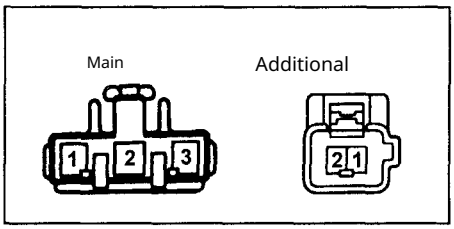

Main

Float position	Resistance	
F	28.4 ± 3 mm	2±1 Ω
E	51.8 ± 3 mm	45±1 Ω

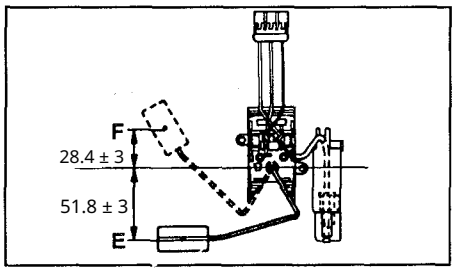

Additional

Float position	Resistance	
F	17±3 mm	2±1 Ω
1/2	75.7±3	53±1 Ω
E	111.6±3 mm	61.9±1 Ω

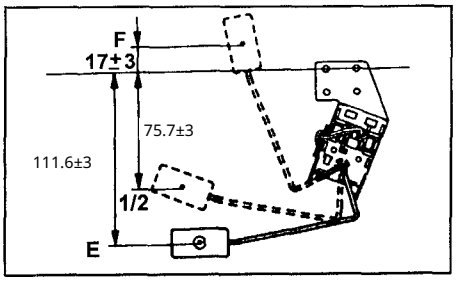

Checking the Low Fuel Level Sensor

1. Sensor inspection.
a) Remove the fuel level sensor (main).
b) Turn on the ignition and make sure that when the sensor is lowered into the gasoline the indicator does not light.

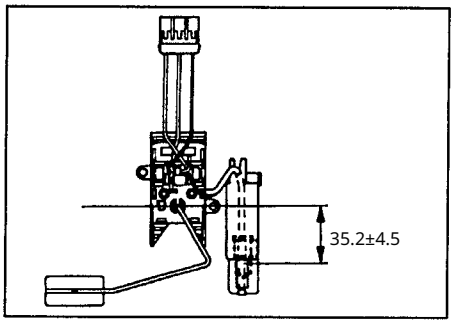

Seat Belt Reminder Indicator Check

1. Turn the ignition on and confirm that the seat belt reminder indicator lights up (when the seat belt is unfastened) and does not light (when the seat belt is fastened). 2. Disconnect the connector of the seat belt reminder indicator sensor.
security.
3. Turn on the ignition and short-circuit the connector on the wiring harness side and make sure the indicator lights up.

Seat belt unfastened sensor check

Disconnect the connector and check conductivity between the sensor connector pins.
between the sensor connector pins. Seat belt

not fastened... there is continuity
fastened.....no continuity

Oil pressure warning indicator check 1. Circuit check.

a) Turn on the ignition and make sure that the indicator lights. Start the engine and make sure that the indicator goes out.
b) Disconnect the sensor connector.
c) Turn on the ignition and make sure that the indicator lights when the wiring harness connector is grounded.

Sensor Check

Oil pressure warning 1. Check for continuity between the terminal and ground with the engine off.

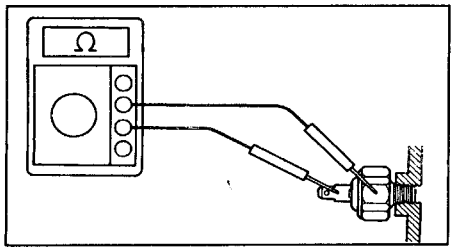

2. Check for no continuity between the terminal and ground with the engine running.

Brake System Indicator Check

1. Circuit inspection.
a) Disconnect the parking brake sensor switch connector.
b) Turn on the ignition.
c) Ground the connector terminal on the side of the parking brake switch harness and make sure the indicator lights up.

g) Disconnect the low brake fluid level sensor connector. d) Turn on the ignition.
e) Short the connector terminals on the wiring harness side of the low brake fluid level sensor and ensure the indicator lights up. Parking brake switch check. Check the conductivity between terminal "1" of the sensor connector and ground. Plunger pressed..... .. no continuity

Plunger not pressed... continuity present. Low brake fluid level sensor check. 1. Disconnect the low brake fluid level sensor connector and connect a tester.

2. Pump out the brake fluid with a syringe and check the conductivity during this process.

Float at the top... no continuity. Float at the bottom.... continuity present

Checking the trunk latch switch
of the switch

Front and rear doors. Check the conductivity between the terminal of each connector and ground.
Switch

pressed ..... no continuity
not pressed ..... there is continuity

Tailgate
Check for no continuity between the connector terminals when the lock latch is depressed.

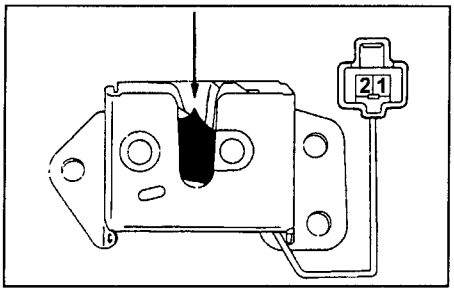

Automatic transmission selector position indicator check

Note: the check is performed with the ignition key in the ON position and the automatic transmission selector in "P".
1. Disconnect the selector connector of the automatic transmission.
2. Turn on the ignition, short the terminals on the harness side and verify that the corresponding indicator on the instrument cluster lights.
Note: verify that when the automatic transmission selector is shifted to "R" the corresponding indicator on the instrument cluster lights and the buzzer sound is heard.

Contacts to be shorted	The indicator is lit on the instrument cluster combination
1 - 6	P
5 - 6	R
7 - 6	N
8 - 6	D
9 - 6	2
4 - 6	L

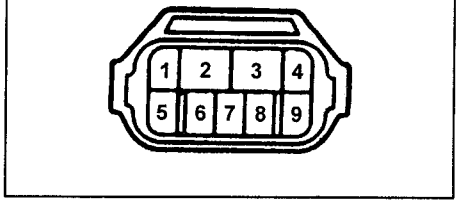

Indicator check and of the buzzer when reversing

1. Verify that when shifted the corresponding selector indicator lights in position "R" on the instrument cluster and the buzzer sound is heard.

Up-shift indicator check 1. Disconnect the connector from the up-shift switch. 2. Short terminals 2 and 4 of the connector and check the indicator condition.

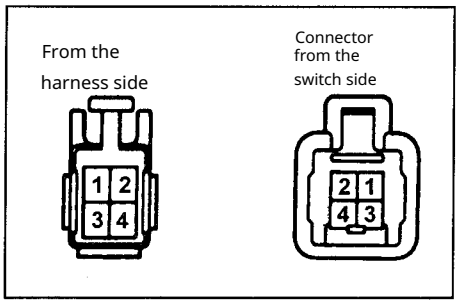

Check of the overdrive switch

See the chapter "Automatic transmission".

Checking the automatic transmission operation mode indicator
1. Disconnect the switch connector. 2. Connect the battery's "+" terminal to terminal "2" on the wiring harness side and verify that the "PWR" indicator is illuminated.

3. Connect the "+" terminal of the battery to terminal "5" on the harness side of the wires and check that the indicator light is on кагор "MANU".

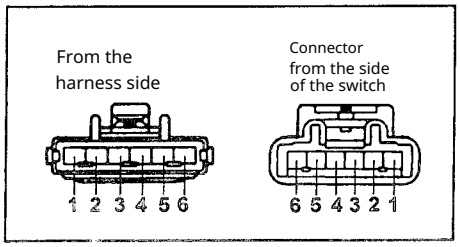

Checking the transmission fluid overheat sensor (automatic transmission, 4WD)

Check that the conductivity between the terminals changes as shown in the illustration.

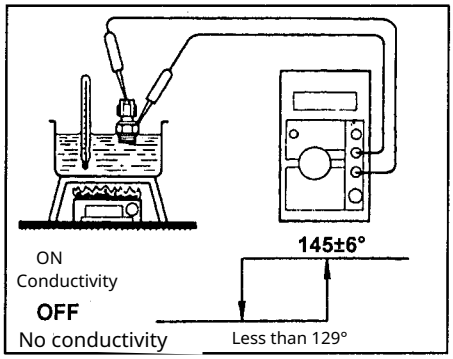

Checking the inter-axle differential lock switch (4WD)

1. Disconnect the connector from the switch.

Models with manual transmission

2. Turn the ignition on, connect terminal "5" on the harness side to "ground", and check that the indicator lights up.

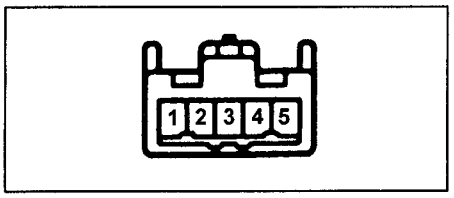

Models with automatic transmission

3. Turn the ignition on, connect terminal "1" on the harness side to "ground", and check that the indicator lights up.

Rear-window heater and wiper de-icer

Checking the wiper de-icer switch

1. Check for constant continuity between terminals "1" and "3" of the switch connector (illumination circuit).

2. Check for absence of conductivity between terminals "4" and "6" when the switch is not pressed, and the presence of conductivity between terminals "4" and "6" when the switch is pressed.

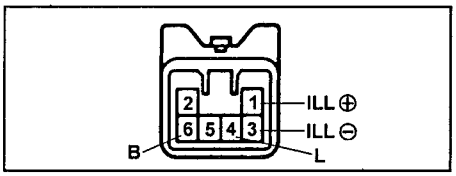

Checking the heater relay and wiper de-icer relay

1. Check for constant continuity between terminals "1" and "2" of the relay.

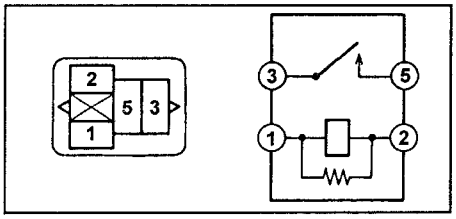

2. Check for continuity between terminals "1" and "2" of the relay when battery voltage is supplied between terminals "3" and "5". If the continuity does not match the description, replace the relay.

Inspection and repair of the rear hatch glass heater wires

Note:

- When cleaning the glass, use a soft, dry cloth and wipe the glass parallel to the heater wires. Try not to damage the wires.
- Do not use detergents or compounds containing abrasive particles.
- When measuring voltage, connect the negative probe of the tester with foil and press the edge of the foil against the wire with your finger.

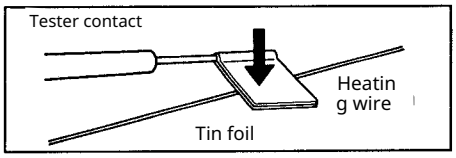

1. Check for open circuits in the wiring.
a) Turn on the ignition and the rear window defogger.
b) Measure the voltage at the center of each thermocouple wire, as shown in the illustration.

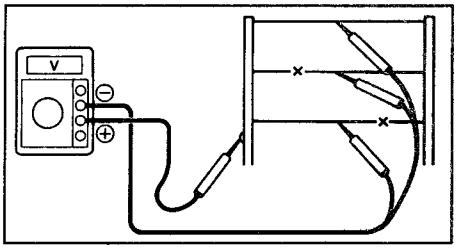

c) If the voltage is about 5 V, the wire is normal.
d) If the voltage is about 10 V, there is a break in the wire between the center and the side rail (+) of the thermoelement.
e) If the voltage is about 0 V, there is a break in the wire between the center and "ground". 2. Locating the break in the wire. a) Connect the voltmeter "positive" to the side rail (+) of the thermoelement. b) Wrap the voltmeter "negative" with foil. Connect the foil to the thermoelement wire at the side rail (+) and slowly move it toward the opposite end (to "ground"). c) The point at which the voltmeter needle deflects from zero by a few volts is the break point.

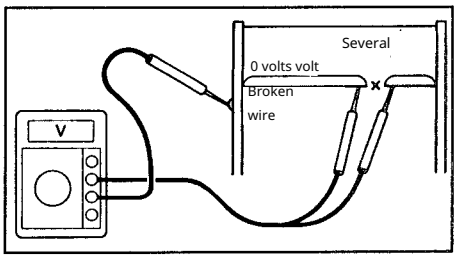

Note: if there is no break in the wire, the voltmeter shows 0 V at the side rail (+) of the thermoelement and, when moving the voltmeter contact toward the opposite end of the wire, the voltage will gradually increase rise to about 12 V.

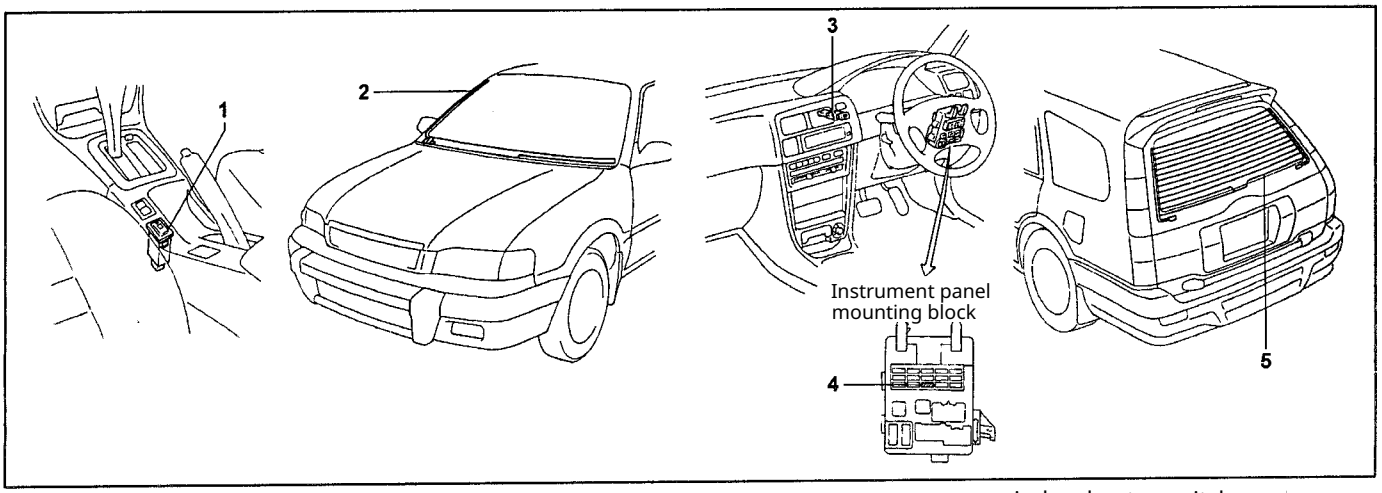

1 - windshield wiper de-icer switch, 2 - wiper de-icer, 3 - tailgate doors, 4 - DEFOG 30A fuse, 5 - rear door glass heater. - rear window heater switch

3. Wire repair.
a) Clean the wire ends at the break poin t with a solvent and apply protective ta pe on both sides of the wire.

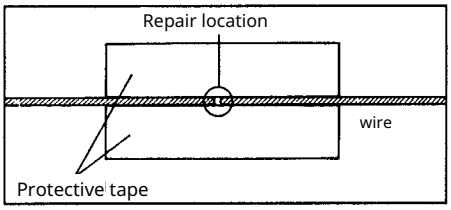

b) Thoroughly mix the repair compound and using a brush with a thin tip apply a drop of the sub- stance to the wire.

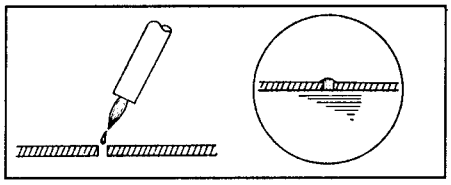

Repair compound: DUPONT PASTE No.481 7 or a similar substance. c) After a few minutes remove the protective tape an d allow to cure for 24 hours.

Clock

Clock check

Disconnect the connector and check ac- according to the table.

Output	Conditions Checks	Result
E	Continuously	Continuity
+B	Continuously	10-14 V
ILL	Переклю- reader management lighting from OFF to ON	0 В → 10-14 V
ACC	Ignition key ignition from position OFF в ACC	OB→>> 10-14 V

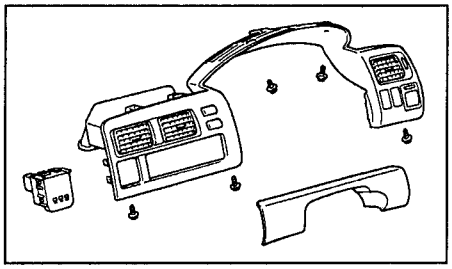

Horn

Horn relay

Horn check

1. Check that continuity between term inals "B" and "S" of the relay is always present. 2. Check for continuity betw een terminals "B" and "N" of the relay when battery voltage is applied betw een terminals "B" and "S".

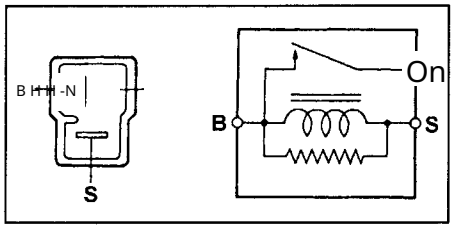

Horn switch check

1. Check the voltage between conductor "18" and ground. conductor "18" and ground.

Voltage ..... 10-14 V

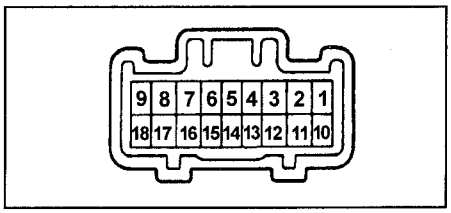

2. Check that when the switch is pressed the re is continuity between terminal "18" and g round.

Power windows Che ck of main power relay

1. Check for constant continuity betwee n terminals "1" and "2" of the relay.

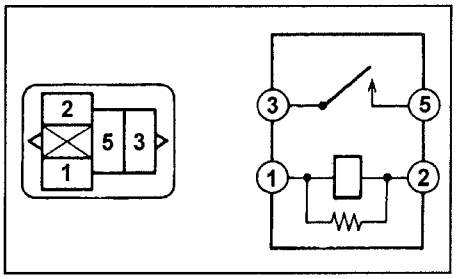

2. Check for continuity between termin als "3" and "5" of the relay when batter y voltage is applied between terminals "1" and "2".

On Check

of the main switch
of the power windows

1. Operation check. Check continuity ac cording to the table "Power Window M ain Switch Check".

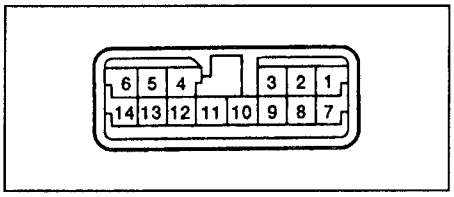

2. Backlight check. (Mo dels produced before May 1997) Connec t the battery (+) to terminal "13" or "14", (-) to terminal "5" or "6", and check that:

(Models produced from May 1997) Con nect the battery (+) to terminals "3" and "10", (-) to terminal "4" or "5", and chec k that:
The AUTO indicator is lit on the master po wer window switch.

Inspection of the master power window switch (models produced before May 1997)

Switch position		Front right Door	Front left Door	Rear right Door	Rear left Door
Regulator position		Conclusions			
Power windows not locked	Up	1 -13 - 14, 5 - 6 - 8	9 -13 - 14, 5 - 6 - 2	11 -13 - 14, 5 - 6 - 12	10 -13 - 14, 5 - 6 - 7
	Off	13 - 14, 1 - 5 - 6 - 8	13 - 14, 2 - 5 - 6 - 9	13 - 14, 5 - 6 - 11 - 12	13 - 14, 5 - 6 - 7 - 10
	Down	8 - 13 - 14, 1 - 5 - 6	2 - 13 - 14, 5 - 6 - 9	12 - 13 - 14, 5 - 6 - 11	7- 13 - 14, 5 - 6 - 10
Power windows blocked	Up	8 - 13 - 14, 5 - 6 - 8	9 - 13 - 14, 5 - 6	11 - 13 - 14, 5 - 6	10 - 13 - 14, 5 - 6
	Off	13 - 14, 1 - 5 - 6 - 8	13 - 14, 2 - 9, 5 - 6	13 14,5 6, 11 - 12	13 - 14, 5 - 6, 7 - 10
	Down	8 - 13 - 14, 1 - 5 - 6	2 - 13 - 14, 5 - 6	121314, 5-6	7 - 13 - 14, 5 - 6

Checking the master power window switch (models produced since May 1997)

Switch position		Front right door	Front left Door	Rear right door	Rear left door
Regulator position		Conclusions			
Power windows not locked	Up	1 - 3, 2 - 4 - 5	7 - 10, 4 - 5 - 8	10 - 13, 4 - 5 - 14	9 - 10, 4 - 5 - 11
	Off	1 - 4 - 5, 2 - 4 - 5	4 - 5 - 7, 4 - 5 - 8	4 - 5 - 13, 4 - 5 - 14	4 - 5 - 9, 4 - 5 - 11
	Down	2 - 3, 1 - 4 - 5	4 - 5 -7, 8 - 10	4 - 5 - 13, 10 - 14	4 - 5 - 9, 10 - 11
Power windows blocked	Up	1 - 3, 2 - 4 - 5	7 - 10	10 - 13	9 - 10
	Off	1 - 4 - 5, 2 - 4 - 5	7 - 8	13 - 14	9 - 11
	Down	2 - 3, 1 - 4 - 5	8 - 10	10 - 14	10 - 11

Check the switches

of the power windows
Check the conductivity according to in the table.

Position Switch	Conclusions
UP	1 - 2, 3 - 4
OFF	1 - 2, 3 - 5
DOWN	1 - 4, 3 - 5
DOWN (type 2)	2 - 3, 4 - 5

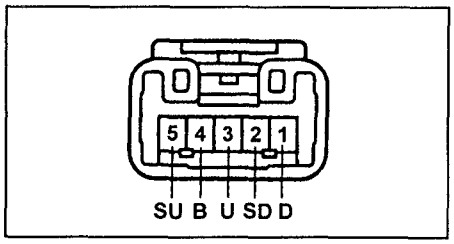

Front doors, rear doors (type 1)

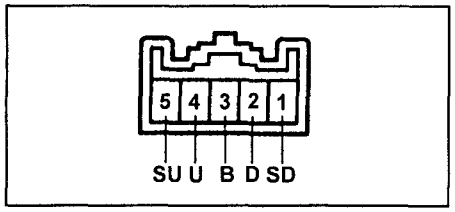

Rear doors (type 2)

Checking electric motors

of the power windows
1. Check the operation of the electric drive.
Connect the battery to the terminals (see table), and check the operation.

Conclusions	Direction of rotation
"1" → (+) "2" → (–)	clockwise
"2" → (+) "1" → (-)	counterclockwise

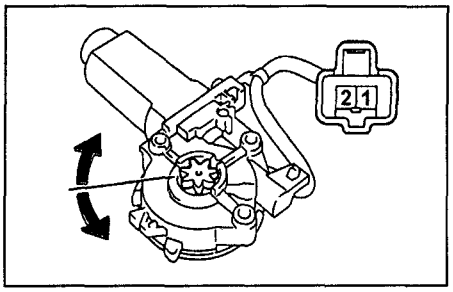

2. Inspection of motors and thermal fuses.
a) Connect the ammeter to terminal "1" or "2".
6) Completely close the window.
c) Check that when the window is fully l owered, the current is approximately 16 –23 A (16–34 A from May 1997).

g) While still holding the power window s witch, check that the thermal fuse has en gaged—
operates in the range from 4 to 40 (90 seconds since May 1997) secon ds (when the thermal fuse trips it e mits a characteristic sound).

Inspection of the main power window switch circuit (models produced until May 1997)

Outputs - "-"	Inspection conditions	Result
Connector disconnected on the harness side		
5 - "zemlya" (ground)	constant	conductivity
6 - "zemlya" (ground)	constant	conductivity
13 - "zemlya"	Ignition key from OFF to ON	0B → 10–14 V
14 - "ground"	Ignition key from OFF to ON	0 B → 10-14 V
"ground" - 1	constant	no conductivity
"ground" - 8	constant	no conductivity
Connector connected from the switch side Ignitio		
1 - "ground"	n key ON, driver's door switch (master switch) from OFF to UP	10 V → more than 9 V
1 - "ground"	Ignition key ON, driver's window open → switch from OFF to UP (auto) → window closed	10 V → more than 9 V → 0 V
8 - "ground"	Ignition key ON, switch on the driver's door (master switch) from OFF to DOWN	0 V → more than 9 V
8 - "ground"	Ignition key in ON, driver's window closed → switch from OFF to DOWN (auto) → window open	10 V → more than 9 V → 0 V

Checking the power window master switch circuit (models produced from May 1997)

Outputs +"" -	Inspection conditions	Result
Connector disconnected on the harness side		
3 - "ground"	continuously	10-14 V
4 - "ground"	continuously	conductivity
5 - "zemlya" (ground)	constant	conductivity
10 - "ground"	Ignition key from OFF to ON	0 V → 10–14 V
Connector connected from the switch side Ignition		
1 - "ground"	key ON, driver's door switch (main swit ch) from OFF to UP	10 V → more than 9 V
1 - "ground"	Ignition key ON, driver's window open → switch from OFF to UP (auto) → window closed	10 V → more than 9 V → 0 V
2 - "ground"	Ignition key ON, driver's door switch (main switch) From OFF to DOWN	10 V → more than 9 V
2 - "ground"	Ignition key ON, driver's window closed → switch from OFF to DOWN (auto) → window open	0 V → more than 9 V → 0 V

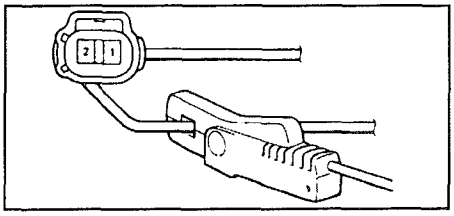

d) Check that the power windows b egin to operate again within 60 sec onds.

Check the door lock control rel ay Check the relay using the table "Door Lock Contr ol Relay Circuit Check".

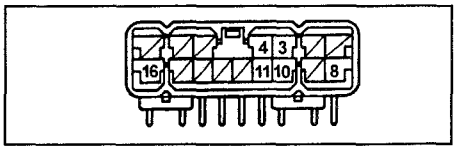

Central locking Check th e door lock control relay

Disconnect the connector from the relay and inspect the connector on the wire sid e as shown in the table "Door Lock Relay Inspection (for the central locking system)".

Check of the door lock control relay circuit (for the central locking system)

Conclusions "+" - "-"	Inspection conditions	Result
Connector disconnected, measurement from the wiring harness side		
3 - 4	Constant	conductivity
8 - "ground"	Constant	10–14 V
10 - "ground"	Door lock control switch from OFF to LOCK position.	no conductivity → conductivity
	Insert the key into the driver's door lock and turn the key from LOCK to any other position	conductivity → no conductivity
11 - "ground"	Door lock control switch from OFF to UNLOCK.	no conductivity → conductivity
11 - "ground"	Insert the key into the driver's door lock and turn the key from the UNLOCK position to any other position	conductivity → no conductivity
16 - "ground"	Constant	conductivity
Connector connected, measurement from the relay side		
3 - "ground"	Door lock control switch from OFF to UNLOCK.	one blink
4 - "ground"	Door lock control switch from OFF to LOCK	one blink

Door Lock Control Relay Check Table (for the Remote Door Lock Control System)

Terminals	Inspection conditions	Result
Connector disconnected, measurement from the wiring harness side		
1 - "ground"	Ignition key from OFF to ON	0B → 10–14 V
3 - "ground"	Continuously	no conductivity
4 - "ground"	Continuously	no conductivity
6 - "zemlya" (ground)	Driver's door lock knob from LOCK to UNLOCK	no conductivity → conductivity
7 - "ground"	Ignition key inserted → removed	0 B → 10-14 V
8 - "ground"	Continuously	10 - 14 V
10 - "ground"	Lock switch from OFF to LOCK	no conductivity → conductivity
	Move the key in the driver's door lock from the middle position to the LOCK position	conductivity → no conductivity
11 - "ground"	Lock switch from OFF to UNLOCK	no conductivity → conductivity
	Move the key in the driver's door lock from the middle position to the UNLOCK position	conductivity → no conductivity
14 - "ground"	Door courtesy lamp switch, all doors closed → any door opened	10–14 V → 0 V
16 - "ground"	Constant	conductivity
Connector connected, measurement from the relay side		
3 - "ground"	Lock switch from OFF to UNLOCK	one blink
	Move the key in the driver's door lock from the middle position to the UNLOCK position	one blink
	Remove the key from the ignition switch, all doors closed, press the remote transmitter button (all doors unlocked) *1 Turn the lock switch from OFF to UNLOCK	one blink
4 - "ground"	Move the key in the driver's door lock from the middle position to the LOCK position	one blink
	Remove the key from the ignition switch, all doors closed, press the remote transmitter button (all doors locked) *1	one blink
12 - "ground"	Remove the key from the ignition switch, all doors closed, press the remote transmitter button (all doors locked or unlocked) *1	one blink *2
13 - "ground"	Constant	conductivity

Note to the table:
*1 check after registering new codes.
*2 one blink ("flickering" blink)

Checking the central lock s witch

1. Check continuity between the terminals of the switch connector in different positions of the switch.

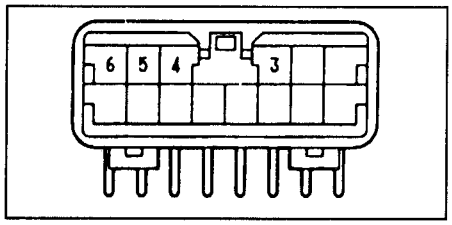

Position Switch	Conclusions
LOCK (locked)	3 - 5 - 6
OFF	5 - 6
UNLOCK (unlocked)	4 - 5 - 6

Switch inspection tailgate door lock

1. Check continuity between the terminals of the switch connector in different positions of the switch.

Position Switch	Conclusions
LOCK (locked)	1 - 6, 3 - 4
middle position	no conductivity
UNLOCK (unlocked)	1 - 3, 4 - 6

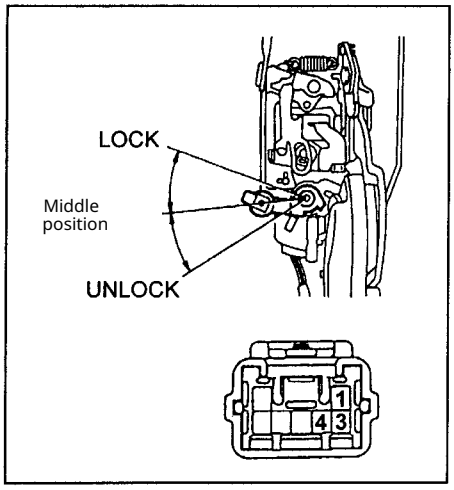

Check of the central locking switch (in the door loc k)

1. Check continuity between the terminals of the switch connector in different positions of the switch.

Switch Position	Conclusions
LOCK (locked)	3 - 4
middle position	no conductivity
UNLOCK (unlocked)	1 - 3

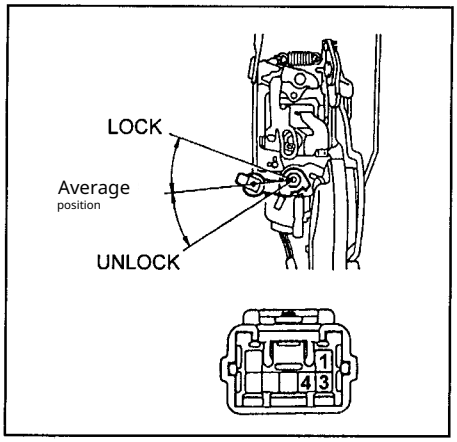

Electric actuator lock of the doo r inspection

1. Check the operation of the front door l ock actuator.

a) Connect the battery "+" to termi nal "2" and the battery "-" to termi nal "7"; check that the latch moves to the "unlocked" (UNLOCK) positio n. There is continuity between ter minals "5" and "6". b) Reverse the p olarity of the battery connection: t he door lock latch should move to t he "locked" (LOCK) position. There i s no continuity between terminals "5" and "6".

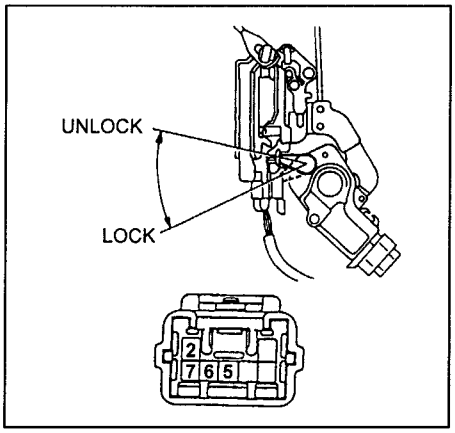

2. Check the operation of the rear door l ock actuator.

a) Connect the battery "+" to termi nal "2" and the battery "-" to termi nal "1"; check that the latch moves to the "locked" (LOCK) pos ition. b) Reverse the polarity of the battery connection: the door lock latch should move to the "un locked" (UNLOCK) position.

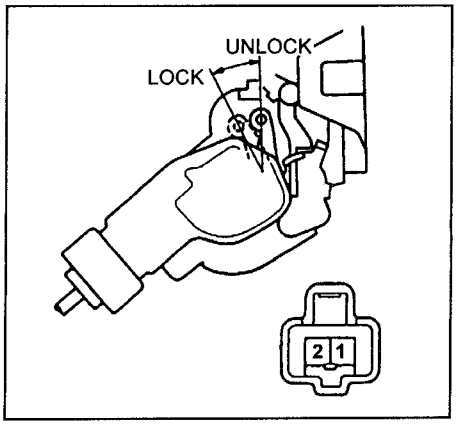

2. Checking the operation of the rear gate door lock actuator.

a) Connect the battery "+" to terminal "1 " a . "-" nd terminal "2", check that the l atch moves to the "locked" (LOCK) positi on. b) Reverse the polarity of t he battery connection: the rear gate do or latch should move to the "unlocked" (UNLOCK) position.

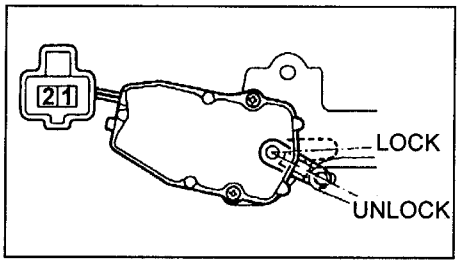

Remote lock

Some variants are equipped with a rem ote door locking control system. Locking and unlocking the doors is performed b y pressing the button on the key. The di stance to the vehicle at that time should be no more than 1 m.

Inspection

1. Checking the lock operation.

a) When pressing the switch on the key, the door locks operate, except for items 3, 4, 5.

c) If at least one door is not locked, then when the key switch is pressed all doors l ock. If all doors are locked, pressing the s witch will unlock all doors. 2. Checking th e auto-locking mechanism. Ch eck that if, after unlocking the doors, no doo r is opened within 30 seconds, all doors lock automatically.

3. Check that when the key is inserted into the ignition lock, pressing the key switch does not activate the remote lock.

4. Check that when pressing the switch on the key the lock activates only once; a repeat activation is possible only 1 se cond after releasing the button. 5. Che ck that if at least one door is ajar, the door locks do not activate.

6. Each transmitter set has its own iden tification co de for the transmitter (k eys) and the receiver. If the receiver rec eives more than 2 incorrect codes, the remote locking remote system is blocked.

Receiver and Transmitter

1. Replacing the transmitter battery. (

a) Insert a flat-blade screwdriver and remov e the cover.

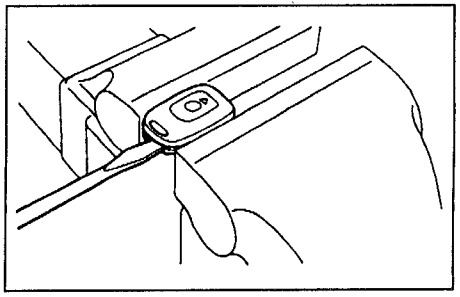

b) Install the new battery and re- Cover the lid.

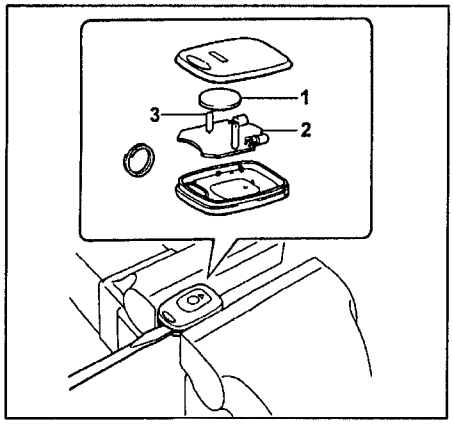

1 - battery, 2 - transmitter, 3 - terminal.

2. Registering a new code.

Note:

up to 2 new codes can be registered. previ ously registered codes can be overwritten.

when replacing the transmitter (contact oxidation, battery discharge, etc.) perfor m the code registration twice because pr eviously recorded codes may be erased.

register new codes using the following p rocedure:

a) All doors closed, key not inserted in the ignition switch.

b) Insert the key into the ignition lock, turn the ignition on and off several times within 15 seconds and remove the key.

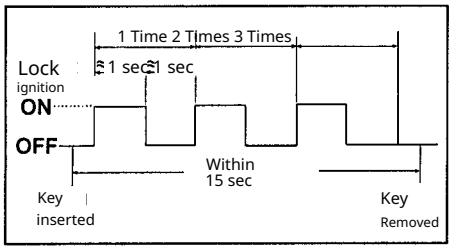

c) After the key is removed from the ignition lock, within 15 seconds press the transmitter button and aim it toward the receiver.

d) After receiving the signal, the door locks will automatically lock, and after one second check whether they can be unlocked once.

e) If not, start the registration procedure from the beginning. If yes, within 15 seconds after unlocking the locks repeat steps (b), (c) and (d).

Note:

1. If it is necessary to register another transmitter, repeat the procedure described above.

2. If during the registration process yo u failed to perform one of the followin g items, start the registration again:

a) exceeding the specified registration time;

b) if one of the doors is not tightly clo sed;

c) when removing the key from the ignition lock; ignition;

d) if the ignition has been turned on and off more than four times.

Conclusions	Inspection conditions	Result
Please follow my specified steps and the rules to translate the input content into English Translation requirements: 1. Ensure the translation is accurate,		
The connector has been disconnected		
1 - "ground"	Continuously	conductivity
2- 12 output relay connector control dep- door cam	Continuously	conductivity
3 - "ground"	Continuously	10-14 V
Connector connected		
2 - 1	Key not inserted in ignition switch, all doors closed → when button pressed → 0 V pressing the transmitter locks and unlocks all doors	0 V → 10–14 V

3. Receiver inspection.

Check the receiver circuit according to the table "Remote lock receiver check".

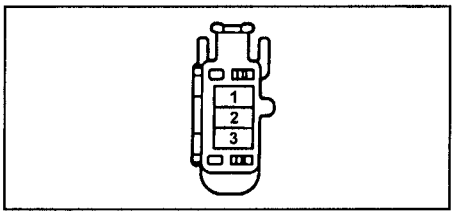

Sunroof actuator

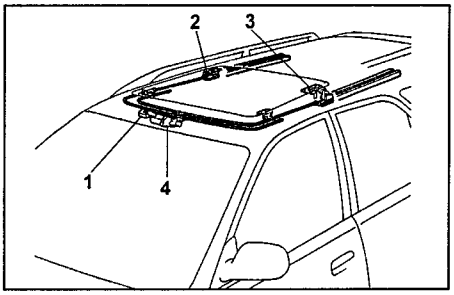

Sunroof electric drive. 1 - sunroof control relay- 3 - right cable, 4 - left cable, 4 - sunroof electric drive.

Checking the main power relay

1. Check for constant continuity betwee n terminals "1" and "2" of the relay.

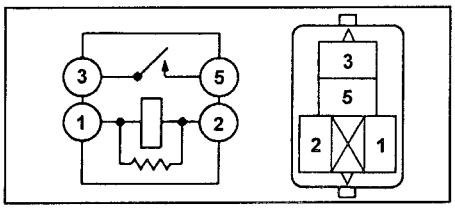

2. Check for continuity between termi nals "3" and "5" of the relay when bat tery voltage is applied between termi nals "1" and "2". Checking the sw itch Check continuity accordin g to the table.

Switch position	Conclusions
OPEN	3 - 8
OFF	no conductivity
CLOSE	4 - 8

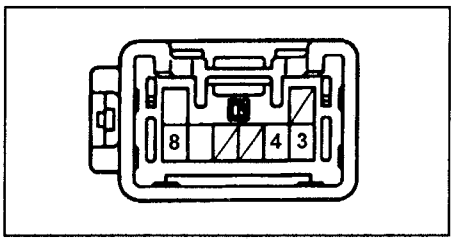

Checking the operation of the electric motor

1. Connect the battery "+" to terminal "2", SF F to terminal "1" of the connector and chec k that the armature of the electric motor rot ates clockwise.

2. Reverse the polarity of the battery connecti on; the direction of rotation should change to the opposite.

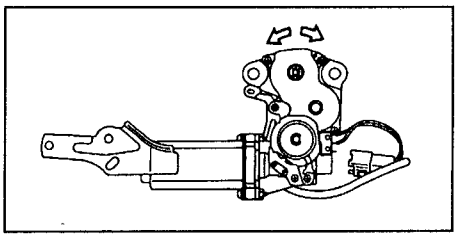

End switch inspection

Check continuity between the swit- ches with connector contacts:

Switch position	Conclusions
ON (pin pressed)	3 - 4
OFF (pin released)	3 × 4

x - no conductivity

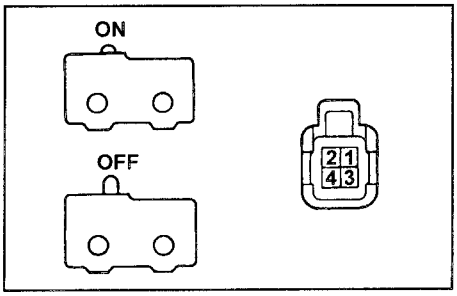

Checking the thermal fuse

1. Connect the "+" of the battery to term inal "2", and to terminal "1", inserting an ammeter into the circuit.

2. Check that within 10–60 seconds after the sunroof is fully opened the current drops from 16–23 A to 0 (the thermal fu se will operate).

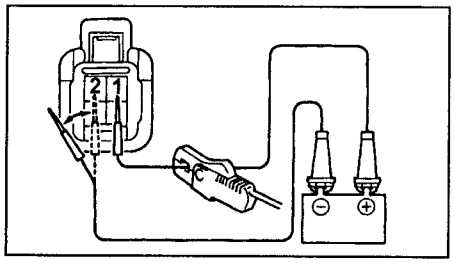

3. Reverse the voltage polarity and verify that the sunroof begins to close after app roximately 60 seconds. Checki ng the sunroof drive control relay

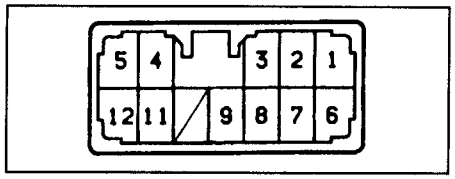

Check the circuit according to the table "sunro of drive control relay check".

Exterior mirror position adju stment system

Operation check

folding mechanism

1. Turn the ignition key to the ACC position.

2. Perform the folding mechanism chec k as follows:

a) Press the folding switch and confirm that the mirrors moved from the opera ting position to the folded position position.

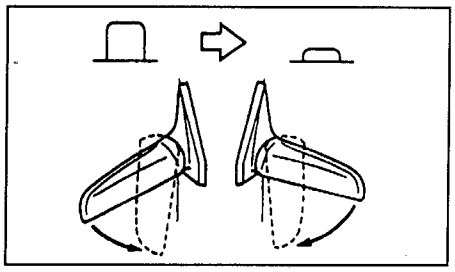

b) Make sure that when the mirrors are manu ally moved to the operating position they aut omatically return to the folded position.

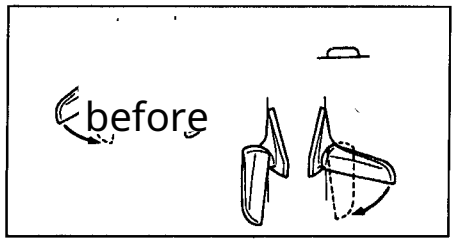

d) Release the folding switch and make sure that the mirrors have moved from the folded to the operating position. position.

Checking the sunroof actuator control relay

Conclusions	Inspection conditions	Result
	The connector has been disconnected	
11 - "ground" | Constant 12 - "ground" | Constant		conductivity 10–14 V
6 - "zemlya" (ground)	Ignition key from OFF to ON Sunr	0 V → 10-14 V
1 - "ground"	oof slide switch from OFF to OPE N	no conductivity → conductivity
2 - "ground"	Sunroof slide switch from OFF t o CLOSE	no conductivity → conductivity
8 - "ground"	Limit switch No.1 from OFF to ON	no conductivity → conductivity
4 - "ground"	Constant	no conductivity
5 - "zemlya" (ground)	Continuously	no conductivity
	Connector connected	
4 - "ground"	both limit switches OFF	conductivity
	Ignition key in ON position, sunroof slide switch slide switch in CLOSE, limit switch from ON to OFF	10–14 V0V
	Ignition key in ON position, limit switch in ON, su nroof slide switch from OFF to CLOSE	OV→ 10–14 V
5 - "ground"	both limit switches OFF Ignition key in ON position, end switch 0 V switch in ON, switch sunroof drive shifted from OFF to OPEN	conductivity → 10-14 V
	Ignition key in ON position, roof drive switch shifted from OFF to OPEN | 10–14 V → 0 V	
	roof drive switch shifted from OFF to OPEN, end switch from OFF to ON	

Mirror control switch check

Switch position Regulator position	L (left)	OFF	R (right)
	Conclusions		
Up	1 - 9, 6 - 10	6 - 10	7 - 9, 6 - 10
Down	6 - 9, 1- 10	6 - 9	6 - 9, 7 - 10
Left	5 - 9, 6 - 10	6 - 10	8- 9, 6 - 10
Right	6 - 9, 5 - 10	6 - 9	6 - 9, 8 - 10
Folding (OFF)	3 - 9, 4 - 10		
Folding (ON)	4 - 9, 3 - 10		

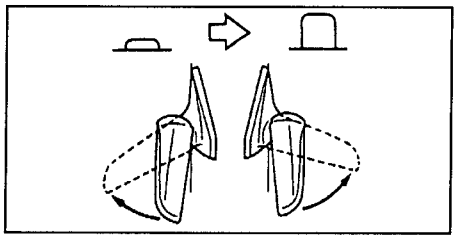

c) Make sure that when the mirrors are ma nually moved to the folded position they a utomatically return to the operating positi on.

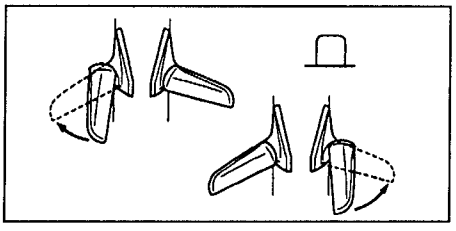

Checking the mirror position ad justment switch

Disconnect the switch connector and c heck continuity between the terminals according to the table "Mirror Control Switch Check".

Without folding mirrors

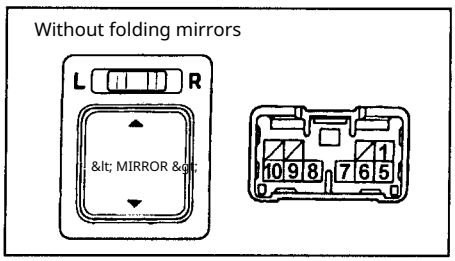

With mirror folding system

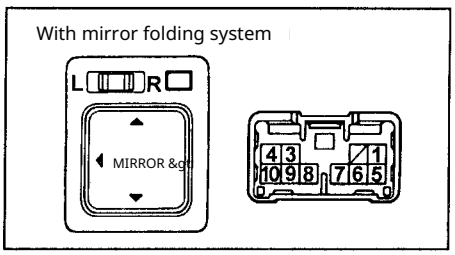

Powertrain check

1. Check of the mirror adjustment drive.

a) Connect the vehicle battery to termi nals "5" (+) and "3" (~) of the connector, and check that the mirror moves upwa rd.

b) Reverse the polarity of the supply voltage an d check that the mirror moves downward.

c) Connect the vehicle battery to terminals "1" (+) and "3" (~) of the connector, and check that the mirror moves to the left.
d) Reverse the polarity of the supply voltage and check that the mirror moves downward.

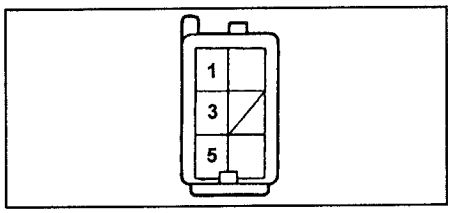

2. Check of the folding drive. a) Connect the vehicle battery to terminals "2" (+) and "6" (-) of the connector, and check that the mirror moves into the folded position.

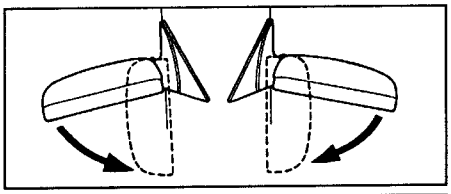

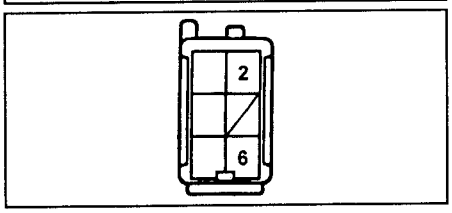

b) Reverse the polarity of the supply voltage and check that the mirror returns to the working position.

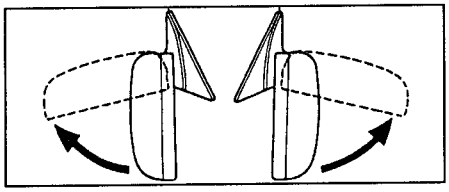

3. Check the continuity between terminals 2 and 6 of the switch connector under the conditions specified in the table.

Reverse position

Position	Conclusions
tester to terminal "2" 11_11 tester to terminal "6"	no conductivity at the switch in the "folded" position
tester to conclusion "6" "-" tester to conclusion "2"	no conductivity at the switch in position work

Position between working and return

Position	Conclusions
+ of the tester to conclusion "2" "-" tester to conclusion "6"	there is conductivity with the switch off in the "folded" position
+ of the tester to terminal "6" "-" of the tester to terminal "2"	no conductivity with the switch off in the "working" position

Position between working and folded

Position	Conclusions
+ of the tester to terminal "-" of the tester "2" to conclusion "6"	there is conductivity at the switch in the "folded" position
+ of the tester to terminal "6" "-" tester to conclusion "2"	there is conductivity at the switch in the "operating" position

Folded position

Position	Conclusions
tester "+" to terminal "2" "-" tester to terminal "6"	no conductivity at the switch in the "folded" position
tester "+" to terminal "6" "-" tester to conclusion "2"	there is conductivity when the switch is in the position work

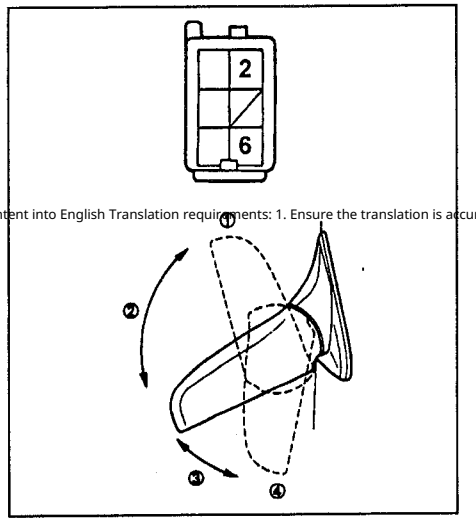

Inspection

integrated relay

1. Connect the "+" terminal of the rechargeable battery to terminal "3" or "1", and the "-" terminal to terminal "7".
2. From the position specified in item (1), connect the "+" of the battery to terminal "4" or "8" and make sure that the buzzer sounds intermittently.
3. From the position specified in item (2), disconnect the "-" of the battery from terminal "4" and make sure that the buzzer has stopped. 4. From the position specified in item (2), disconnect the "-" of the battery from terminal "8" and make sure that the buzzer has stopped.

5. From the position specified in item (2), connect the "+" of the battery to terminal "9" and make sure that the buzzer has stopped.

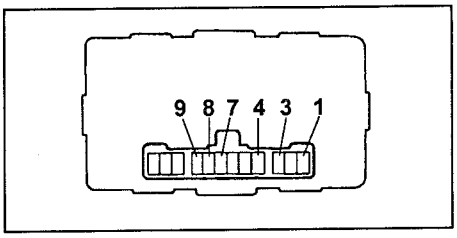

Wiring diagrams

Designations used on the wiring diagrams

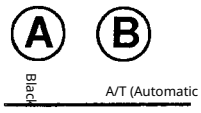

A - wire color
B - the text in parentheses indicates that this wire is used only in a sp ecific body style, engine, etc.

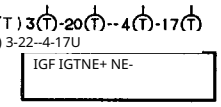

The connector code of the component and the terminal numbers of the connector. The arrangement of connector terminals i s shown at the bottom of each diagram.

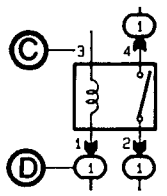

C - connector terminal number.
D - fuse/relay box number.

Ground point code.

Indicates the connector and its number
connector terminal
plug part
shown by arrows.

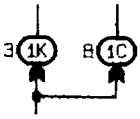

Mounting block number
and the connector pin number.

IGNITION C
OIL

Name and connector code of the component. The pin locations of the connectors are shown at the bottom of each diagram.

Wire colors

色 color	** green
白 white	** pink
黑 black	7 gray
* red	橙 orange
* brown	* dark gray
*** purple	黃綠 toxic green
黃 yellow	乳白 transparent
青 blue	

If a combination of
two colors appears on the diagram, the first character indicates the wire's main color,
and the second indicates the stripe color.

Location of grounding points

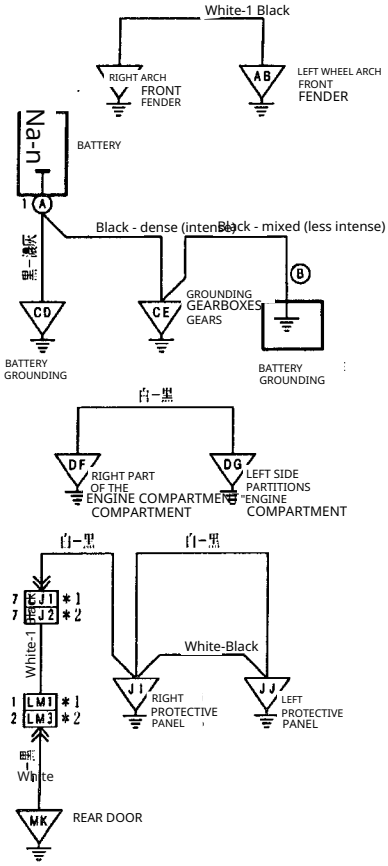

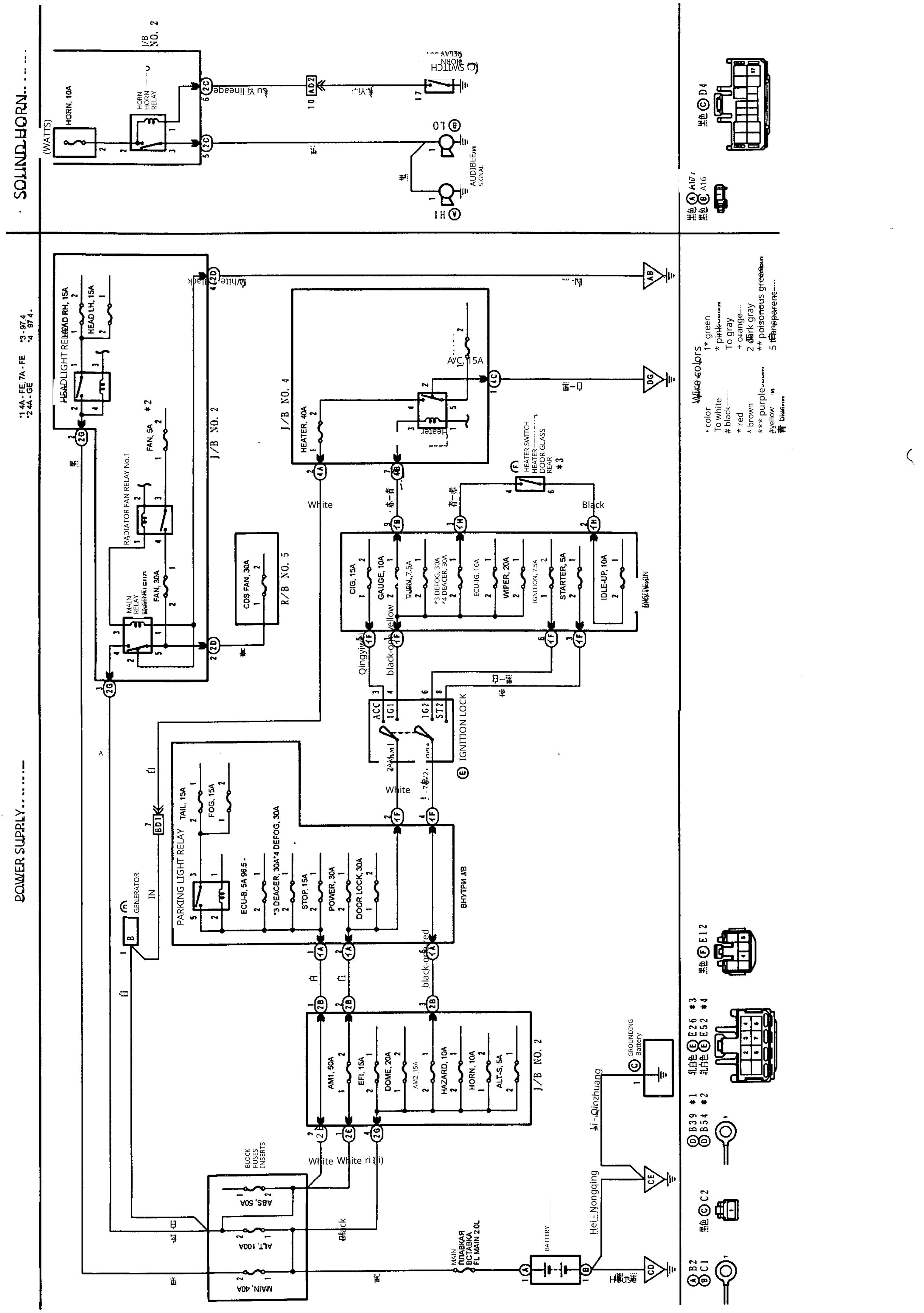
SOUND HORN
POWER SUPPLY
HORN, 10A
HORN RELAY
J/B NO. 2
J/B NO. 4
R/B NO. 5
HEADLIGHT RELAY
HEAD RH, 15A
HEAD LH, 15A
RADIATOR FAN RELAY No.1
FAN, 5A
FAN, 30A
MAIN RELAY
CDS FAN, 30A
HEATER, 40A
A/C, 15A
HEATER SWITCH
CIG, 15A
GAUGE, 10A
TURN, 7.5A
WIPER, 20A
STARTER, 5A
IDLE-UP, 10A
IGNITION LOCK
PARKING LIGHT RELAY
TAIL, 15A
FOG, 15A
STOP, 15A
POWER, 30A
DOOR LOCK, 30A
GENERATOR
AM1, 50A
EFI, 15A
DOME, 20A
AM2, 15A
HAZARD, 10A
HORN, 10A
ALT-S, 5A
ABS, 50A
ALT, 100A
MAIN, 40A
BATTERY
GROUNDING
Wire colors

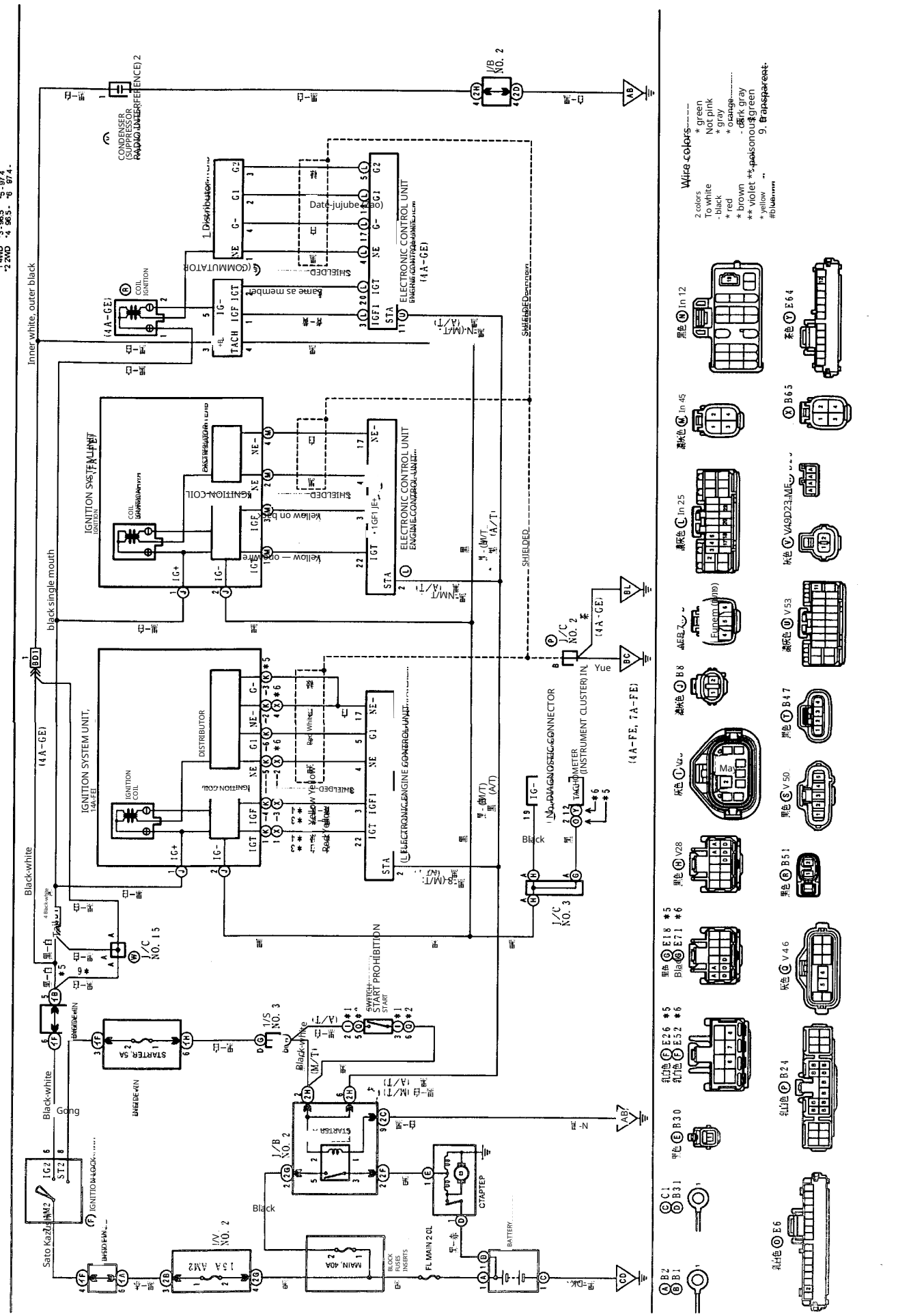
STARTING AND IGNITION SYSTEM
IGNITION SYSTEM UNIT
ELECTRONIC CONTROL UNIT
DISTRIBUTOR
IGNITION COIL
CONDENSER (SUPPRESSOR RADIO INTERFERENCE) 2
Inner white, outer black
black single mouth
Black-white
Gong
Black
Yue
Date-jujube (zao)
SHIELDED
START PROHIBITION
STARTER, 5A
MAIN, 40A
BLOCK FUSES INSERTS
FL MAIN 2 OL
BATTERY
CTAPTEP
Wire colors
2 colors
To white
- black
* red
* brown
** violet
* yellow
* green
Not pink
* gray
* orange
- dark gray
* poisonous green
9. Transparent

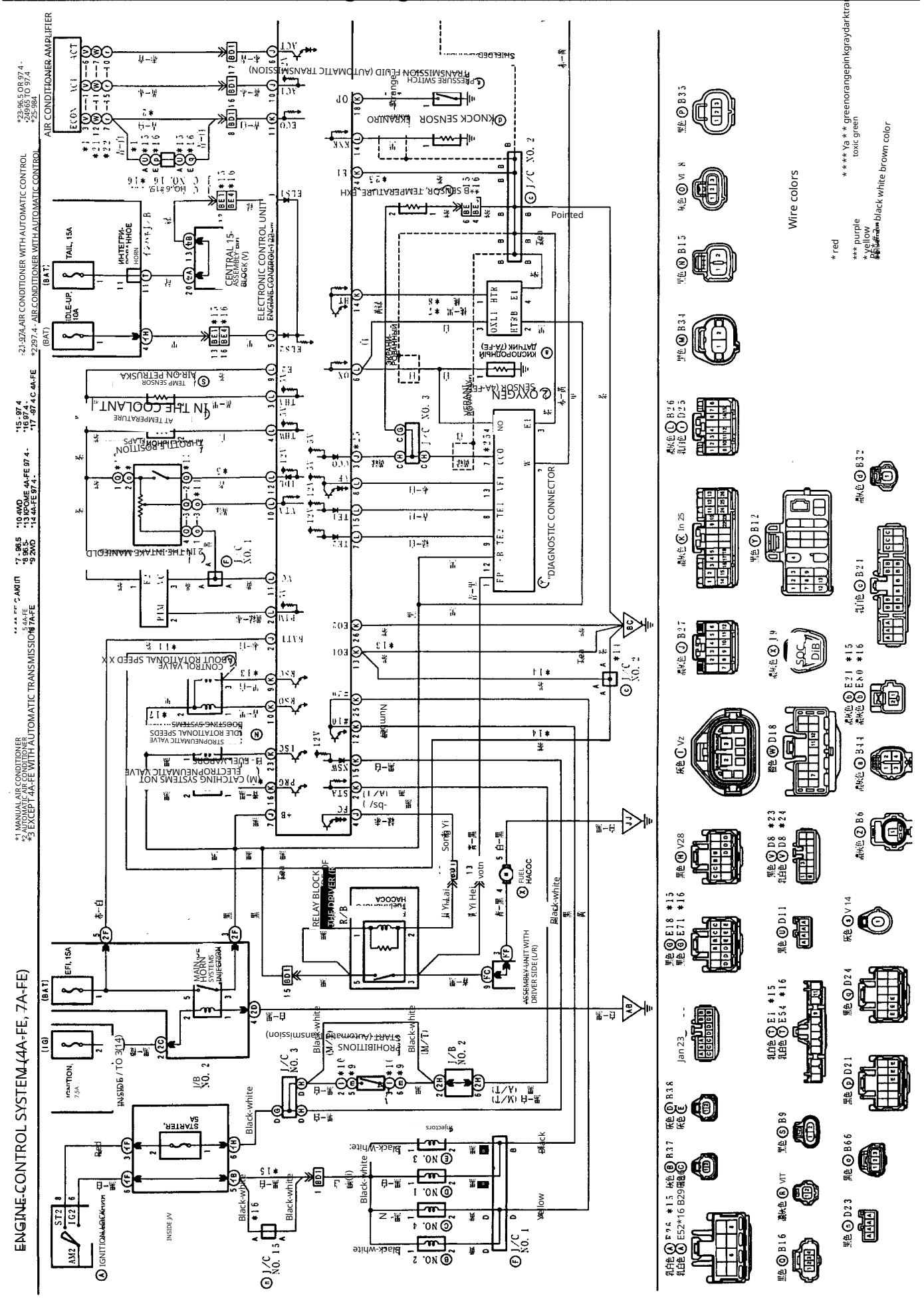
ENGINE CONTROL SYSTEM (4A-FE, 7A-FE)
*1 MANUAL AIR CONDITIONER
*2 AUTOMATIC AIR CONDITIONER
*3 EXCEPT 4A-FE WITH AUTOMATIC TRANSMISSION
AIR CONDITIONER AMPLIFIER
*21-97 4 AIR CONDITIONER WITH AUTOMATIC CONTROL
*2297 4 - AIR CONDITIONER WITH AUTOMATIC CONTROL
*23-96 5 OR 97 4 -
*24-96 5 TO 97 4
*25-98 4
ELECTRONIC CONTROL UNIT
ENGINE CONTROL
CENTRAL 15-
ASSEMBLY
BLOCK (V)
HORN
TAIL, 15A
IDLE-UP, 10A
(BAT)
IGNITION, 7.5A
EFI, 15A
MAIN
SYSTEMS
STARTER
INSIDE J/B
TO 3(14)
IGNITION
ST2
IG2
AM2
J/B NO. 2
J/B NO. 3
J/C NO. 1
J/C NO. 2
J/C NO. 3
RELAY BLOCK
R/B
ASSEMBLY UNIT WITH
DRIVER SIDE (L/R)
FUEL
Black-white
Black-w/hite
Yellow
Red
Pointed
Injectors
NO. 1
NO. 2
NO. 3
NO. 4
KNOCK SENSOR
TRANSMISSION FLUID (AUTOMATIC TRANSMISSION)
PRESSURE SWITCH
SHIELDED
ELECTRONIC CONTROL UNIT
ENGINE CONTROL
DIAGNOSTIC CONNECTOR
OXYGEN
SENSOR (4A-FE)
IN THE COOLANT
AT TEMPERATURE
TEMP SENSOR
AIR-ON PETRUSKA
THROTTLE POSITION
THROTTLE SENSOR
IN THE INTAKE MANIFOLD
TEMP SENSOR
CONTROL VALVE
ABOUT ROTATIONAL SPEED XX
IDLE ROTATIONAL SPEEDS
STROPENUMATIC VALVE
BOOSTING SYSTEMS
ELECTROPNEUMATIC VALVE
(M) CATCHING SYSTEMS NOT
PROHIBITIONS
START (Automatic transmission)
START (M/T)
Num
Sonar
Yl
Hel
vorn
Jan 23
Wire colors
* red
** purple
*** yellow
**** Ya * * greenorangepinkgraydarktransparent-gray
toxic green
black white brown color

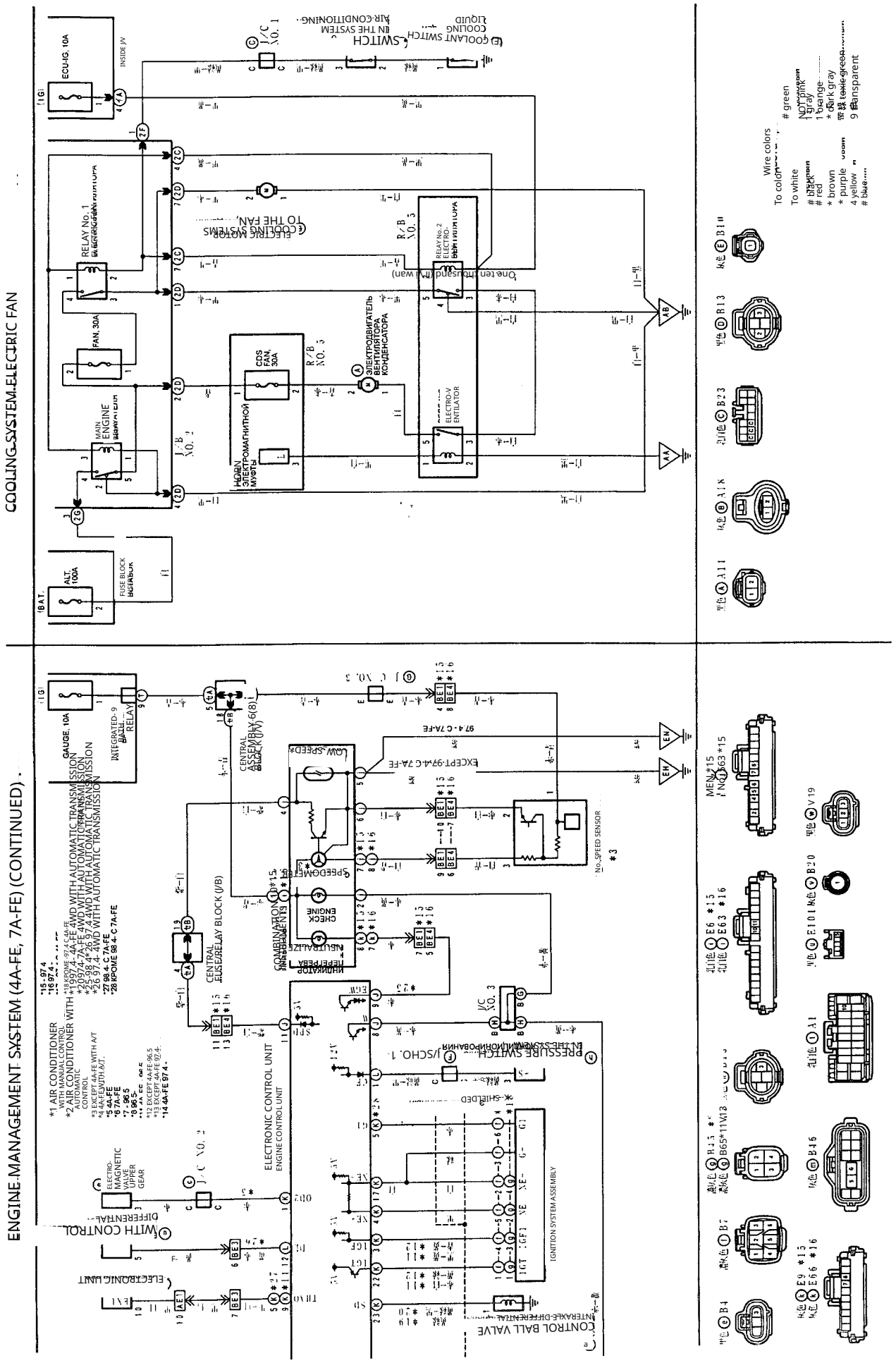
COOLING SYSTEM ELECTRIC FAN
ENGINE MANAGEMENT SYSTEM (4A-FE, 7A-FE) (CONTINUED)
ECU-IG, 10A
INSIDE J/V
RELAY No. 1
FAN, 30A
MAIN ENGINE
ALT. 100A
FUSE BLOCK
CDS FAN, 30A
HORN
ELECTRO-V ENTILATOR
RELAY No. 2
ELECTRIC MOTOR
COOLING SYSTEMS TO THE FAN
COOLANT SWITCH
AIR CONDITIONING
GAUGE, 10A
INTEGRATED-9 RELAY
CENTRAL ASSEMBLY 6(8)
CENTRAL FUSE/RELAY BLOCK (J/B)
COMBINATION
CHECK ENGINE
SPEEDOMETER
LOW SPEED
No. SPEED SENSOR
ELECTRONIC CONTROL UNIT
ENGINE CONTROL UNIT
ELECTRO-MAGNETIC VALVE UPPER GEAR
WITH CONTROL DIFFERENTIAL
ELECTRONIC UNIT
PRESSURE SWITCH
IGNITION SYSTEM ASSEMBLY
CONTROL BALL VALVE
INTERAXLE DIFFERENTIAL
Wire colors
To white
black
red
* brown
* purple
4 yellow
green
1 gray
1 orange
* dark gray
9 transparent

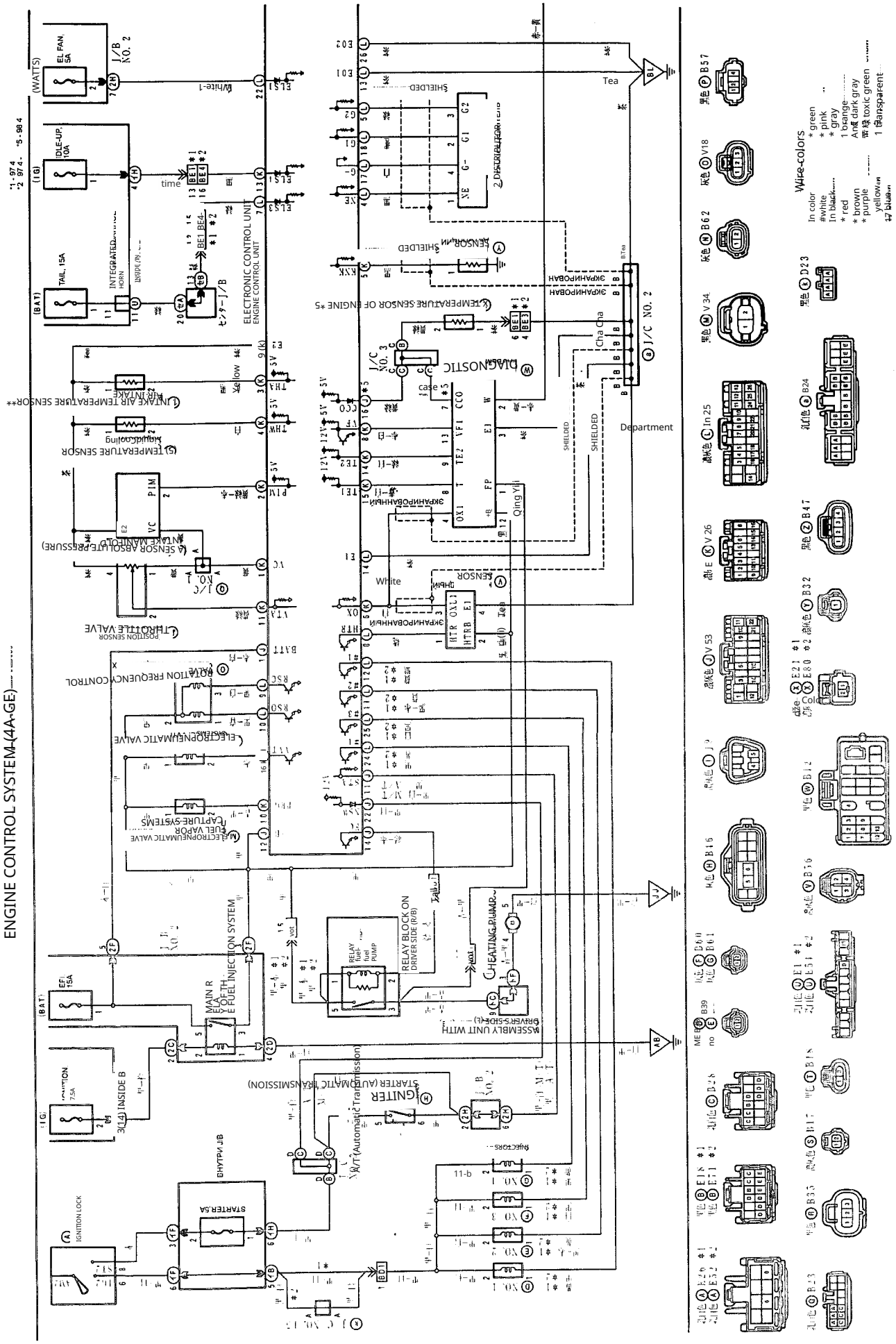
ENGINE CONTROL SYSTEM-(4A-GE)
ELECTRONIC CONTROL UNIT
ENGINE CONTROL UNIT
DIAGNOSTIC
Wire colors
* green
* pink
* gray
1 orange
* red
* brown
* purple
yellow
1 transparent
IGNITION LOCK
STARTER SA
MAIN RELAY
EFI MAIN RELAY
FUEL PUMP
RELAY BLOCK ON DRIVER SIDE (R/B)
HEATING PUMP
STARTER (AUTOMATIC TRANSMISSION)
A/T (Automatic Transmission)
THROTTLE VALVE
TEMPERATURE SENSOR OF ENGINE *5
INTAKE AIR TEMPERATURE SENSOR**
ELECTROMAGNETIC VALVE
ELECTROPNEUMATIC VALVE
ROTATION FREQUENCY CONTROL VALVE
Department
Cha Cha
White
Tea
Qing Yu
SHIELDED
case
time
Yellow
Blue
Black
Red
Brown
Purple
Gray
Orange
Green
Pink
Transparent

ENGINE CONTROL SYSTEM (4A-GE)

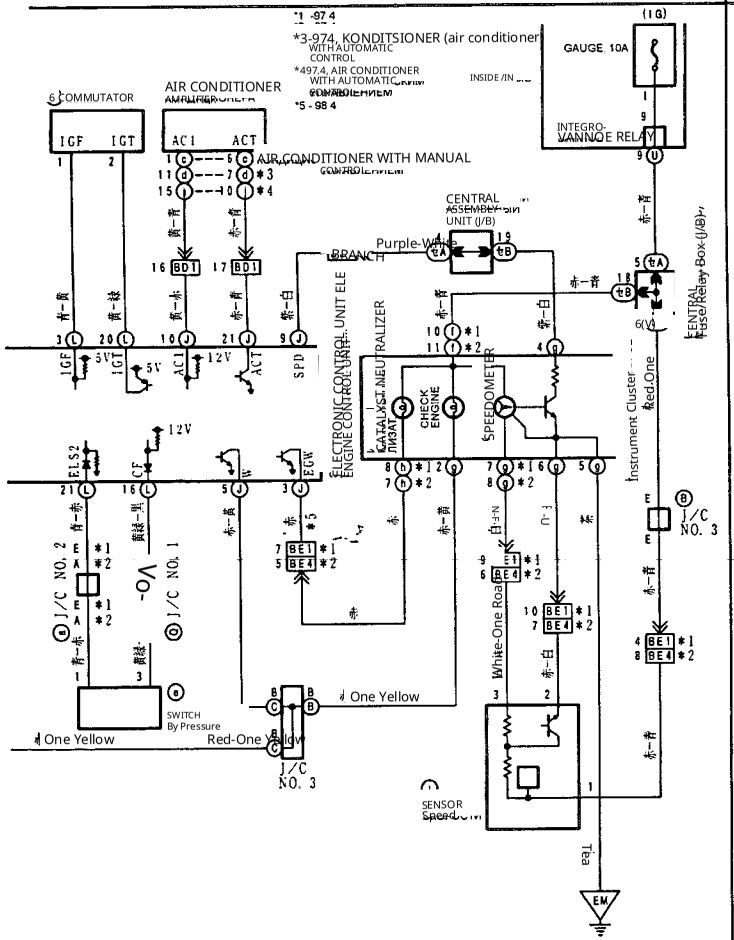

Charging System

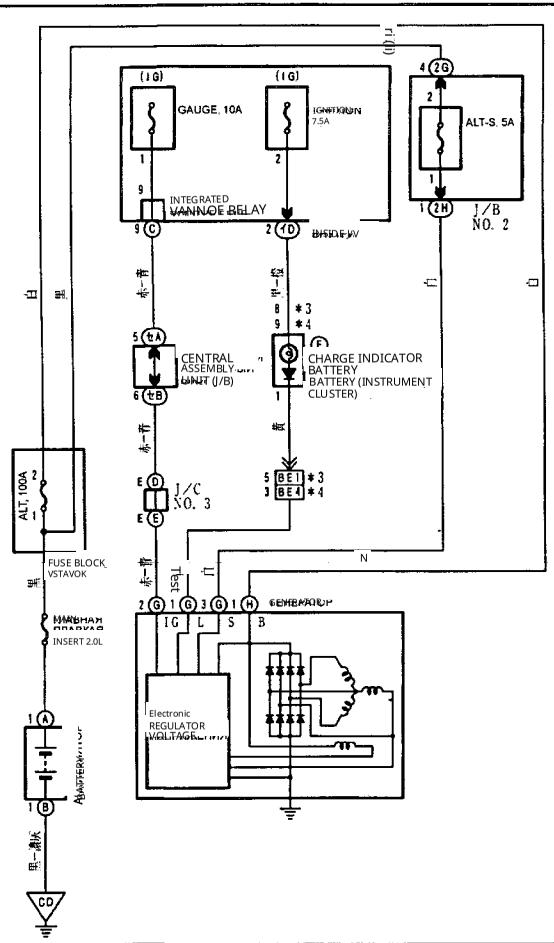

SHIFT LOCK

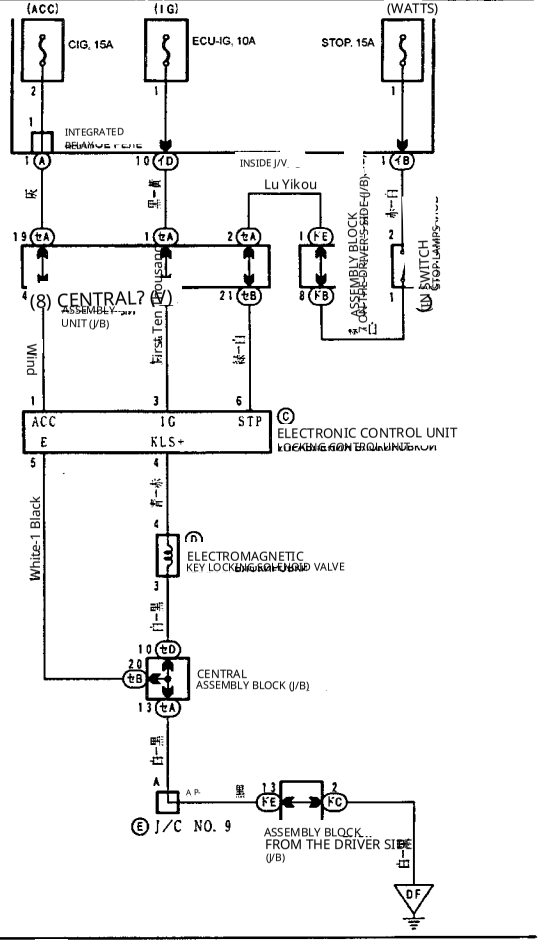

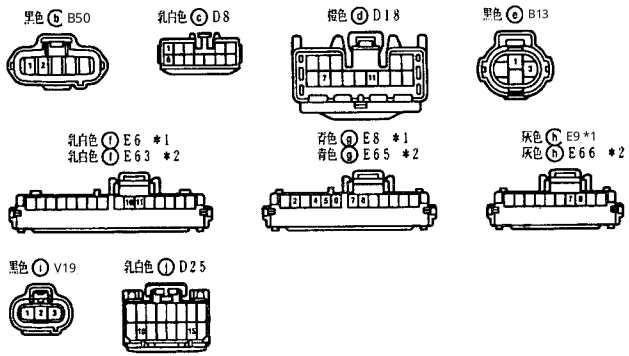

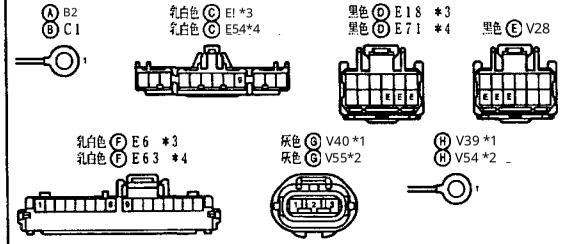

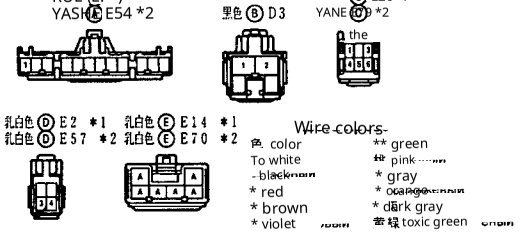

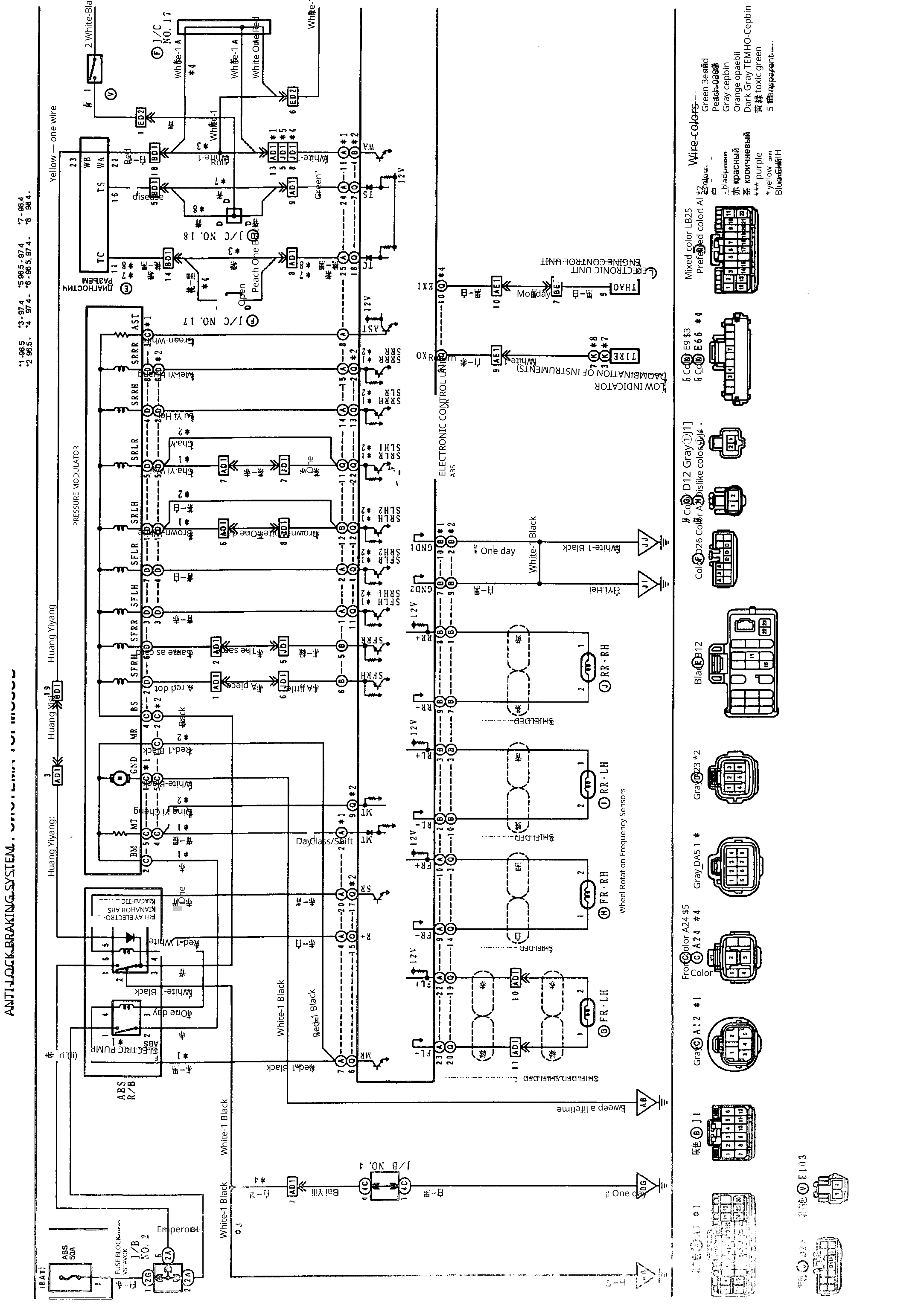
ANTI-LOCK BRAKING SYSTEM
PRESSURE MODULATOR
ELECTRONIC CONTROL UNIT
ABS
Wheel Rotation Frequency Sensors
Wire colors
FUSE BLOCK
ABS 50A
J/B NO. 2
J/B NO. 1
J/C NO. 17
J/C NO. 18
ABS R/B

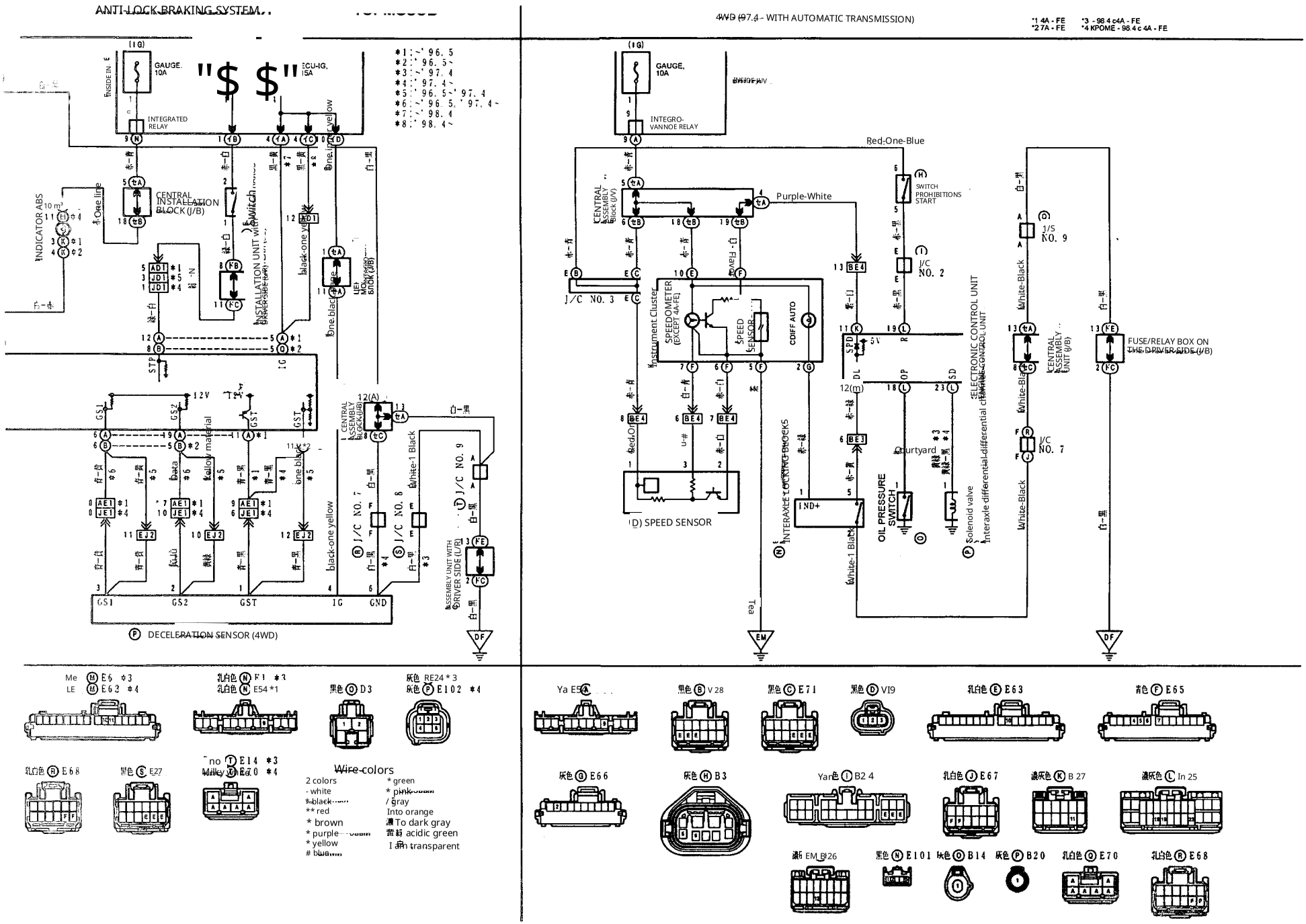
ANTI-LOCK BRAKING SYSTEM
4WD (97.4 - WITH AUTOMATIC TRANSMISSION)
*1 4A - FE
*2 7A - FE
*3 - 98.4 c4A - FE
*4 KPOME - 98.4 c 4A - FE
GAUGE, 10A
INTEGRATED RELAY
INTEGRO-VANNOE RELAY
CENTRAL INSTALLATION BLOCK (J/B)
INDICATOR ABS
INSTALLATION UNIT with Switch
CENTRAL ASSEMBLY BLOCK (J/B)
CENTRAL ASSEMBLY UNIT (J/B)
FUSE/RELAY BOX ON THE DRIVER SIDE (J/B)
SWITCH PROHIBITIONS START
J/C NO. 2
J/C NO. 3
J/S NO. 9
J/C NO. 7
J/C NO. 8
J/C NO. 9
SPEEDOMETER (EXCEPT 4A-FE)
SPEED SENSOR
CDIFF AUTO
Instrument Cluster
ELECTRONIC CONTROL UNIT
INTERAXLE LOCKING BLOCKS
OIL PRESSURE SWITCH
Solenoid valve
Interaxle differential-differential channel CONTROL UNIT
Courtyard
Red-One-Blue
Purple-White
White-Black
White-1 Black
Red-One
Tea
DECELERATION SENSOR (4WD)
ASSEMBLY UNIT WITH DRIVER SIDE (L/R)
GS1
GS2
GST
IG
GND
Me E6 *3
LE E62 *4
乳白色 E54 *1
黑色 D3
灰色 RE24 *3
灰色 E102 *4
乳白色 E68
黑色 E27
Wire colors
2 colors
- white
* black
** red
* brown
* purple
* yellow
# blue
* green
* pink
/ gray
Into orange
To dark gray
acidic green
transparent
Ya E54
黑色 V28
黑色 E71
黑色 VI9
乳白色 E63
青色 E65
灰色 E66
灰色 B3
Yar色 B2 4
乳白色 E67
濃灰色 B 27
濃灰色 In 25
濃灰 EM B26
黑色 E101
灰色 B14
灰色 B20
乳白色 E70
乳白色 E68

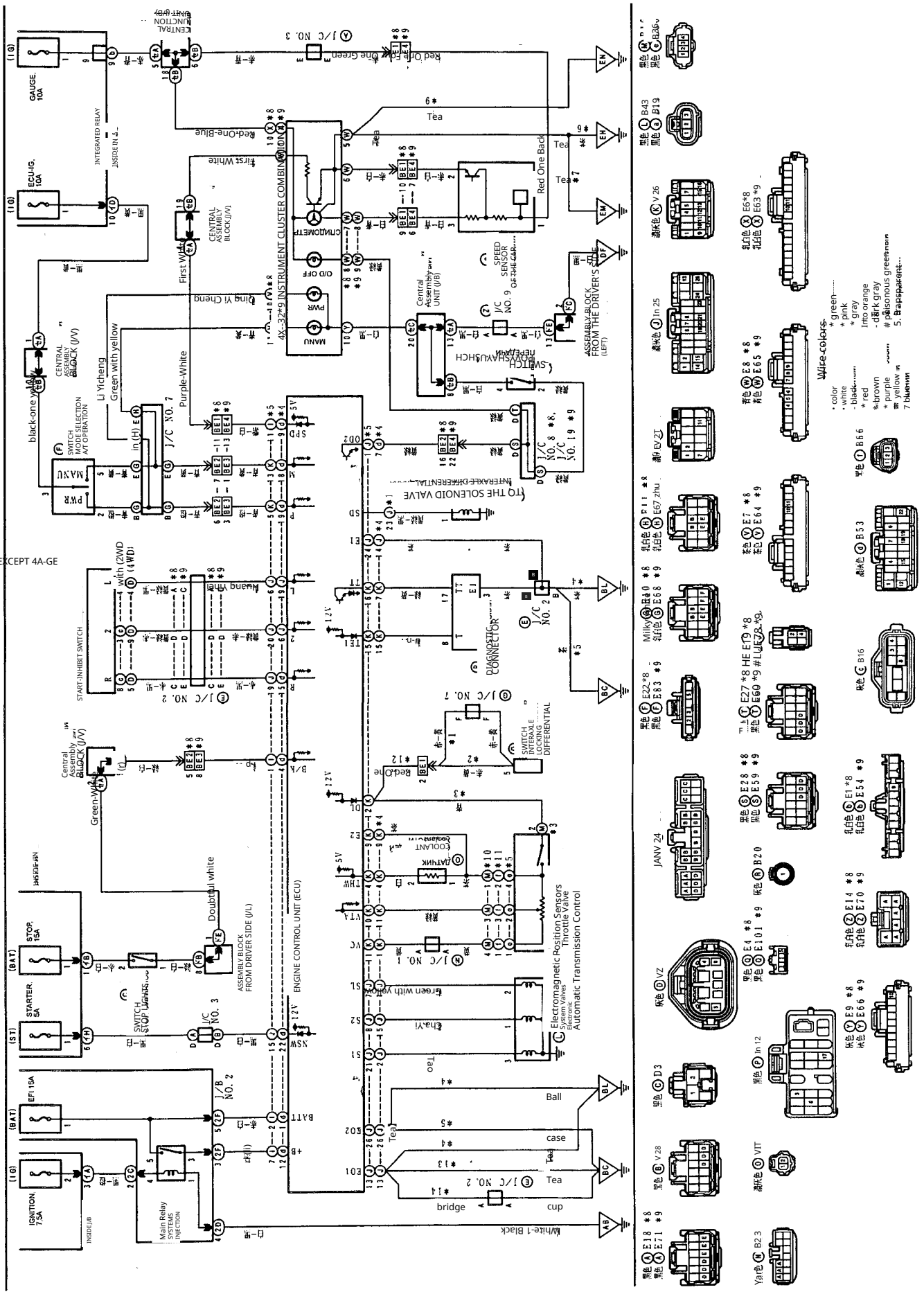
Indicators and Electronic Automatic Transmission Control System
*1 4V-TURING
*2 Z-TURING
*3 4A-FE
*7 9/95 - 9/97 4
*8 9/97 4 -
*9 9/97 4 -
*10 KP0ME 97 4 - C 4A-FE, 4A-GE
*11 9/97 4 - C 4A-FE
*12 7A-FE
*13 - 9/97 4 C 4A-FE, 7A-FE
*14 9/97 4 - C 4A-FE, 7A-FE
*15 7A-FE, 98 4 4A-FE
*EXCEPT 4A-GE
IGNITION 7.5A
EFI 15A
STARTER 5A
STOP 15A
GAUGE 10A
ECU-IG 10A
Main Relay SYSTEMS INJECTION
INTEGRATED RELAY
CENTRAL ASSEMBLY BLOCK (J/V)
SWITCH MODE SELECTION A/T OPERATION
ENGINE CONTROL UNIT (ECU)
ASSEMBLY BLOCK FROM DRIVER SIDE (J/L)
SWITCH STOP LIGHT
START-INHIBIT SWITCH
with (2WD) (4WD)
SWITCH INTERAXLE LOCKING DIFFERENTIAL
Electromagnetic Position Sensors
Throttle Valve
Electronic
System Valve
Automatic Transmission Control
INSTRUMENT CLUSTER COMBINATION
TACHOMETER
O/D OFF
PWR
MANU
SPEED SENSOR
TO THE SOLENOID VALVE
INTERAXLE DIFFERENTIAL
DIAGNOSTIC CONNECTOR
Red One Blue
Red One Green
First White
Ding Yi Cheng
Li Yicheng
Green with yellow
Purple-White
Yellow-Red
Doubtful white
Green-White
Blue-Red
Red One Black
Tea
Ball
case
bridge
cup
White-1 Black
Wire colors
* color
* white
* black
* red
* brown
* purple
* yellow
7 blue
* green
* pink
* gray
Into orange
- dark gray
poisonous green
5. transparent

4WD (up to 97.4 with automatic transmission)

*1 EXCEPT 2-TURING
*2 Z-TURING
*3 - 98.5
*4 98.5 -

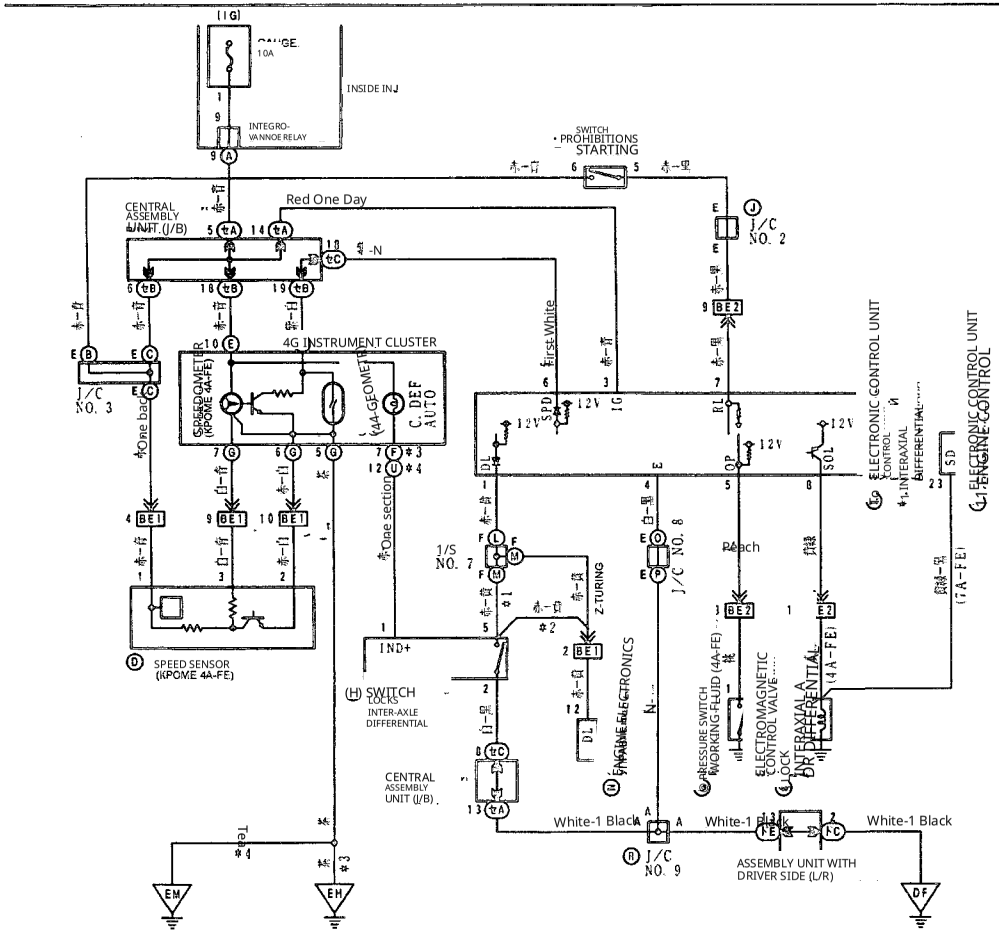

AIRBAGS (97.4-)

*1 - 98.4
*2 98.4 -

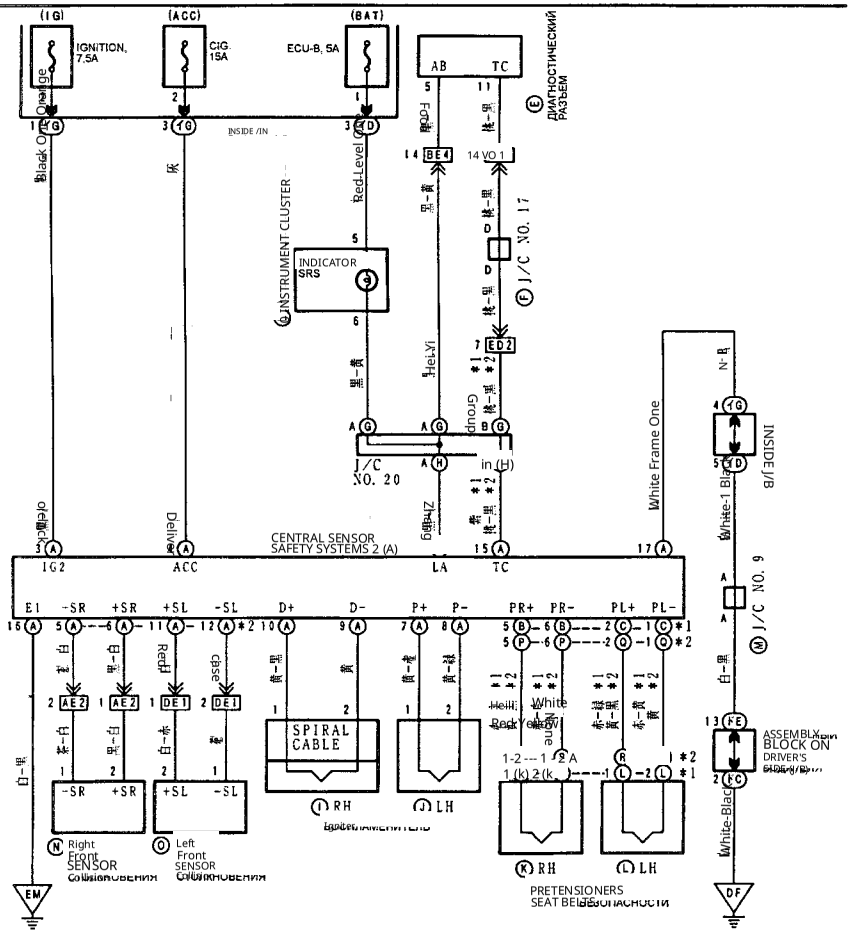

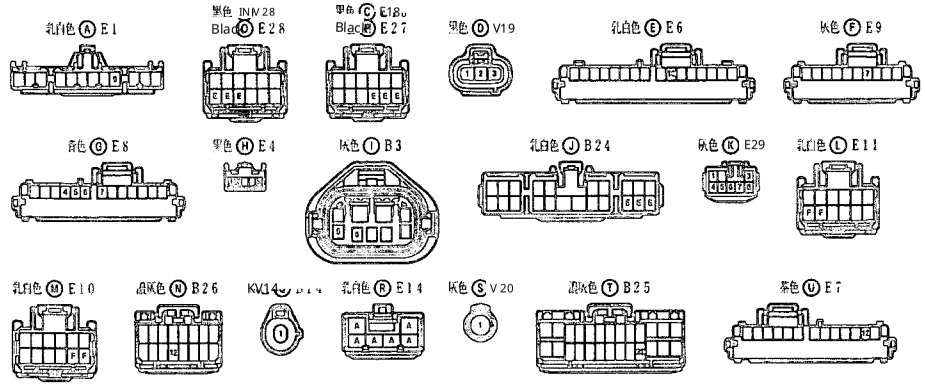

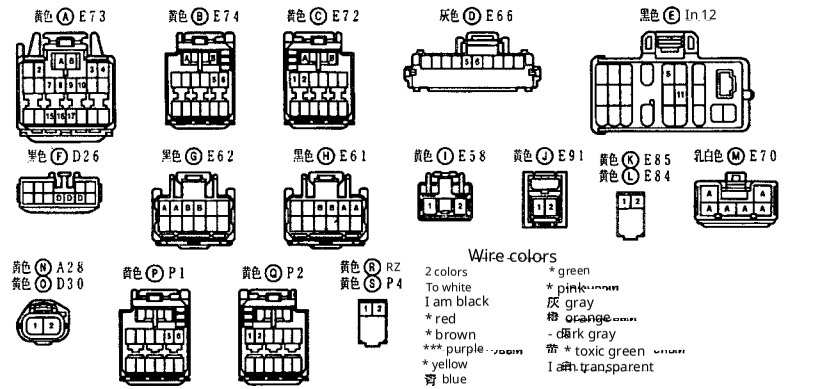

Wire colors

2 colors	* green
To white	* pink
I am black	灰 gray
* red	橙 orange
* brown	- dark gray
*** purple	蓝 * toxic green
* yellow	I am transparent
青 blue	

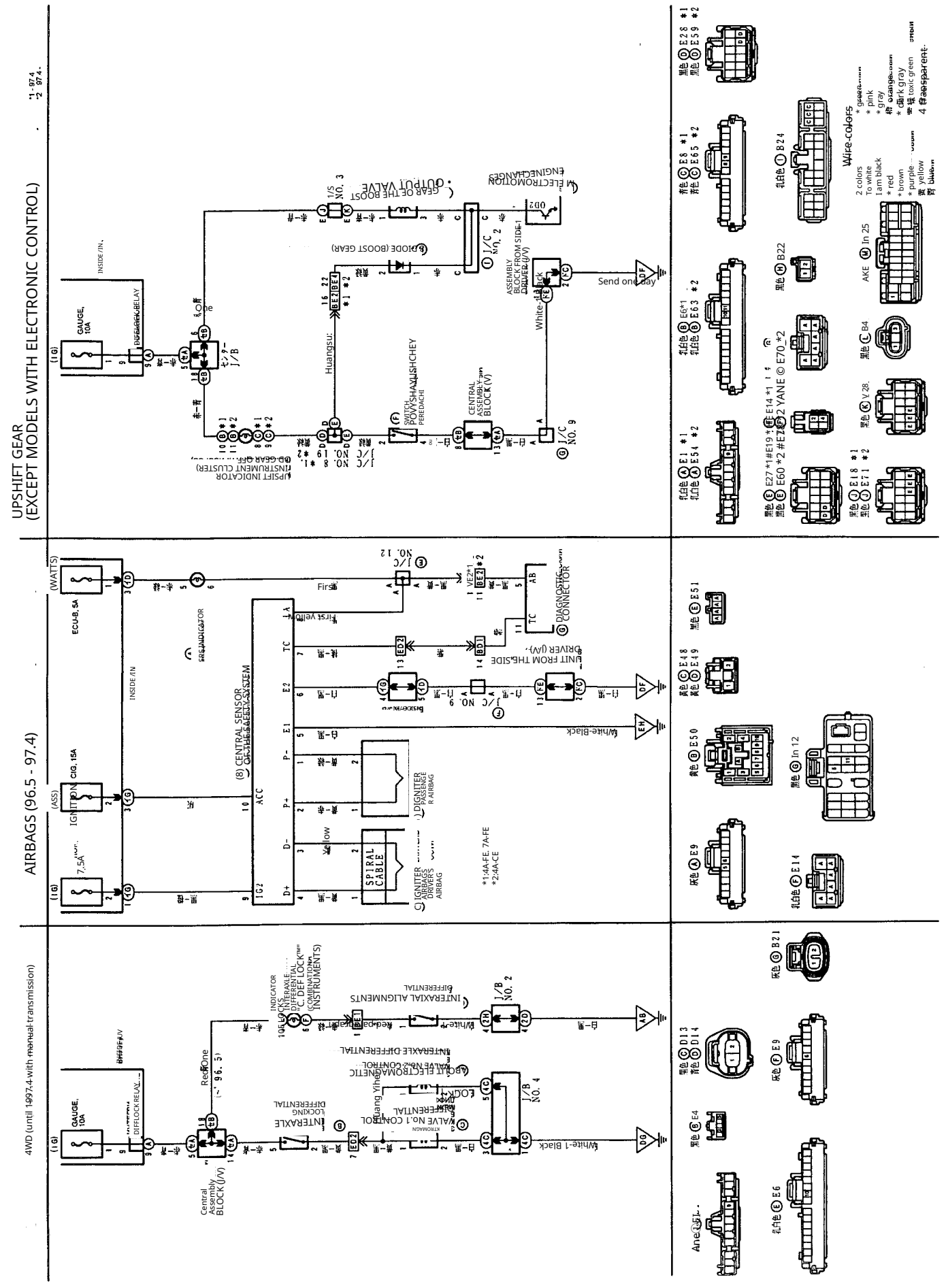
UPSHIFT GEAR
(EXCEPT MODELS WITH ELECTRONIC CONTROL)
AIRBAGS (96.5 - 97.4)
4WD (until 1997.4 with manual transmission)
Wire colors
2 colors
To white
I am black
* red
* brown
* purple
* yellow
* pink
* gray
* dark gray
4 transparent:
INSIDE /IN.
Send one day
Red One
Huangsu:
Yihuang
Green
Yellow
First
First yello
White-black
White-1 black
Red-purple
Ane USL.
SPIRAL CABLE
DIAGNOSTIC CONNECTOR
CENTRAL SENSOR
CENTRAL ASSEMBLY BLOCK (V)
Central Assembly BLOCK (J/V)
GAUGE, 10A
ECU-B, 5A
IGN, 15A
DIFFLOCK RELAY
INTERAXLE DIFFERENTIAL LOCKING
INTERAXIAL ALIGNMENTS
INTERAXLE DIFFERENTIAL
SWITCH POVYSHAYUSHCHEY PEREDACHI
DIODE (BOOST GEAR)
GEAR OF THE BOOST
OUTPUT VALVE
ELECTROMOTION ENGINE CHANGES
ASSEMBLY BLOCK FROM SIDE-1 DRIVER (J/V)
UNIT FROM THE SIDE DRIVER (J/V)
*1:4A-FE, 7A-FE
*2:4A-CE

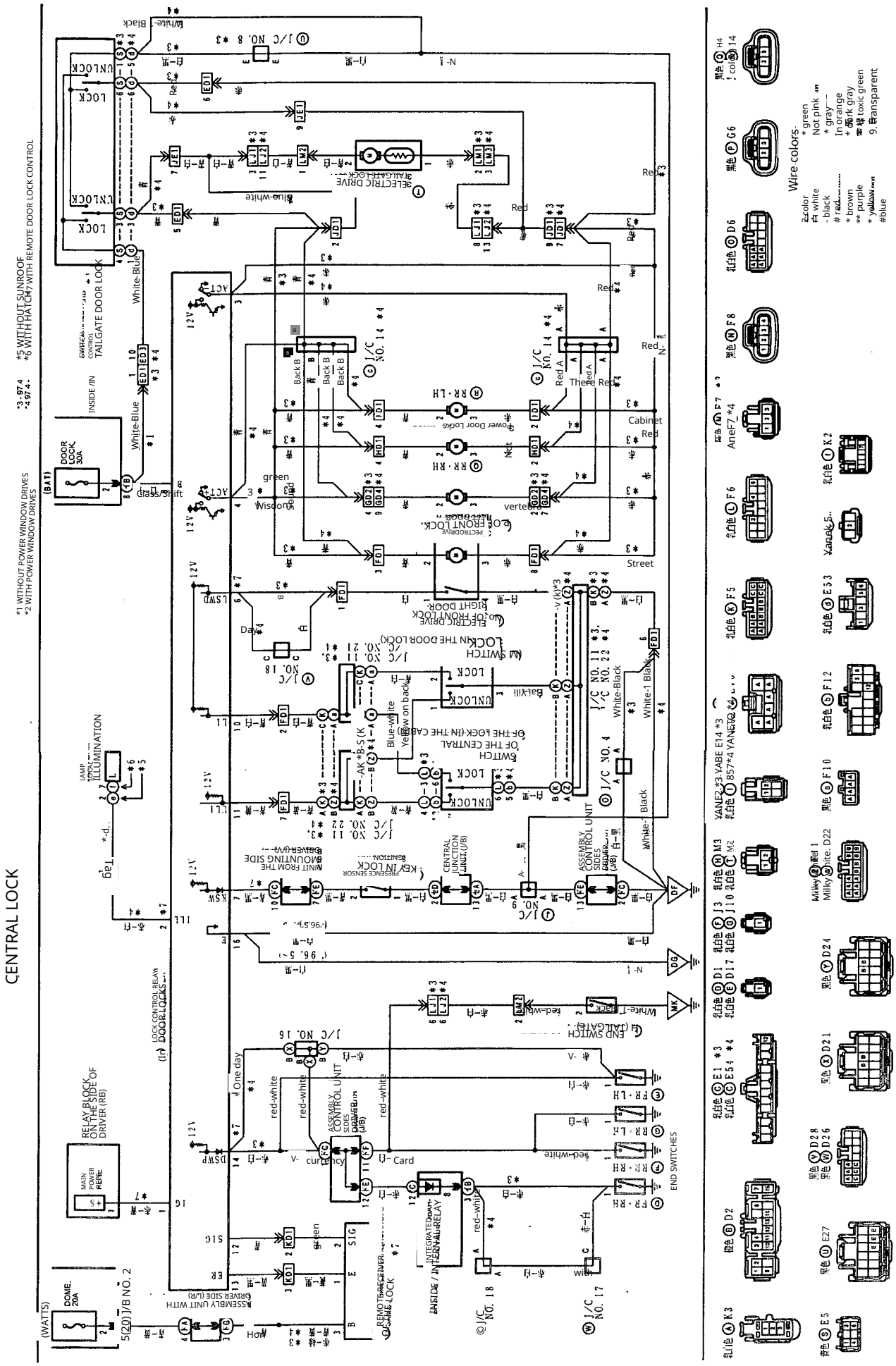
CENTRAL LOCK
*1 WITHOUT POWER WINDOW DRIVES
*2 WITH POWER WINDOW DRIVES
*5 WITHOUT SUNROOF
*6 WITH HATCH / WITH REMOTE DOOR LOCK CONTROL
Wire colors:
* green
Not pink
* gray
In orange
* brown
* purple
* yellow
#blue
DOOR LOCK 30A
DOME 20A
MAIN POWER HERE
RELAY BLOCK ON THE SIDE OF DRIVER (RB)
LOCK CONTROL RELAY
DOOR LOCKS
TAILGATE DOOR LOCK
ELECTRIC DRIVE
ASSEMBLY CONTROL UNIT SIDES
CENTRAL JUNCTION UNIT (J/B)
KEY IN LOCK
PRESENCE SENSOR
INTEGRATED RELAY
END SWITCHES
LAMP ILLUMINATION
J/C NO. 8
J/C NO. 14
J/C NO. 11
J/C NO. 22
J/C NO. 4
J/C NO. 16
J/C NO. 18
J/C NO. 17
5(20) J/B NO. 2
ASSEMBLY UNIT WITH DRIVER SIDE (L/R)
Black
White-Blue
Red
Blue-white
Green
Yellow
White-Black
White-1 Black
Black
red-white
green
Cabinet
Street
vertex
Next
Back B
Red A
Red
Blue-white
Yellow on back
Milky White-Red 1
Milky White-Blue D22
YANEF 23 YABE E14 *3
YANEF 857*4 YANEF
AneF7 *4
Yanak 5...

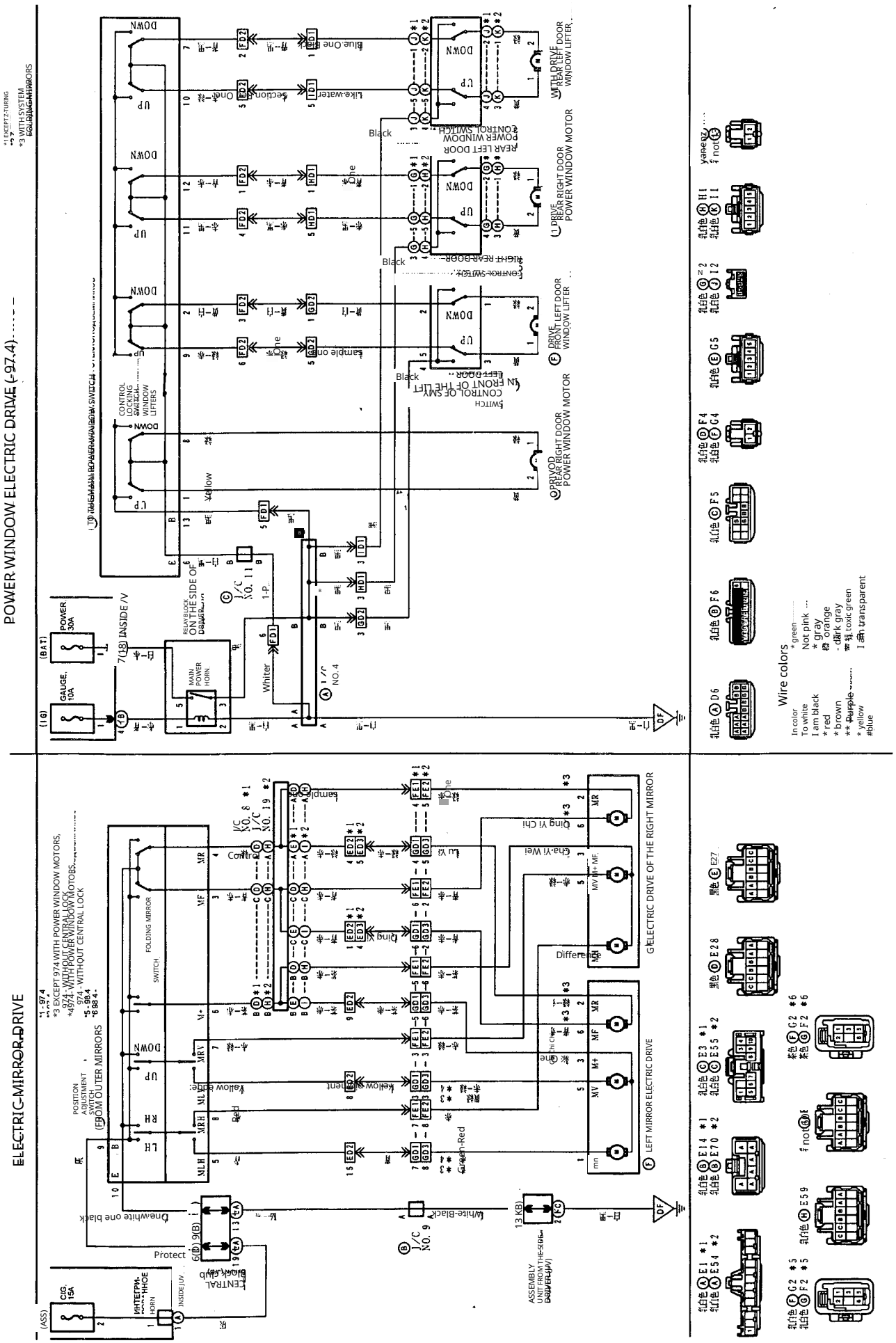
POWER WINDOW ELECTRIC DRIVE (-97.4)
ELECTRIC MIRROR DRIVE
*1: EXCEPT 2-TURBO
*2: WITH SYSTEM
*3: WITH SYSTEM
POWER WINDOW CONTROL SWITCH
CONTROL OF SWITCH IN FRONT OF THE LEFT DOOR
CONTROL LOCKING WINDOW LIFTERS
POWER WINDOW CONTROL SWITCH
REAR LEFT DOOR
REAR RIGHT DOOR
DRIVE FRONT LEFT DOOR WINDOW LIFTER
DRIVE REAR RIGHT DOOR POWER WINDOW MOTOR
DRIVE FRONT RIGHT DOOR POWER WINDOW MOTOR
DRIVE REAR LEFT DOOR WINDOW LIFTER
MAIN POWER HORN
RELAY BLOCK ON THE SIDE OF DASHBOARD
INSIDE /V
POWER 30A
GAUGE 10A
(BAT)
(IG)
Whiter
Black
Yellow
Blue One
Green One
Sample one
Lake water
Sector one
Red
Green-Red
Yellow Red
Yellow Green
Blue Yi Chi
Cheng Yi Chi
Cha Yi Wei
Differential
FOLDING MIRROR SWITCH
POSITION ADJUSTMENT SWITCH (FROM OUTER MIRRORS)
*1: 97.4
*3 EXCEPT 974 WITH POWER WINDOW MOTORS, WITH POWER CENTRAL LOCK
*4974 - WITH POWER WINDOW MOTORS
974 - WITHOUT CENTRAL LOCK
*5 - 98.4
*6 98.4 -
LEFT MIRROR ELECTRIC DRIVE
RIGHT MIRROR ELECTRIC DRIVE
CENTRAL LOCK
HORN
CIG. 15A
(ASS)
Protect
Brown-Red
Brown-White
One-White black
Wire colors
In color
To white
I am black
* red
* brown
** Purple
* yellow
#blue
* green
Not pink
* gray
orange
- dark gray
toxic green
transparent

POWER WINDOW MOTOR/DRIVE (from 97.4 -)

*1 TRIM TYPE 1
*2 TRIM TYPE 2

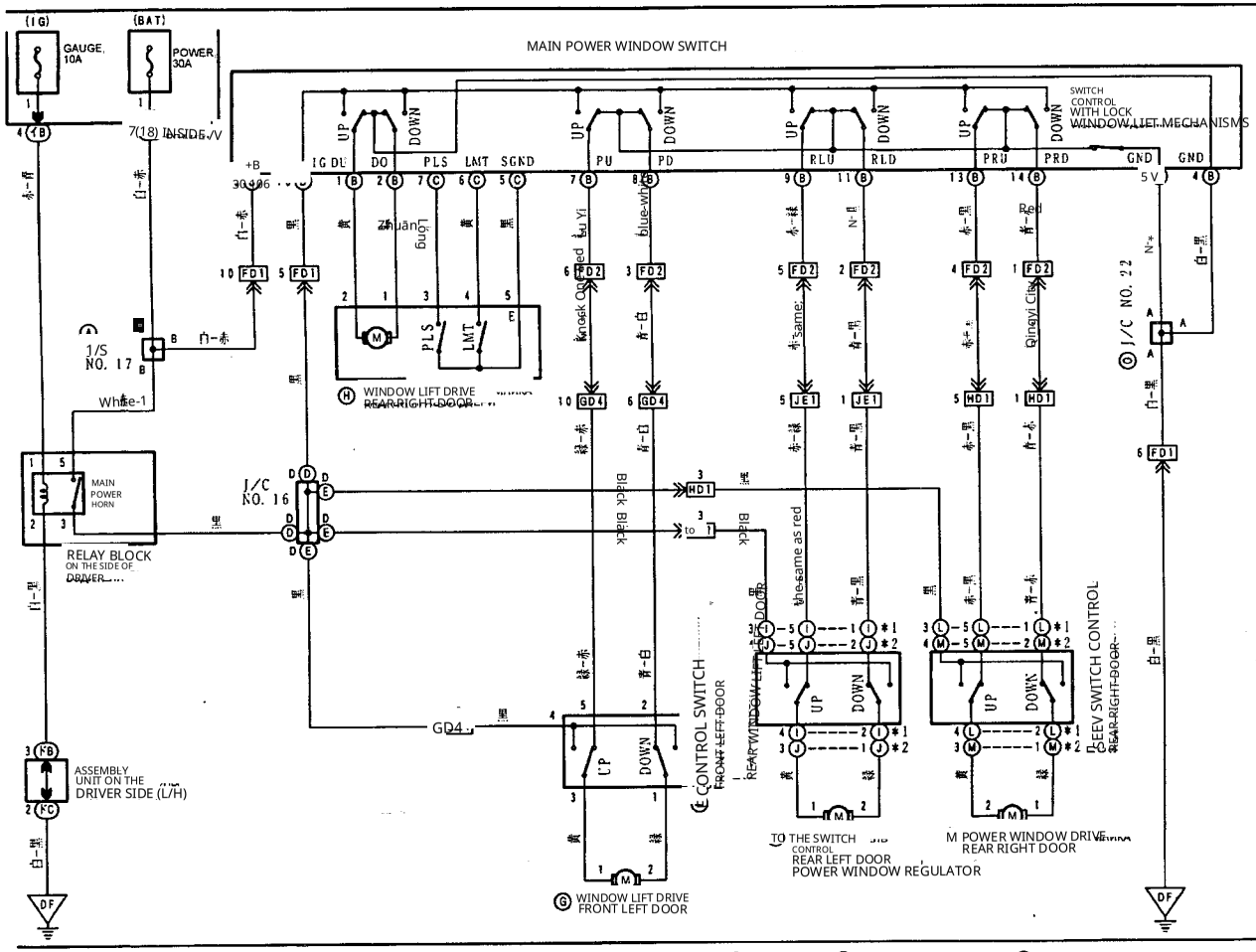

POWER SUNROOF DRIVE

*1 - 97.4
*2 97.4 -

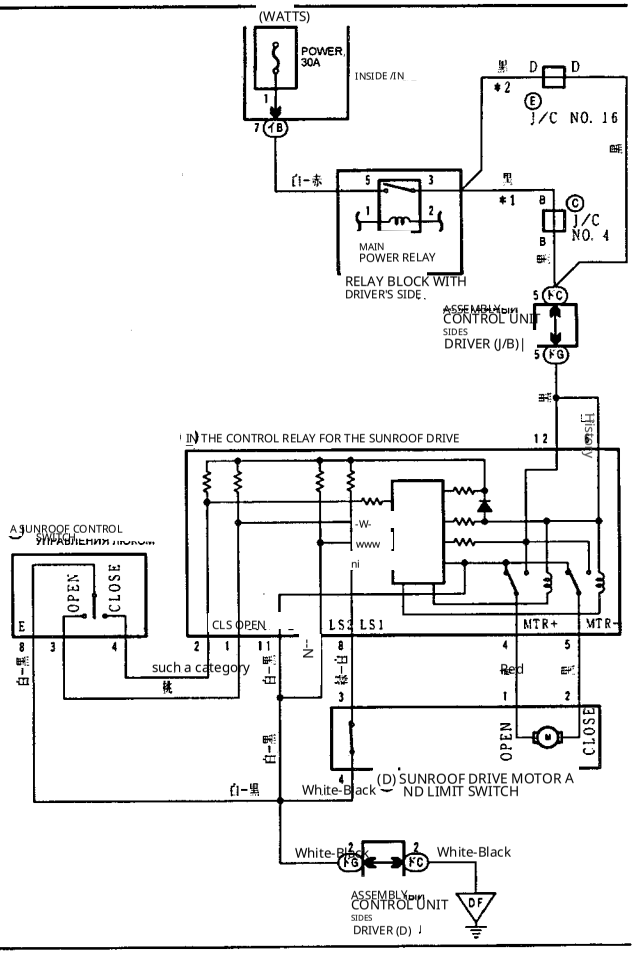

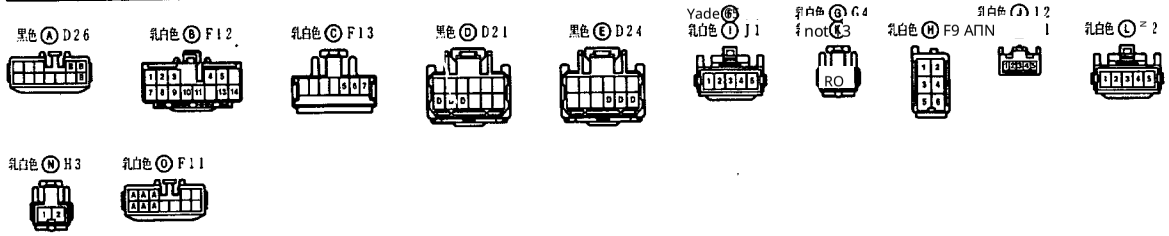

Wire colors

- * green
- * pink
- * gray
- * dark gray
- * toxic green
- 4. transparent
- * brown
- * violet
- * yellow

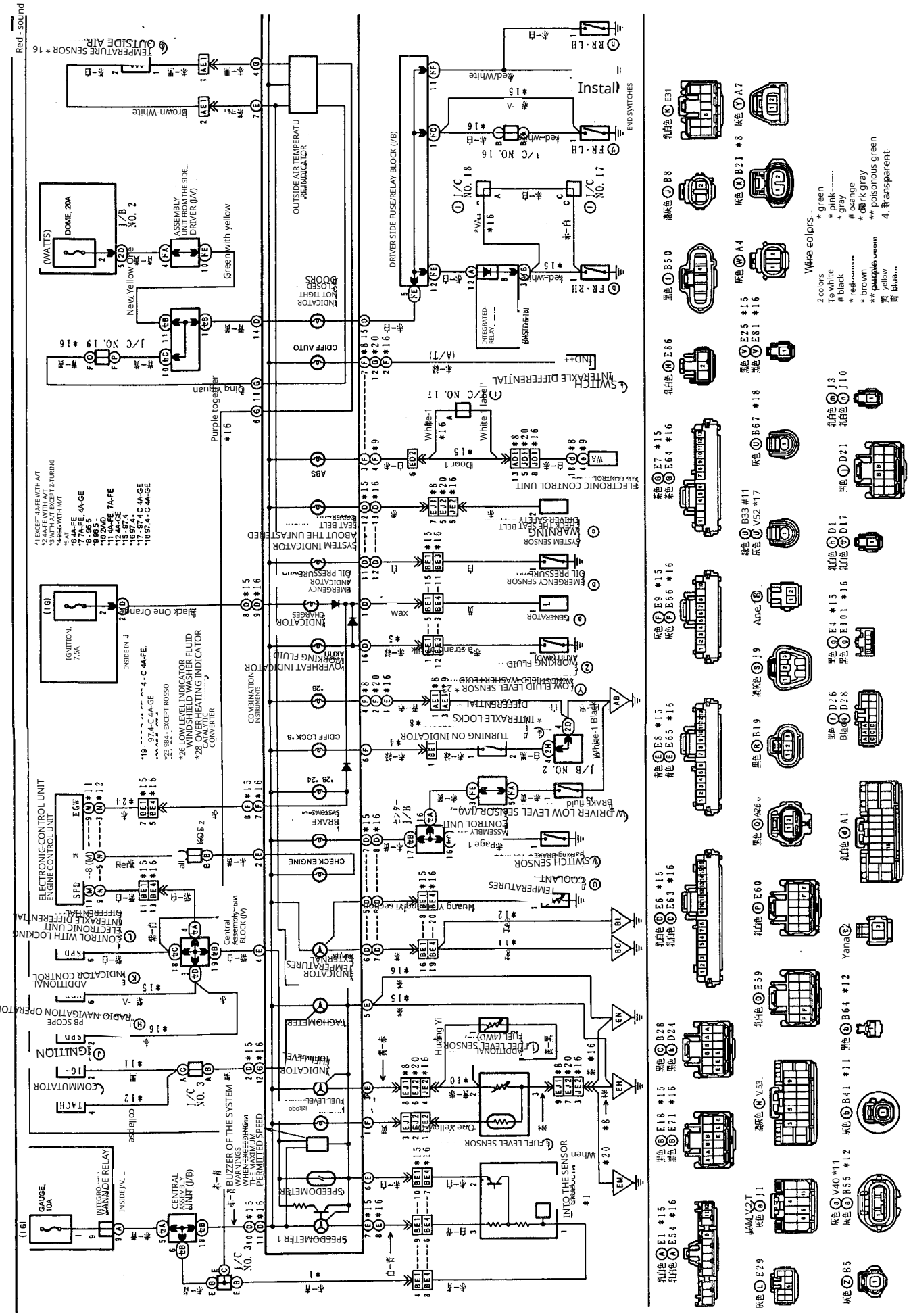
Instrument Cluster
Red - sound
TEMPERATURE SENSOR * 16
OUTSIDE AIR
Brown-White
OUTSIDE AIR TEMPERATU
DRIVER SIDE FUSE/RELAY BLOCK (J/B)
Install
END SWITCHES
DOME, 20A
ASSEMBLY UNIT FROM THE SIDE DRIVER (J/V)
New Yellow One
Green with yellow
INDICATOR NOT TIGHT DOORS
CDIFF AUTO
Purple together
SWITCH INTERAXLE DIFFERENTIAL
ELECTRONIC CONTROL UNIT
SYSTEM INDICATOR ABOUT THE UNFASTENED SEAT BELT
SYSTEM SENSOR
EMERGENCY SENSOR
OIL PRESSURE
GENERATOR
IGNITION, 7.5A
INSIDE IN J
Black One Orange
OVERHEAT INDICATOR
WORKING FLUID
LOW FLUID LEVEL SENSOR
INTERAXLE LOCKS
TURNING ON INDICATOR
COMBINATION INSTRUMENTS
CDIFF LOCK
BRAKE
CHECK ENGINE
ELECTRONIC CONTROL UNIT ENGINE CONTROL UNIT
CONTROL WITH LOCKING ELECTRONIC UNIT INTERAXLE DIFFERENTIAL
ADDITIONAL INDICATOR CONTROL
"RADIO NAVIGATION OPERATOR"
IGNITION
COMMUTATOR
Central Assembly BLOCK (J/V)
INDICATOR TEMPERATURES EXTERNAL
TACHOMETER
INDICATOR FUEL LEVEL
FUEL LEVEL SENSOR
INTO THE SENSOR
SPEEDOMETER
SPEEDOMETER 1
BUZZER OF THE SYSTEM WARNINGS WHEN EXCEEDING THE MAXIMUM PERMITTED SPEED
GAUGE, 10A
INTEGRO-WARNING RELAY
CENTRAL ASSEMBLY UNIT (J/B)
Wire colors
2 colors
To white
black
* red
* brown
** purple
* green
* pink
* gray
# orange
* dark gray
** poisonous green
4. # ansparent

INSTRUMENT CLUSTER (CONTINUED)

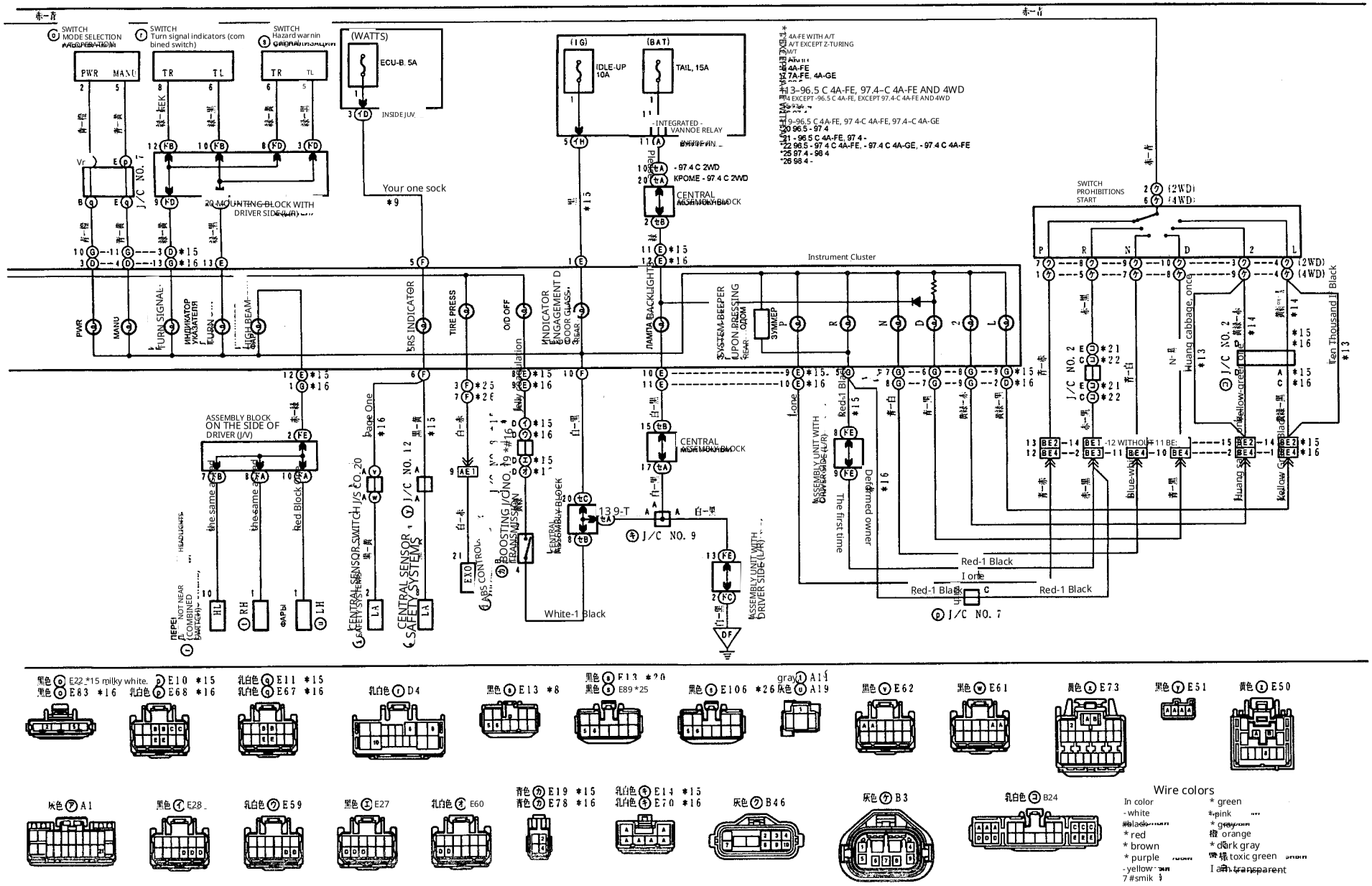

UNFASTENED SEATBELT WARNING SYSTEM

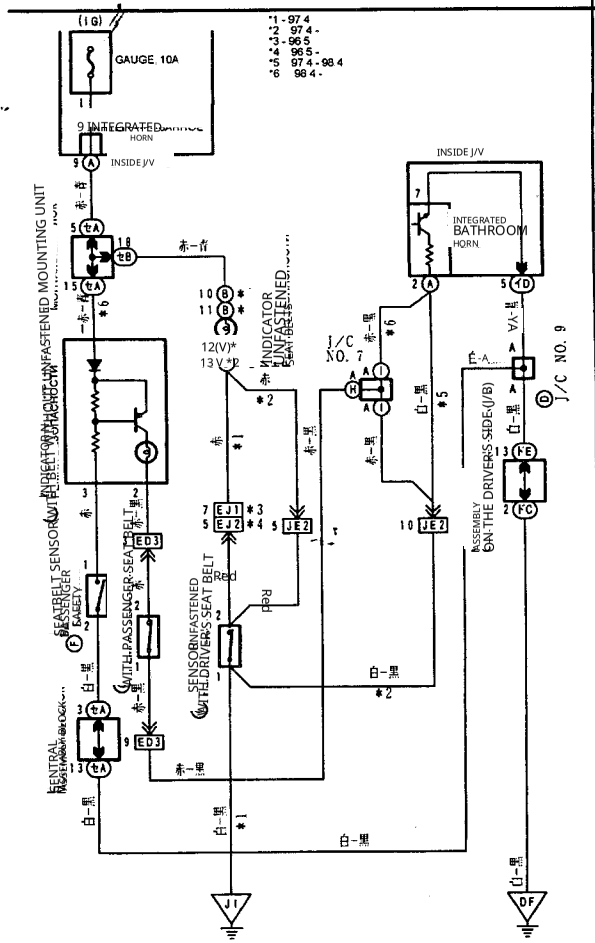

DEICER FOR WIPERS (-97.4)

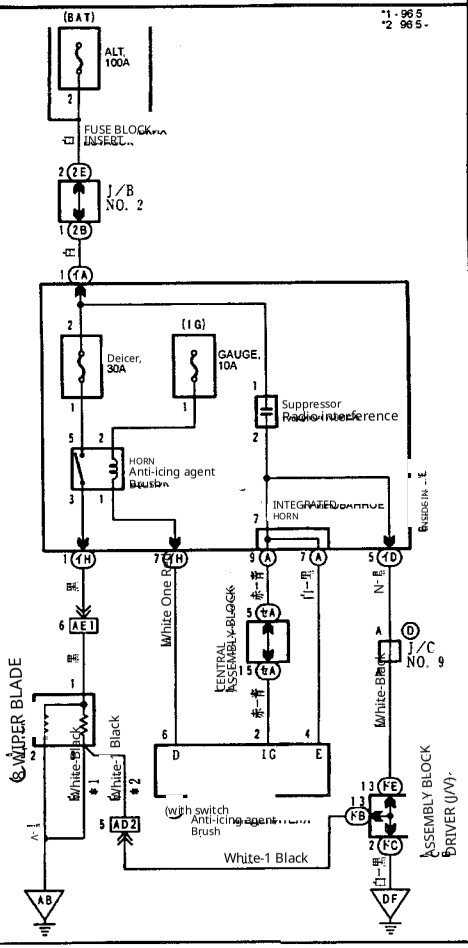

DEICER WIPERS (97.4-)

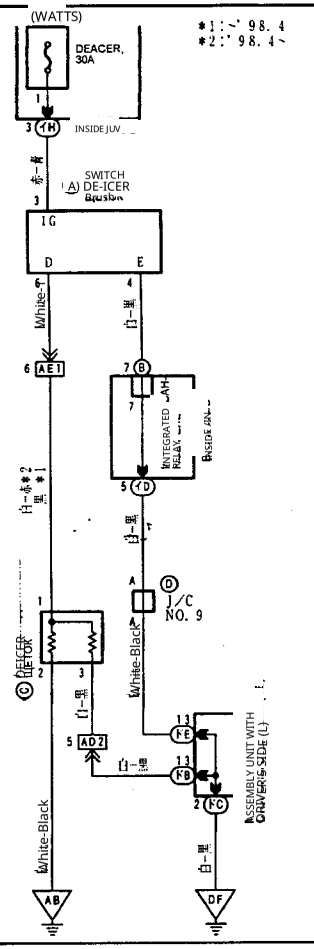

REAR WINDOW HEATER (- 97.4)

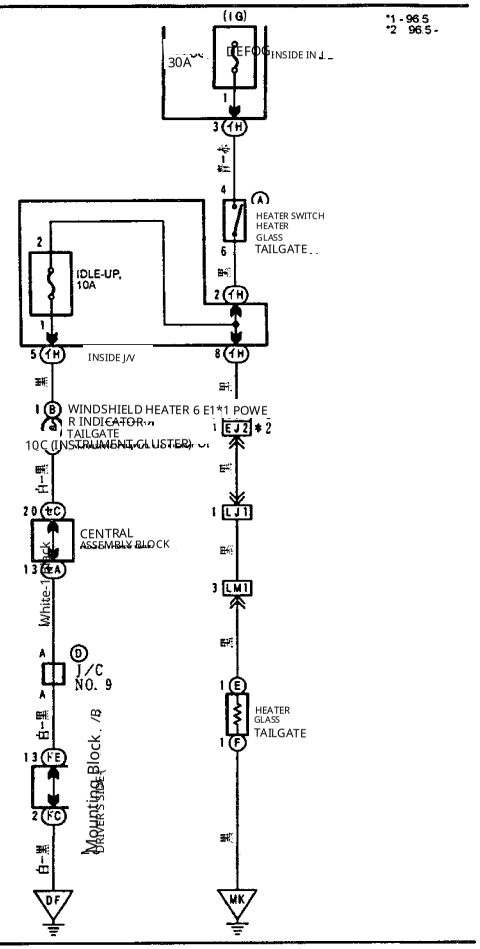

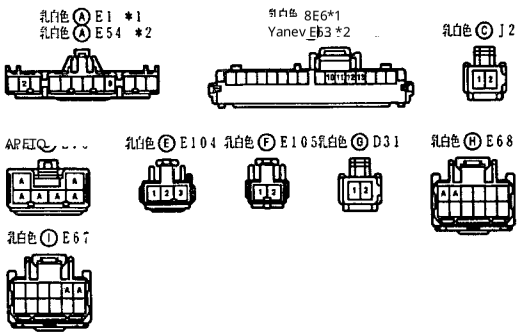

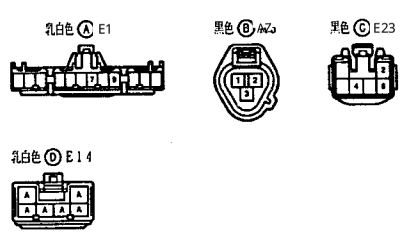

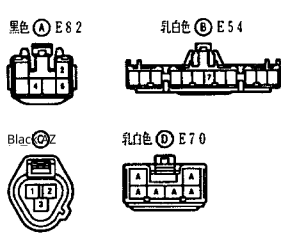

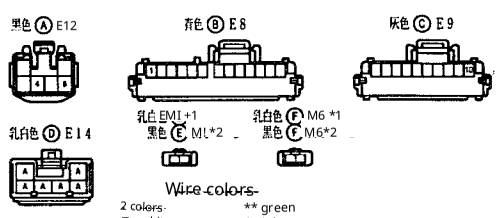

Wire colors

2 colors
To white
I am black
* red
* brown
* violet
* yellow
7 blue
** green
* pink
7 gray
* orange
• dark gray
toxic green
4. Transparent

CLOCKS

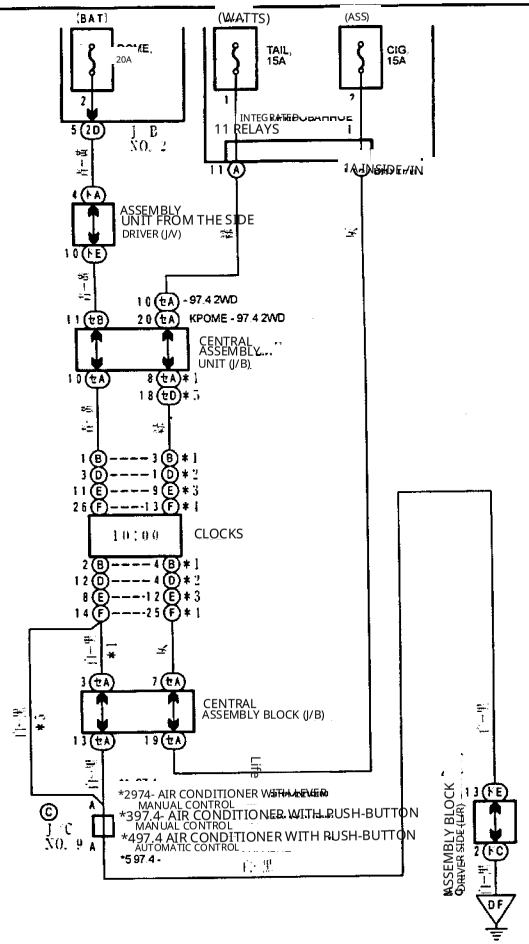

WINDSHIELD WIPER AND WASHER

*1 - 97.4
*2 97.4-

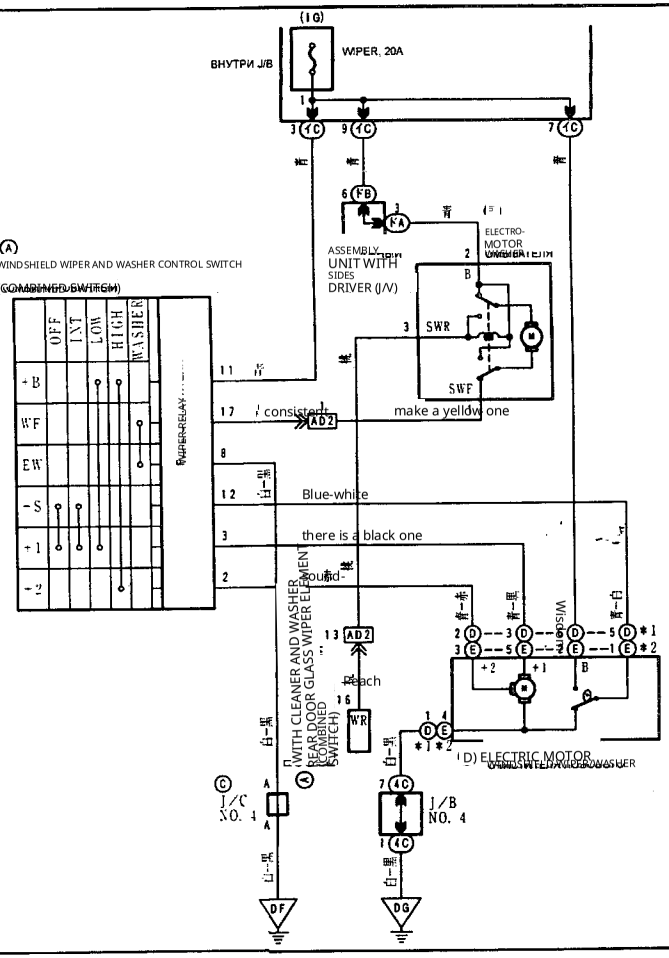

REAR DOOR GLASS WIPER AND WASHER

*1 - 97.4
*2 97.4 -
*3 - 98.4
*4 98.4 -

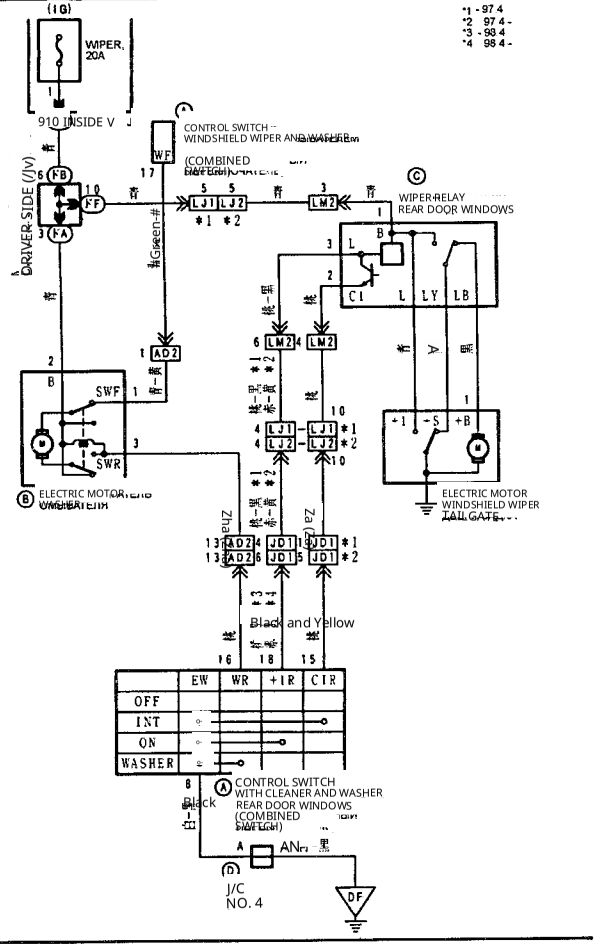

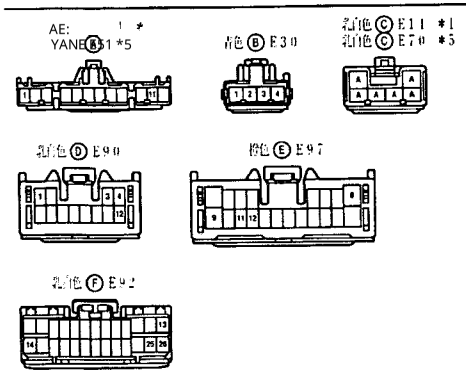

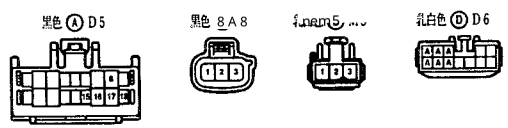

Wire colors

2 colors	* green
To white	+ pink
- black	gray
# red	5 orange
* brown	dark gray
** Purple	toxic green
* yellow	I ... transparent
# blue	

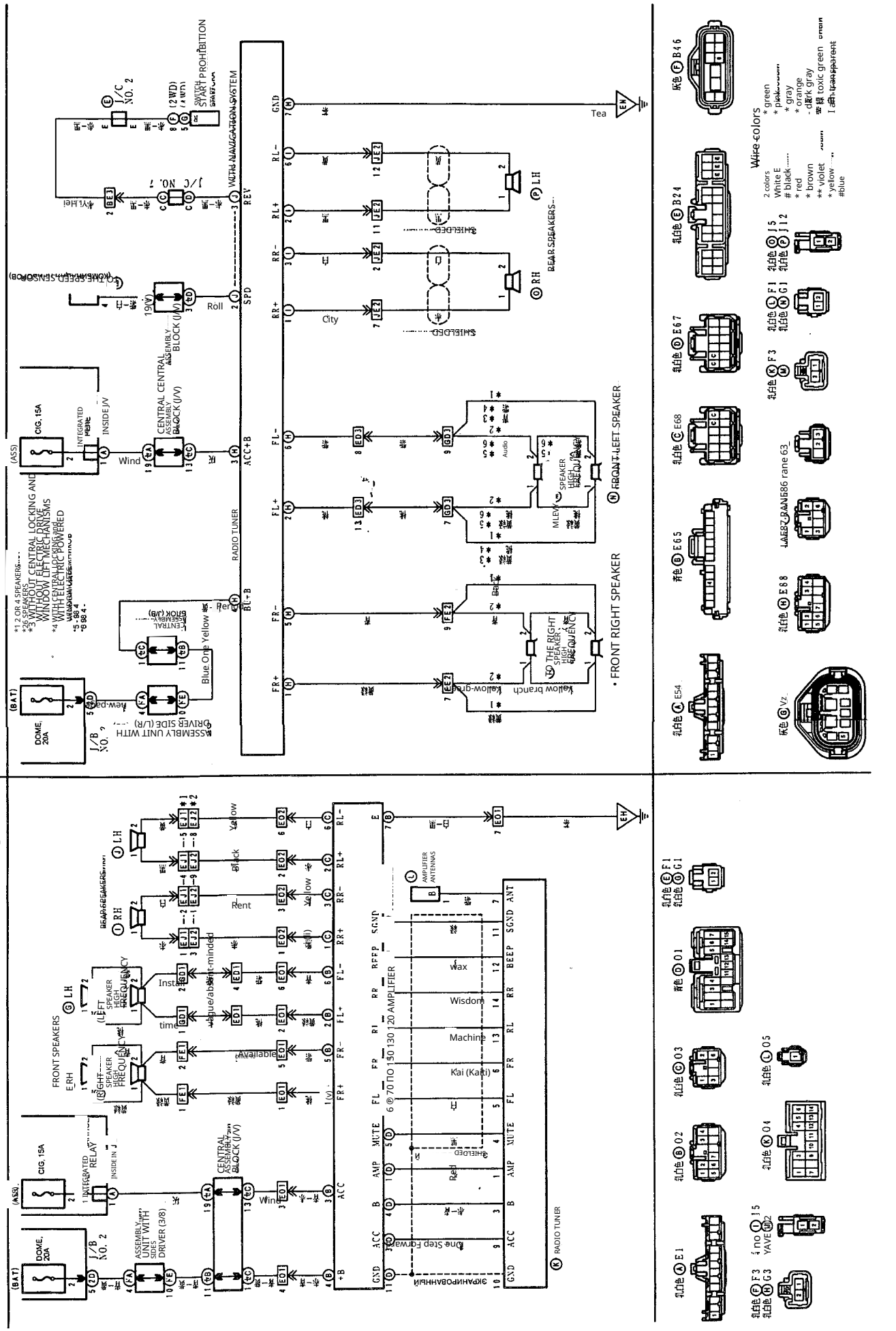
CAR STEREO (97.4 - WITH BUILT-IN AMPLIFIER) AND
NAVIGATION SYSTEM (97.4 - WITH BUILT-IN AMPLIFIER)
CAR STEREO (– 97.4 WITH AMPLIFIER)
• FRONT RIGHT SPEAKER
Wire colors
* green
* gray
* orange
* red
* brown
* yellow
#blue
RADIO TUNER
REAR SPEAKERS
FRONT SPEAKERS
CENTRAL ASSEMBLY BLOCK (J/V)
DOME, 20A
CIG, 15A
J/B NO. 2
J/C NO. 2
J/C NO. 7
Wisdom
Machine
Kai (Kaii)
Wax
Available
Instant-minded
Value/ab
time
Rent
Wind
Roll
City
Tea
Yellow
Black
Blue
Green
Brown
Red
Gray
Orange
Yellow-green
Yellow-brown
Blue-Orange
Blue-Yellow
Green-yellow
Green-red
Green-white
Green-black
Blue-red
Blue-black
Blue-white
Gray-black
Gray-red
Orange-black
Orange-white
Brown-white
Brown-red
Brown-black
Yellow-red
Yellow-black
Yellow-white
SHIELDED
WITH NAVIGATION SYSTEM
WITHOUT NAVIGATION SYSTEM
TO THE SPEED SENSOR
TO THE REVERSE SIGNAL
TO THE ILLUMINATION
TO THE ANTENNA
TO THE TAIL LIGHT
TO THE HEADLIGHT
TO THE TURN SIGNAL
TO THE BRAKE
TO THE ACCESSORY
TO THE IGNITION
TO THE BATTERY
TO THE GROUND
TO THE SPEAKER
TO THE MICROPHONE
TO THE DISPLAY
TO THE CONTROL UNIT
TO THE SENSOR
TO THE SWITCH
TO THE RELAY
TO THE FUSE
TO THE CONNECTOR
TO THE TERMINAL
TO THE WIRE
TO THE CABLE
TO THE HARNESS
TO THE GROUND
TO THE BATTERY
TO THE IGNITION
TO THE ACCESSORY
TO THE BRAKE
TO THE TURN SIGNAL
TO THE HEADLIGHT
TO THE TAIL LIGHT
TO THE ANTENNA
TO THE ILLUMINATION
TO THE REVERSE SIGNAL
TO THE SPEED SENSOR

HEADLIGHTS

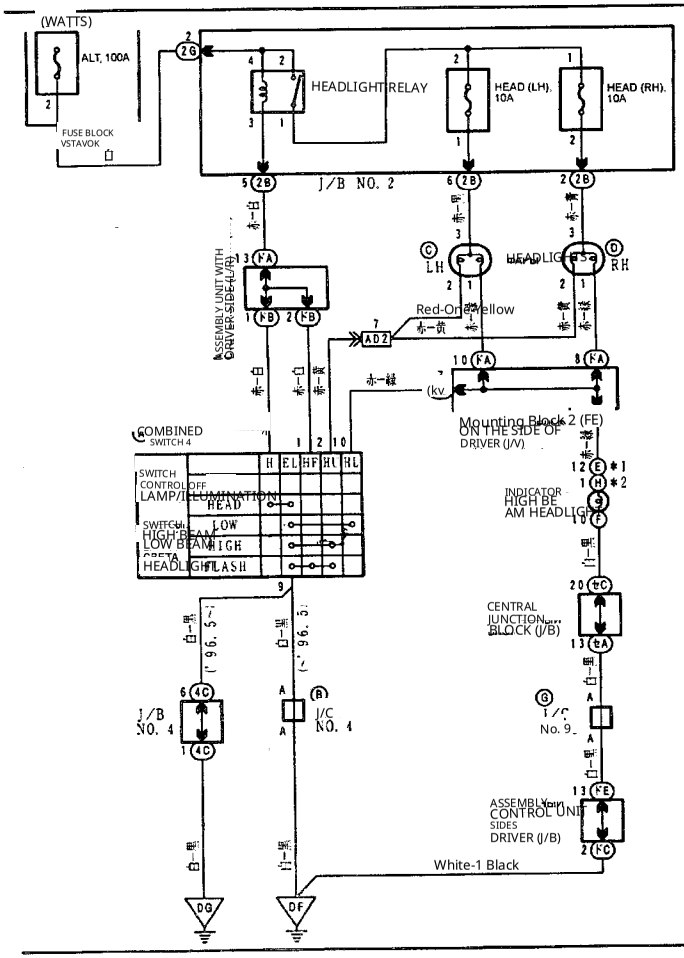

FOGLIGHTS

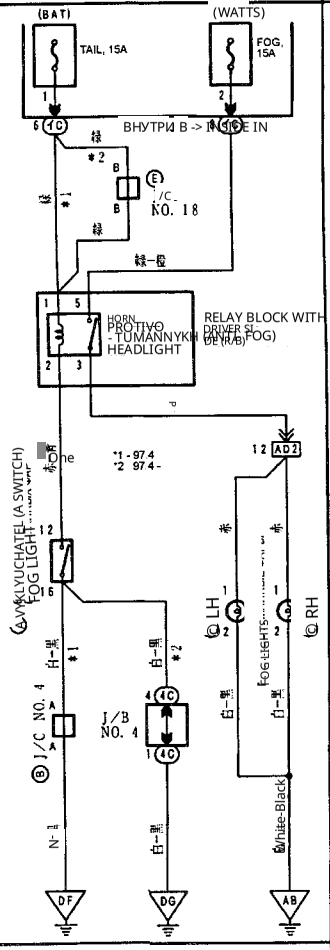

SYSTEM FOR WARNING ABOUT A KEY LEFT IN THE IGNITION SWITCH AND HEADLIGHTS LEFT ON...

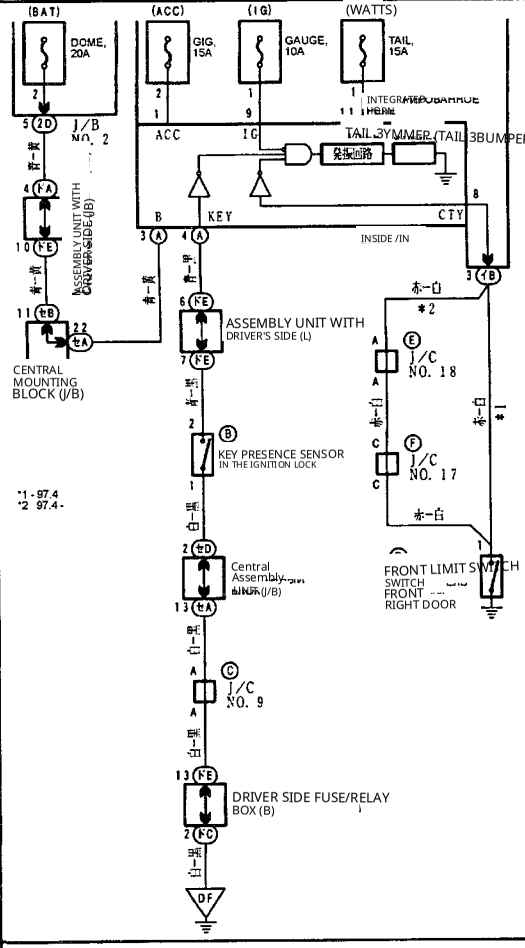

GROUNDING

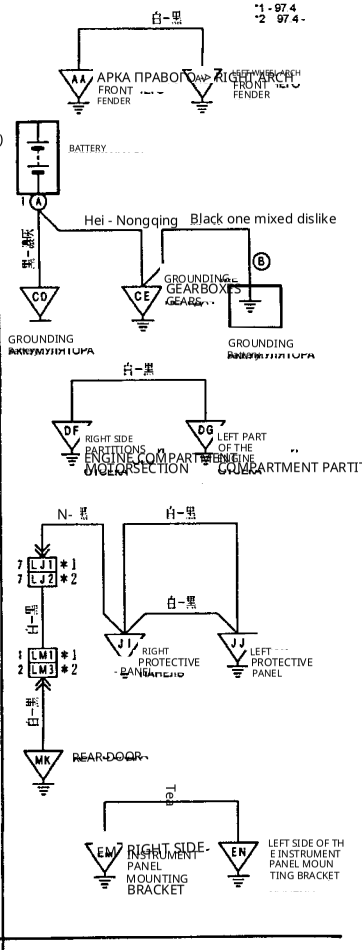

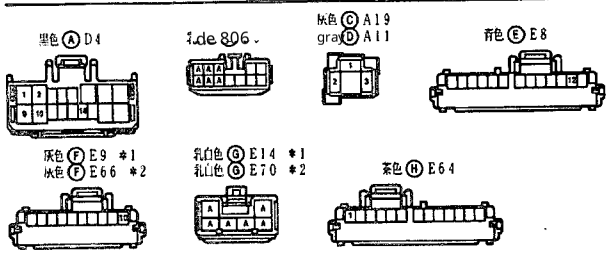

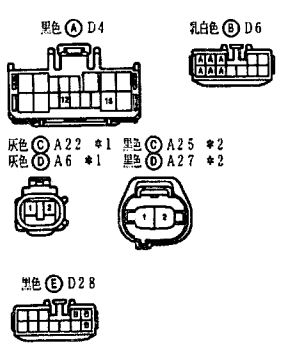

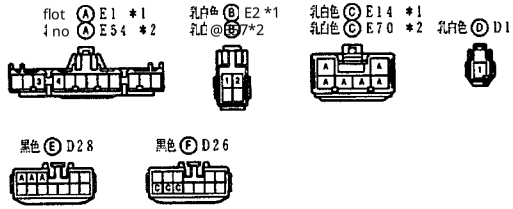

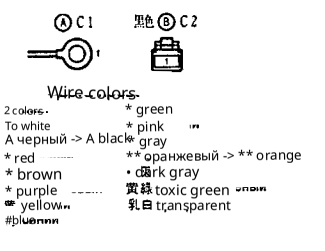

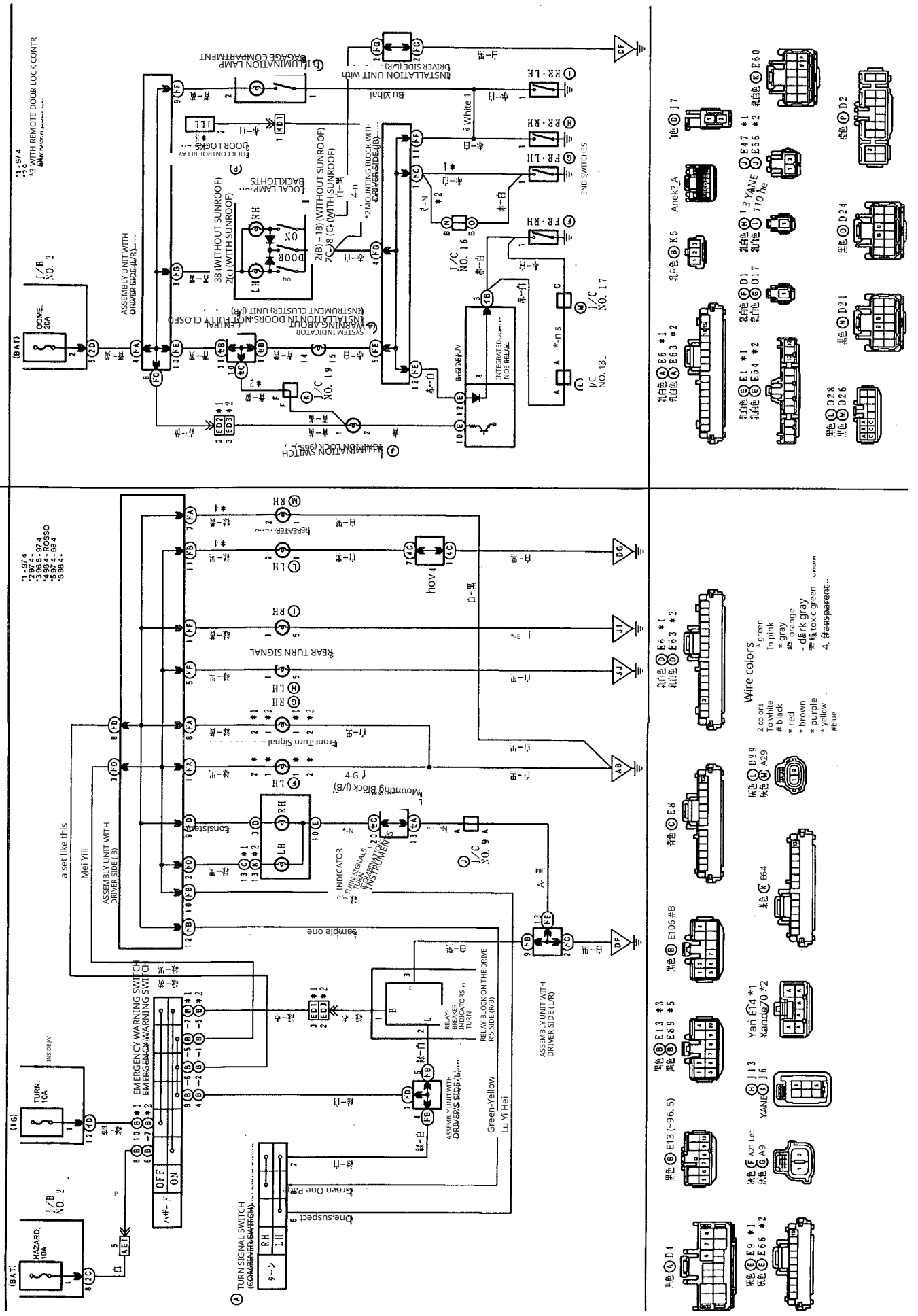
INTERIOR LIGHTING
TURN SIGNALS AND HAZARD WARNING
Wire colors
* green
In pink
* gray
orange
- dark gray
toxic green
4. Transparent
2 colors
To white
black
* red
* brown
* purple
* yellow
#blue
REAR TURN SIGNAL
Mounting Block (J/B)
ASSEMBLY UNIT WITH DRIVER SIDE (J/B)
ASSEMBLY UNIT WITH DRIVER SIDE (L/R)
TURN SIGNAL SWITCH
EMERGENCY WARNING SWITCH
RELAY BLOCK ON THE DRIVE R'S SIDE (R/B)
INSTRUMENT CLUSTER
END SWITCHES
BACKLIGHTS
DOOR LOCK CONTROL RELAY
INSTALLATION UNIT with
INTEGRATED-COMM-NODE RELAY
Green-Yellow
Lu Yi Hei
Mei Yili
a set like this
Green One Page
One.suspect
Sample one

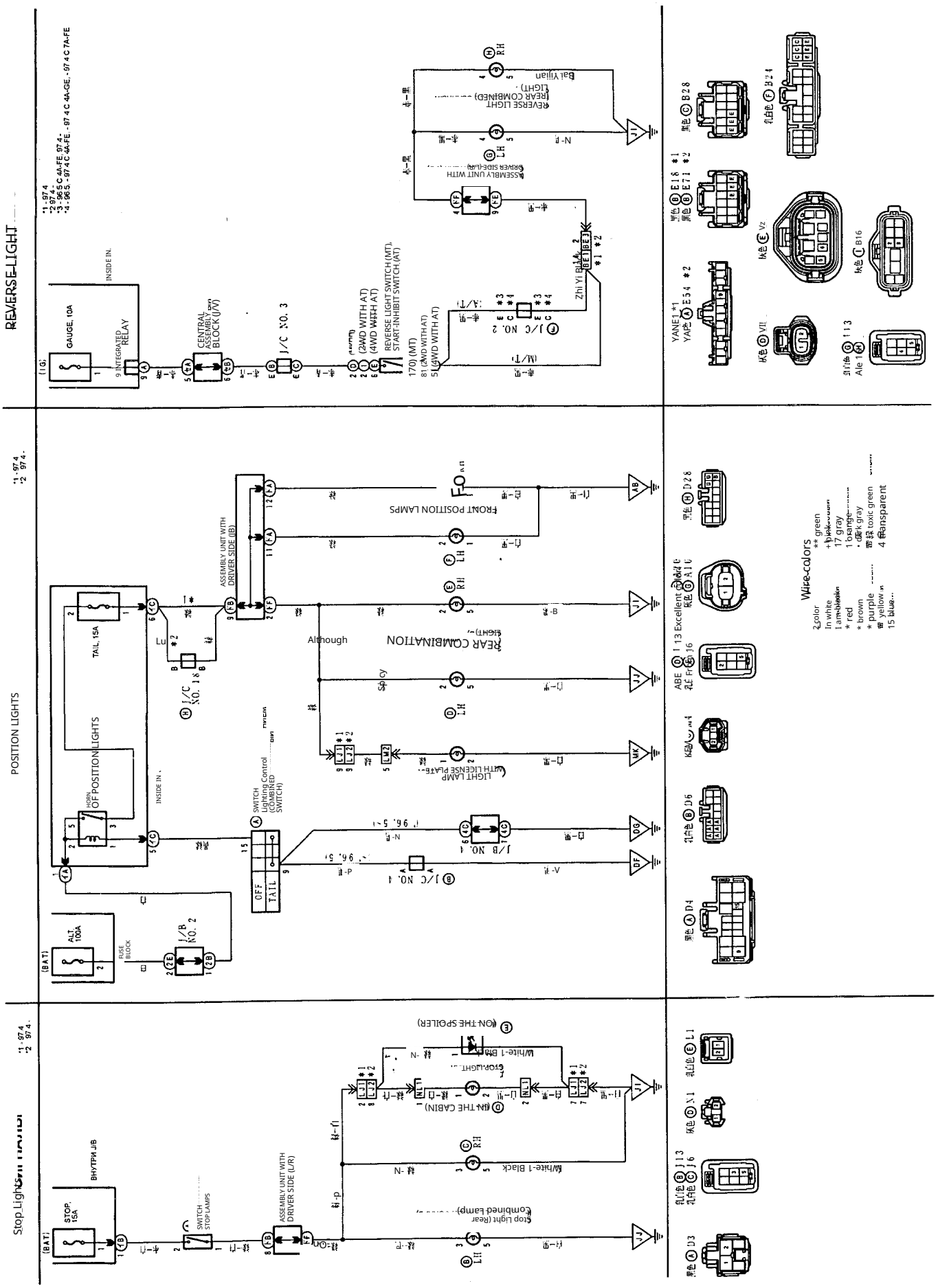
REVERSE LIGHT
POSITION LIGHTS
Stop Light
*1 - 97.4
*2 97.4-
*1 - 97.4
*2 97.4-
*3 - 96.5 C 4A-FE, 97.4-
*4 - 96.5 - 97.4 C 4A-FE, - 97.4 C 4A-GE, - 97.4 C 7A-FE
GAUGE, 10A
INTEGRATED RELAY
CENTRAL ASSEMBLY BLOCK (J/V)
J/C NO. 3
REVERSE LIGHT SWITCH (MT), START-INHIBIT SWITCH (AT)
J/C NO. 2
REAR COMBINATION LIGHT
FRONT POSITION LAMPS
TAIL, 15A
OFF POSITION LIGHTS
SWITCH Lighting Control (COMBINED SWITCH)
J/B NO. 4
J/C NO. 1
J/C NO. 18
ALT 100A
J/B NO. 2
STOP 15A
SWITCH STOP LAMPS
ASSEMBLY UNIT WITH DRIVER SIDE (J/V)
ASSEMBLY UNIT WITH DRIVER SIDE (J/R)
Wire colors
B black
G green
L blue
O orange
R red
Br brown
P purple
Y yellow
W white
Gr gray
LG light green
SB sky blue
V violet
Lg light gray
Or orange
Although
Excellent
Fr
Ale
Yap

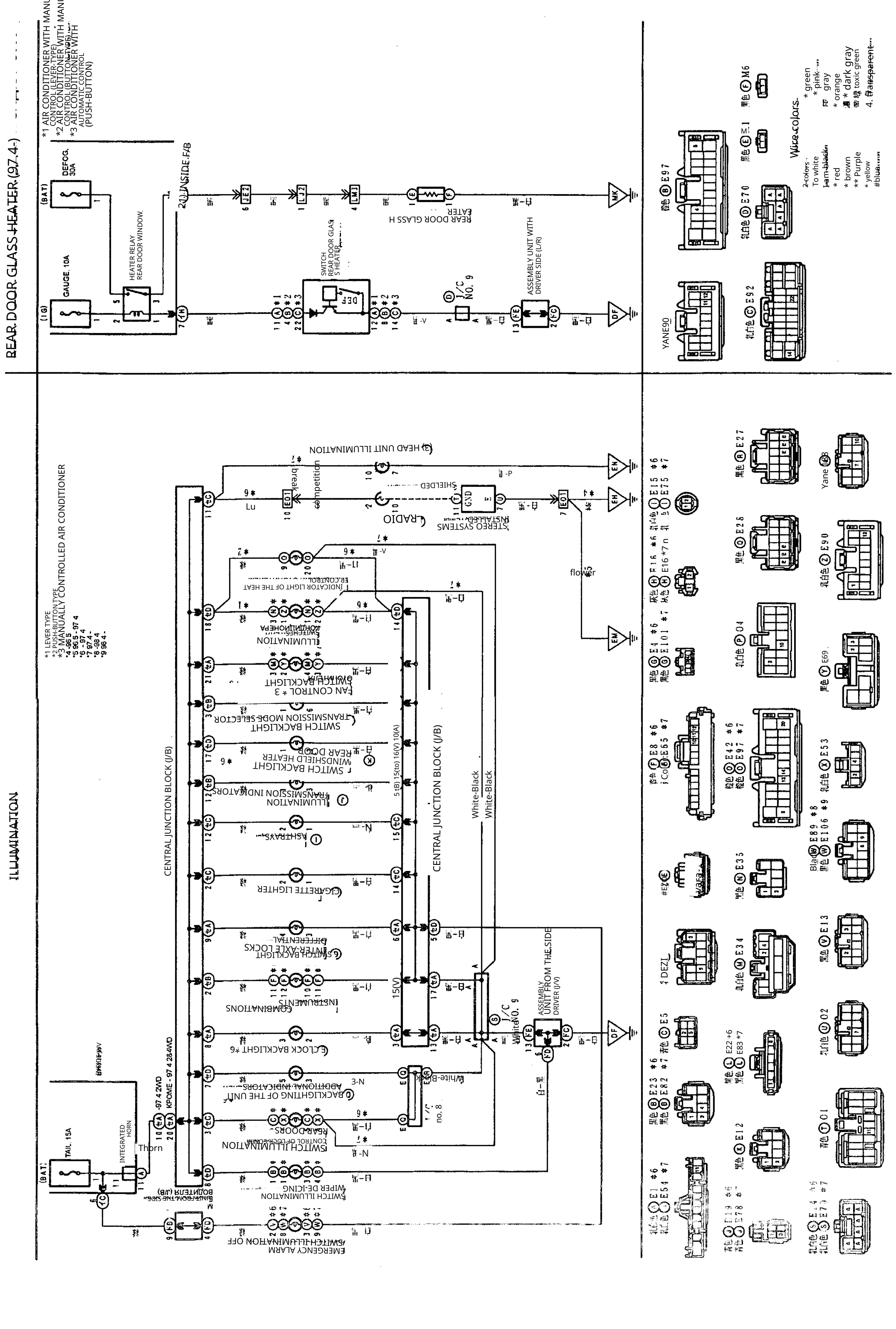
REAR DOOR GLASS HEATER (97.4-)
*1 AIR CONDITIONER WITH MANUAL CONTROL (LEVER-TYPE)
*2 AIR CONDITIONER WITH MANUAL CONTROL (BUTTON-TYPE)
*3 AIR CONDITIONER WITH AUTOMATIC CONTROL (PUSH-BUTTON)
GAUGE, 10A
DEFOG, 30A
HEATER RELAY REAR DOOR WINDOW
REAR DOOR GLASS HEATER
ASSEMBLY UNIT WITH DRIVER SIDE (L/R)
ILLUMINATION
*1 LEVER TYPE
*2 PUSH-BUTTON TYPE
*3 MANUALLY CONTROLLED AIR CONDITIONER
TAIL, 15A
INTEGRATED HORN
CENTRAL JUNCTION BLOCK (J/B)
CIGARETTE LIGHTER
ASHTRAYS
HEAD UNIT ILLUMINATION
RADIO
STEREO SYSTEMS
SHIELDED
EMERGENCY ALARM SWITCH ILLUMINATION OFF
WIPER DE-ICING SWITCH ILLUMINATION
REAR DOORS SWITCH ILLUMINATION
CLOCK BACKLIGHT *6
COMBINATIONS INSTRUMENTS
TRANSMISSION INDICATORS ILLUMINATION
WINDSHIELD HEATER SWITCH BACKLIGHT
TRANSMISSION MODE SELECTOR SWITCH BACKLIGHT
FAN CONTROL *3 SWITCH BACKLIGHT
ASSEMBLY UNIT FROM THE SIDE DRIVER (J/V)
Wire colors

air conditioner with manual control (lever)

*1 - 96.5 *3 - 97.4 *5 - 96.5 *7 - 98.4
*2 96.5 - *4 97.4 - *6 96.5 - *8 98.4 -

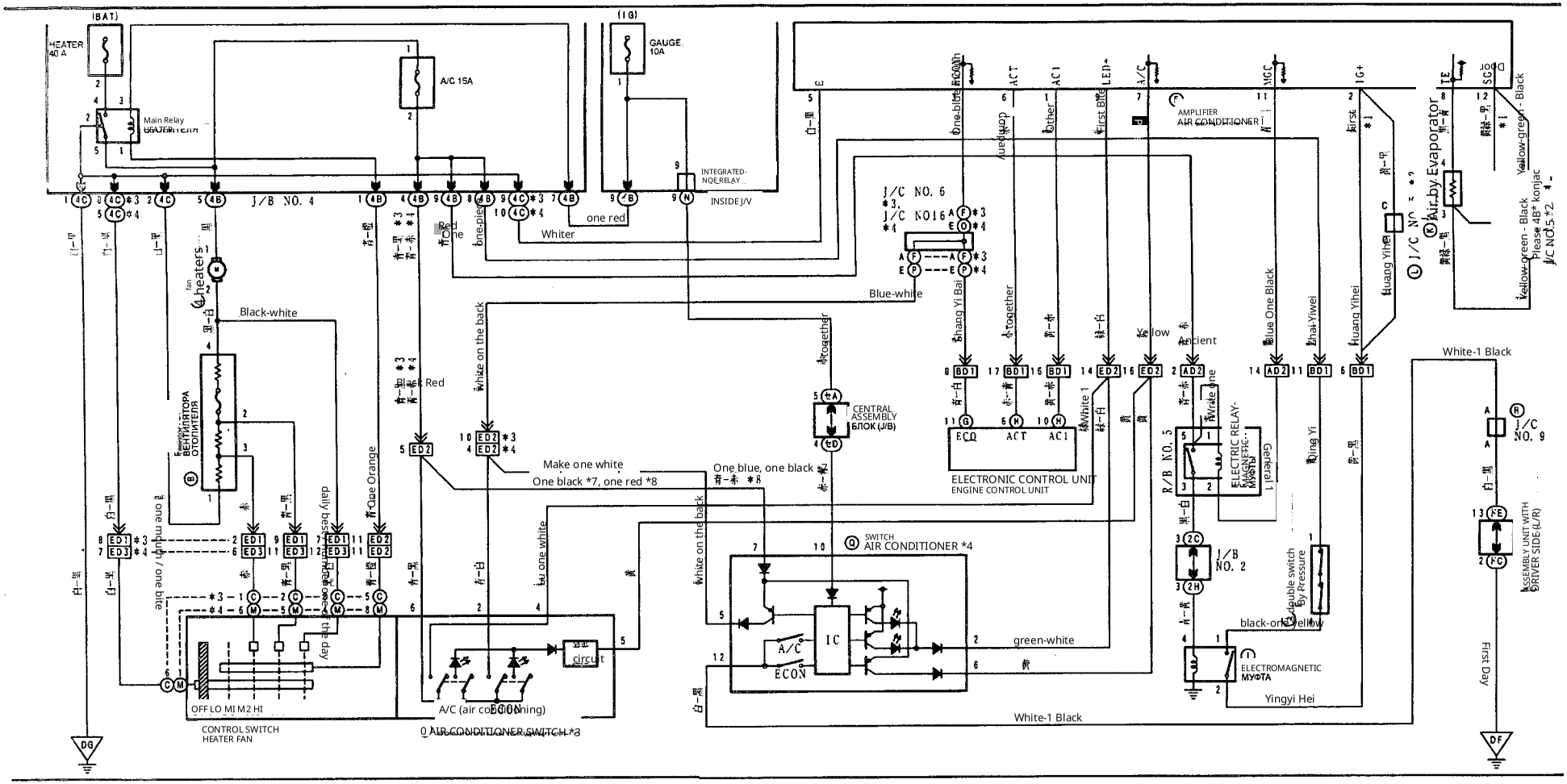

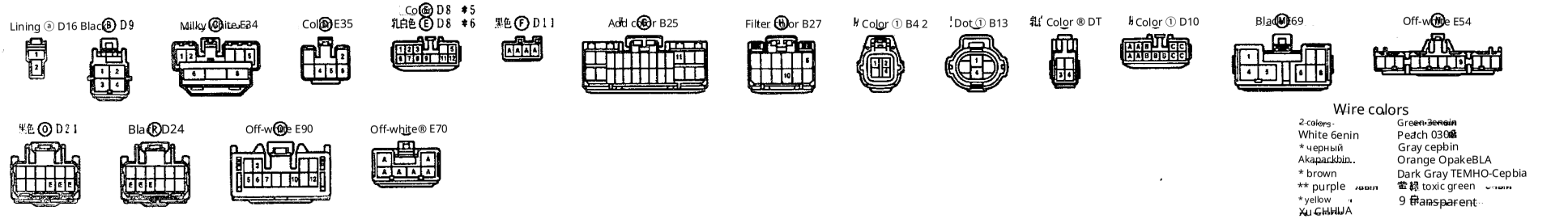

Wire colors

2-colors	Green-3enain
White 6enin	Peach 030
* черный	Gray cepbin
Akapackbin	Orange OpakeBLA
* brown	Dark Gray TEMHO-Cepbia
** purple	toxic green
* yellow	9 transparent
Xu CHHUA	

AUTOMATIC CLIMATE CONTROL AIR CONDITIONER (UP TO 97.4, BUTTON TYPE)

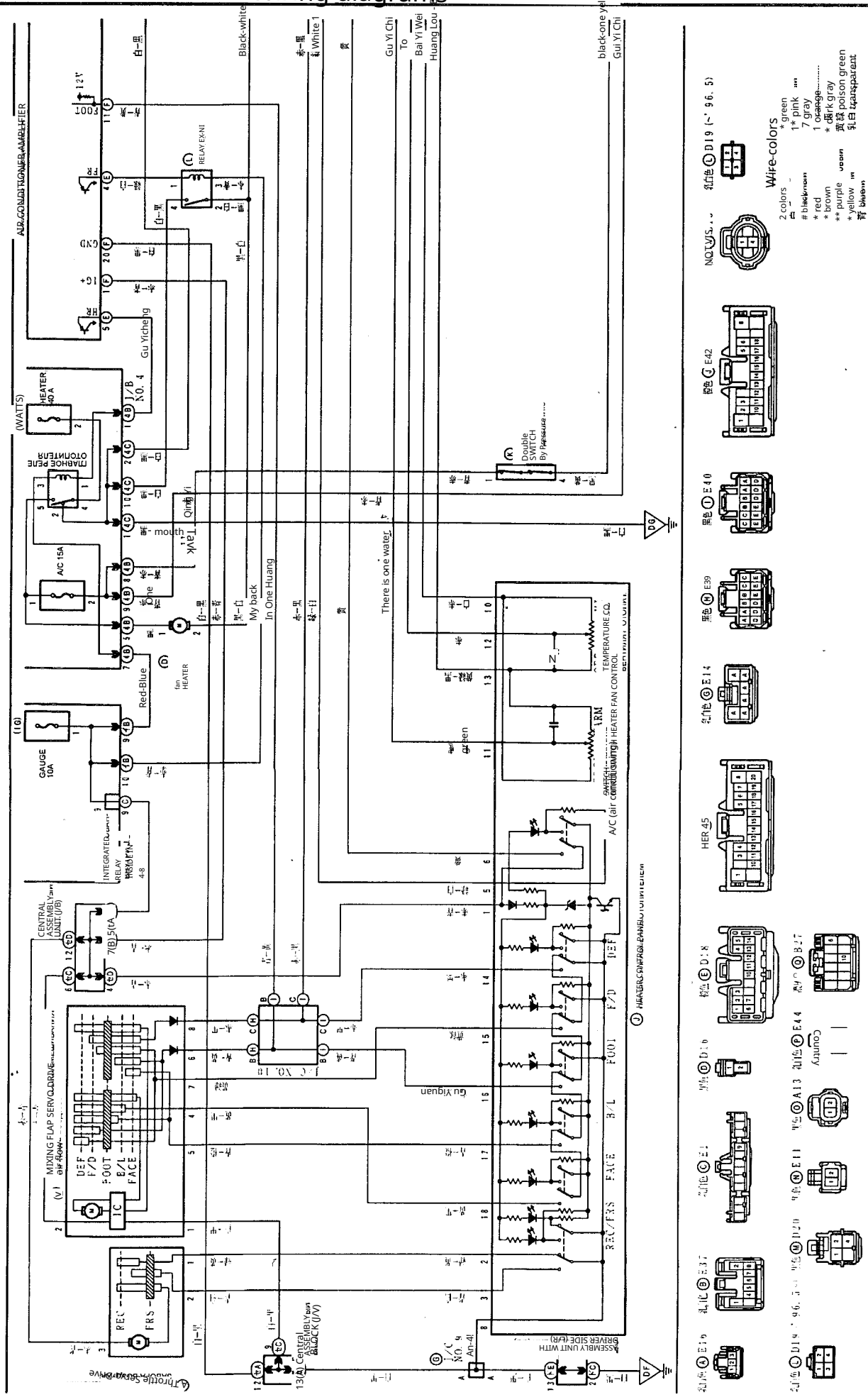

AUTOMATIC CLIMATE CONTROL AIR CONDITIONER (UP TO 97.4, BUTTON TYPE)

*1 4A - FE, 7A - FE
*2 4A - GE

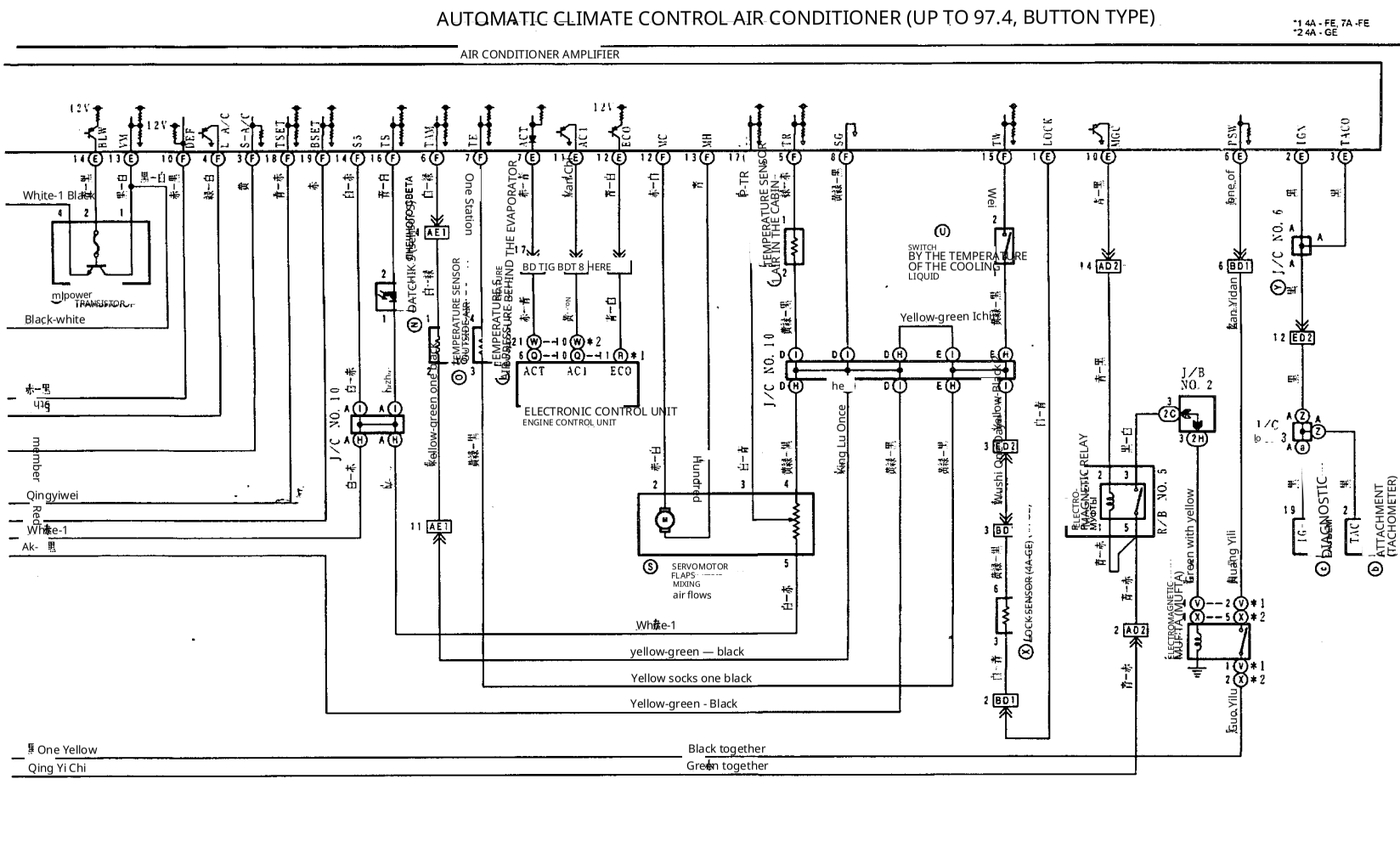

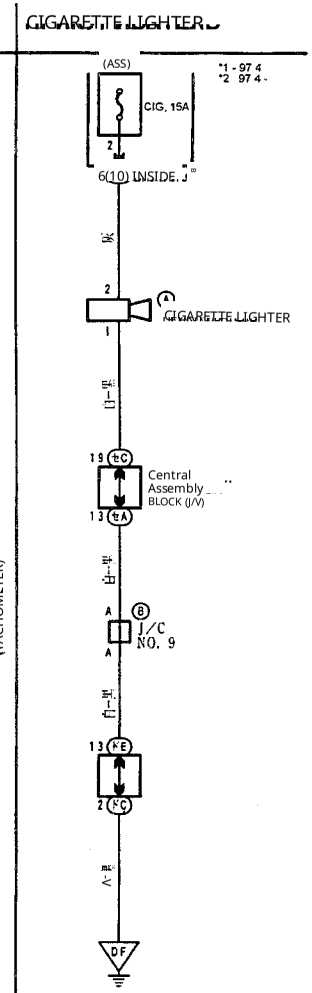

ME® B25 | 乳白色 Ⓢ E38 | NEDE36 Ane | Ⓤ E43 | 灰色 Ⓥ B42 | 灰蓝色 Ⓦ V53 | 灰色 Ⓧ B63 | 黑色 Ⓨ D11 | 黑色 Ⓩ E18 | 黑色 ⓐ V28 | 乳白色 ⓑ E6

黑色 ⓒ In 12

AL@@E17 *) Yane 8 E14 *1
乳白色 Ⓐ E77 *2 乳白色 Ⓑ ETO #2

Wire colors

2 colors	** green
To white	Not pink
# black	7 gray
* red	+ orange
* brown	• dark gray
* violet	* poisonous green
* yellow	乳白 transparent
#blue	

AIR CONDITIONER WITH AUTOMATIC CONTROL (FROM 97.4, PUSH-BUTTON)

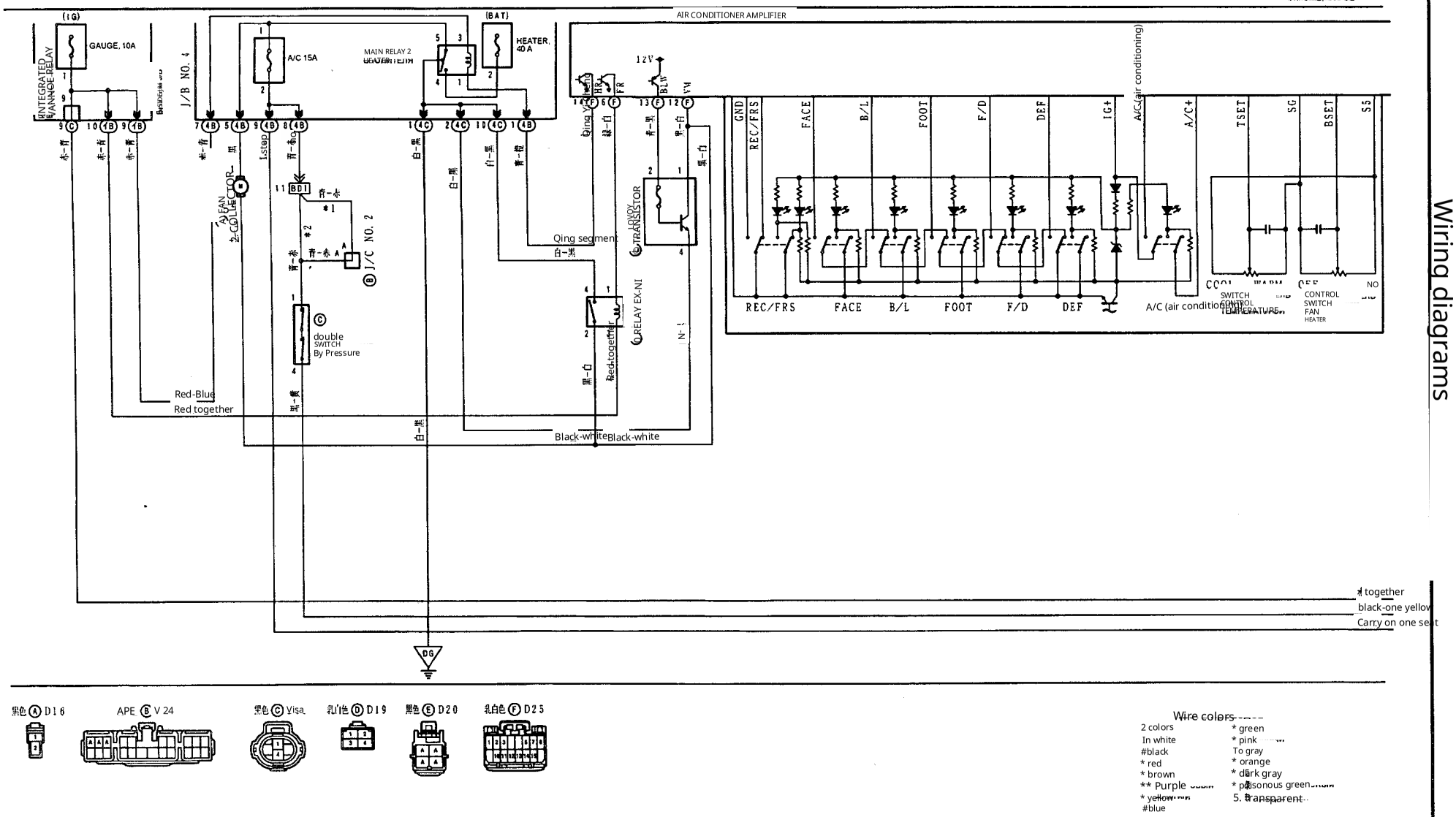

AIR CONDITIONER WITH AUTOMATIC CONTROL (FROM 97.4, PUSH-BUTTON)

*1 4A - GE
*3 7A - FE, 4A - FE
*4: '98. 4-24A-CE
*5 - 98.4

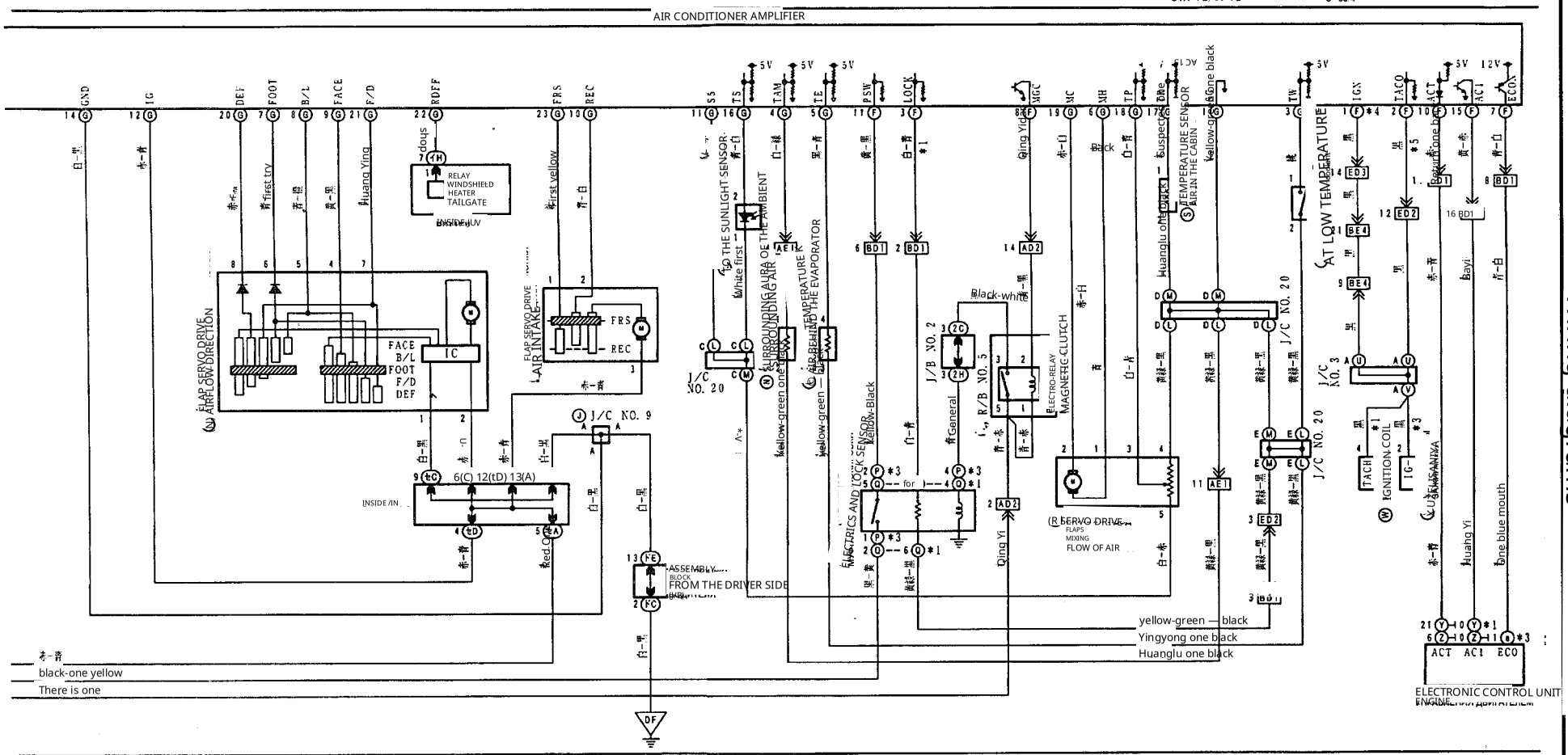

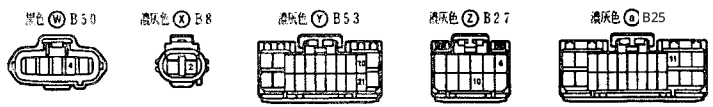

Wire colors

2 colors	* green
To white	* pink
- black	* gray
* red	# orange
* brown	濃灰 dark gray
*** purple	黄緑 poison green
黄 yellow	5. transparent
#blue	

MANUAL AIR CONDITIONER (PUSH-BUTTON)

*1 - 96.5 *3 4A - FE, 7A - FE *5 - 97.4 *7 - 96.5, 97.4 - *9 - 98.4
*2 96.5 - *4 4A - GE *6 97.4 - *8 96.5 - 97.4 *10 98.4 -

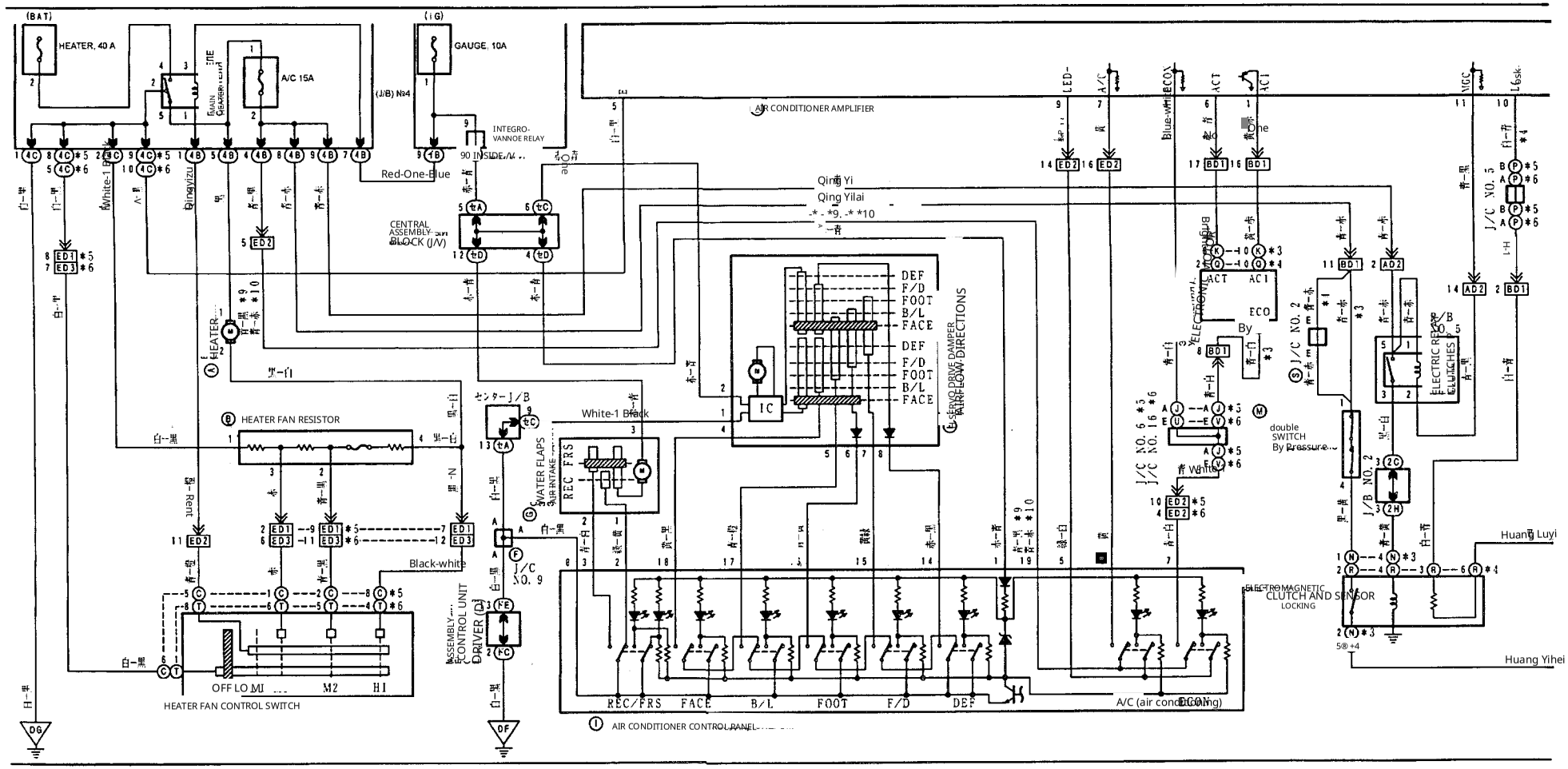

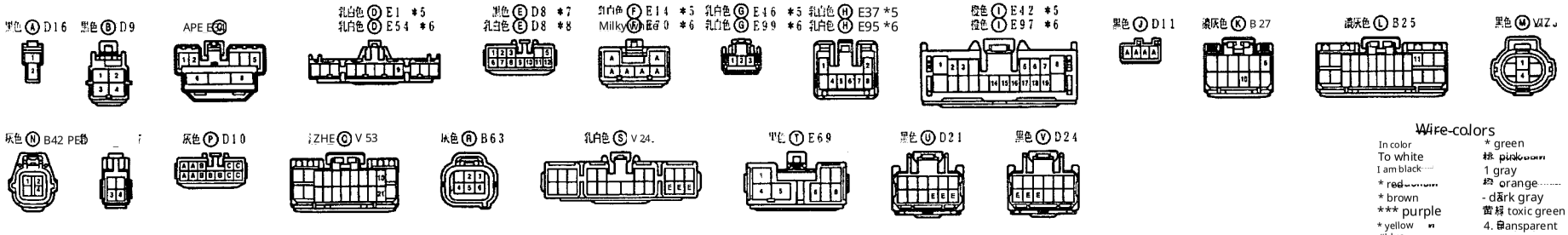

Wire-colors

In color
To white
I am black
* red
* brown
*** purple
* yellow
#blue

* green
1 gray
orange
- dark gray
toxic green
4. transparent

MANUAL AIR CONDITIONER (BUTTON-TYPE)

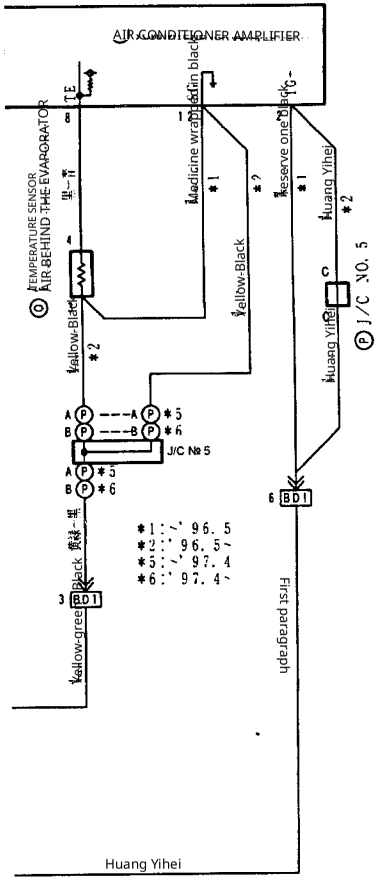

ADDITIONAL INDICATORS BLOCK

*1 - 965
*2 965 -

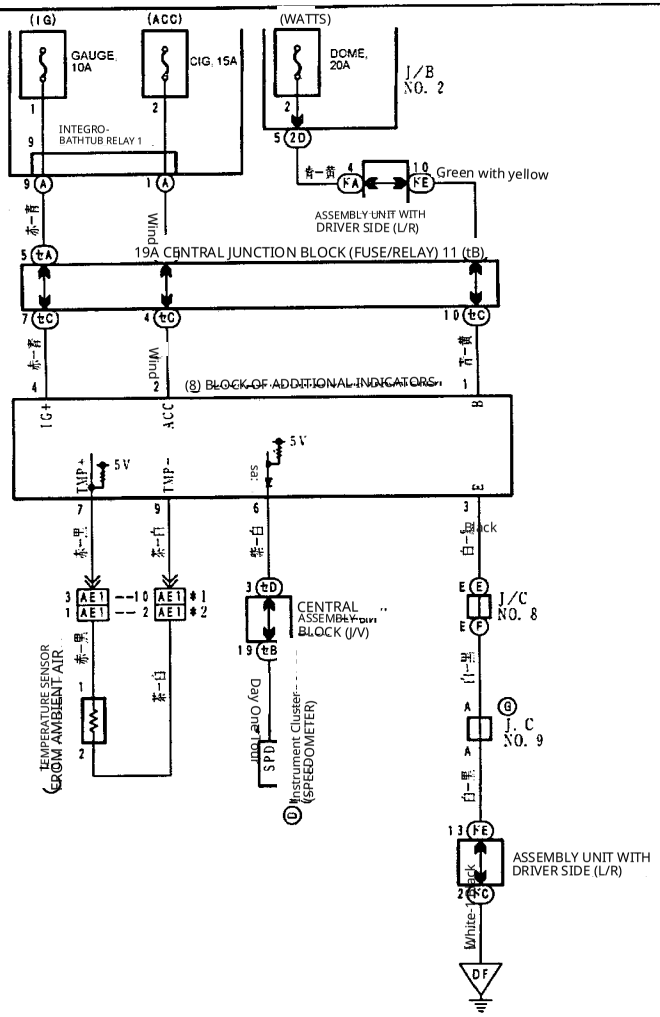

Wire colors

2 colors	** green
To white	* pink
#black	* gray
* red	Into orange
* brown	* dark gray
** purple	** poisonous green
* yellow	乳白 transparent
#blue	

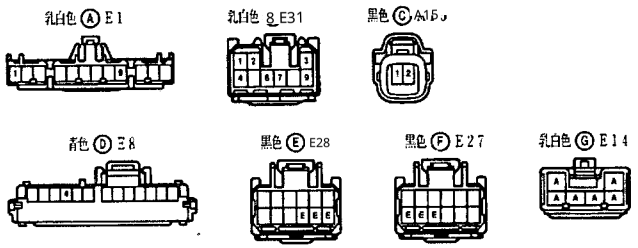

Contents

Abbreviations and symbols.... 3

Identification 3

General repair instructions.. 3

Garage jack mounting points and the lift arms 4

Owner's Manual 5

Instruments and gauges ..... 5. Checking the working fluid level
Door lock 6
Power window regulator.. 7
Vehicle lighting indicators 7
Hood and tailgate 8
Fuel filler flap 8
Seat position adjustment.. 8
Steering wheel position adjustment 9
Mirror control. 9
Wiper and washer switch. 9
Wiper de-icer switch.. 10
Sunroof. 10
Heater controls 10
Head unit (radio).... 11
Volume control. 11
Adjustment of balance.. 11
Equalizer... 11
Radio. 11
"Favorite station" 11
Car stereo..... 12
Clock 12
Additional information display.... 12
Anti-lock Braking System (ABS) 12
Driving a vehicle with an automatic transmission. 13
Transmission features of 4WD models 14
Driving tips in various conditions 14
Towing the vehicle. 14
Engine starting. 15
Engine malfunctions while driving. 16
Wheel replacement. 16
Recommendations for selecting tires 16
Checking tire pressure and condition 17
Tire replacement 17
Features of operating aluminum rims. 17
Replacement of wheel rims.... 17
Brake pad wear indicators 17
Catalytic converter and exhaust system 17
Checking and replacing fuses and fusible links 18

Maintenance and general inspection and adjustment procedures 20

Maintenance intervals 20
Engine oil and filter. 20
Precautions when working with oils. 20
Choosing engine oil. 20
Checking engine oil level 21
Engine oil and filter replacement. 21
Inspection and replacement of coolant.. 21
Inspection and cleaning of the air filter 21
Checking the condition of the battery. 22
Inspection of accessory drive belts. 22
Inspection of timing belt components. 23
Inspection of high-voltage wires. 23
Inspection of spark plugs 23
Inspection and adjustment of ignition timing advance. 24
Idle Speed Check 24
Compression stroke end pressure check..... 24
Checking the level of operating fluid hydraulic actuators of the clutch and braking system.. 25
Inspection and replacement of oil in the manual transmission (MT) and transfer case 25
Checking the operating fluid in the automatic transmission (AT). 25
Replacing the filter in the automatic transmission (AT).: 25
Replacing the operating fluid in the automatic transmission (AT). 26
Checking the transfer case oil (automatic transmission) 26
Replacing the transfer case oil (automatic transmission) 26
Checking the rear axle gear oil level..... 26
power steering amplifier..... 26
Replacing the working fluid power steering amplifier.. 26

Engines 4A-FE and 7A-FE..... 27

Checking and adjusting valve clearances.... 27
Timing belt.....29 .....
Cylinder head 31
Engine block. 36

Engine 4A-GE..... 38

Checking and Adjusting Valve Clearances.... 38
Timing belt. 39
Cylinder head 41
Engine block. 42

Engine general procedures repair 44

Cylinder head 44
Disassembly of the cylinder head. 44
Inspection, cleaning and repair of parts cylinder head 44
Cylinder head assembly 47
Engine block 50
Disassembly of the cylinder block. 50
Inspection of the cylinder block 52
Disassembly of the piston-connecting rod assembly. 53
Inspection of the piston and connecting rod 53
Cylinder boring. 55
Inspection and repair of the crankshaft... 55
Replacement of crankshaft oil seals. 56
Assembly of the piston-connecting rod assembly. 57
Assembly of the engine block 57

Cooling system 59

Coolant pump. 59
Thermostat. 59
Radiator cleaning 60
Radiator inspection. 60
Cooling system electric fan 60
Checking sensors and relays 60

Lubrication system..... 61

Checking oil pressure 61
Oil pump and oil pan (4A-FE, 7A-FE). 61
Oil pump and oil pan (4A-GE)... 64
Inspection of the oil pump 65

Fuel injection system 66

Description. 66
Precautionary measures. 66
Precautions when servicing electrical equip ment 66
Precautions when the vehicle is equipped with a mobile radio communication system. 66
Precautions for working with the system air supply. 66

Precautions when working with the electronic control system 67
Precautions when working with the fuel system 67
Diagnostic system. 68
Description. 68
Malfunction indicator lamp ("CHECK" engine light). 68
Retrieving diagnostic codes 68
Diagnostic display.... 69
Clearing a diagnostic code 69
Diagnostic System Circuit Check 69
Diagnostic codes for the electronic control unit.. 70
Outputs of the electronic control unit. 72
Engines 4A-FE and 7A-FE.. 73
Engines 4A-FE and 7A-FE (continued). 73
Engine 4A-GE 73
Engine 4A-GE (continued)... 74
Inspection of injection system components using an oscilloscope..... 75
Some technical data of the system electronic control... 76
Fuel system 77
Fuel pump 77
Fuel pressure regulator 78
Fuel filter 78
Fuel tank. 79
Injectors 80
Air intake system 83
Throttle body (4A-FE, 7A-FE). 83
Throttle bodies (4A-GE). 84
Speed Control System Valve idle speed. 86
The electronic control system.. 88
Main relay of the fuel injection system 88
Fuel Pump Relay Switch 88
Coolant Temperature Sensor and Intake Air Temperature Sensor 89
Intake Absolute Pressure Sensor in the intake manifold 89
Detonation sensor 89
Checking the VVT system valve (4A-GE).. 89
Oxygen sensor..... 89
Troubleshooting algorithm oxygen sensor..... 90

Ignition System 91
Precautions 91
Inspection of ignition system components.. 91
Combined ignition unit. 92
Distributor 93

Starting System 95
Starter. 95
Disassembly and assembly of starter (with conventional reduction gear) 95
Disassembly and assembly of starter (with planetary reduction gear) 96
Replacement of traction relay terminals 97
Inspection of starter.. 98
Starter operation check. 101
Starter relay 101

Charging system 102
Precautionary Measures 102
Vehicle Inspections 102
Alternator disassembly 102
Alternator inspection 103
Alternator assembly. 104

Clutch... 105
Checking and adjusting the clutch pedal travel. 105
Clutch release master cylinder..... 105
Clutch release slave cylinder..... 106
Clutch.... 106

Manual transmission.. 108
4WD transmission operation diagram. 108
Checking and changing the oil in the manual transmission and transfer case. 108
Removal and installation of the transmission assembly. 108
Center differential lock system 115
System inspection.... 115
Checking the lock buzzer operation Center differential. 115
Inspection of components 116
Inspection of solenoid valves. 116
Inspection of the vacuum actuator 116
Shift lever 116
Replacement of front drive shaft oil seals 117
Replacement of the output shaft oil seal transfer case 118
Transmission for 4WD models 118
Transfer case.... 118

Automatic transmission. 120
General description.... 120
Torque converter. 120
Planetary gear transmission. 120
Hydraulic control system. 121
Preliminary inspections 121
Inspection and adjustment of the control cable with the throttle valve..... 121
Checking and adjusting the automatic transmission control linkage 121
Checking and adjusting the switch prohibition of engine starting... 122
Idle Speed Check (range N) 122
Automatic transmission diagnostics. 122
Self-diagnosis system 122
General information... 122
Checking the mode-off indicator overdrive 122
Reading fault codes. 122
Clearing fault codes 123
Checking gear shifting 123
Checking voltage at the "TT" terminal. 124
Checking the mechanical systems of the gearbox 124
Test of the interaxle differential lock clutch of the differential 128
Selector and ignition key locking system 130
Checking the selector lock. 130
Checking the ignition key lock 130
Solenoid Valve Inspection selector unlocking 130
Checking the solenoid valve. ignition key lock 130
Checking the stop light switch. 130
Checking the selector unlock switch..... 130
Checking the selector lock control unit.... 131
Checking electrical components control systems 131
Throttle valve control cable.. 135
Drive shaft seals 136
Transfer case output shaft oil seal.. 136
Removal and installation of the gearbox assembled (models from 1996)..... 136
Torque converter and drive plate of the torque converter... 136

Transfer case 139
General description 139
Removal 139
Installation 139
Disassembly. 139
Assembly 141

Driveshaft 144
Removal.. 144
Inspection.. 144
Disassembly 145
Assembly... 145
Installation. 145

Rear axle differential 146
Replacement of the front oil seal..... 146
Replacement of the drive shaft oil seals 147
Removal and installation of the final drive 148
Checking runout of the coupling flange 148

Drive Shafts 149
Removal of front drive shafts 149
Disassembly of front drive shafts 150
Assembly of front drive shafts 152
Installation of front drive shafts 153
Removal of rear drive shafts 153
Disassembly of rear drive shafts. 154
Assembly of rear drive shafts 154
Installation of rear drive shafts 154

Suspension..... 155
Preliminary inspections. 155
Front wheel alignment angle adjustment 155
Toe inspection and adjustment 155
Steering angle inspection.. 155
Camber and caster inspection and the transverse tilt of the steering axis 155
Front wheel camber adjustment. 156
Rear wheel alignment angle adjustment 157
Toe inspection and adjustment 157
Rear wheel camber inspection 157

Front suspension 157
Front suspension strut. 157
Lower front suspension arm 159
Lower ball joint..... 160
Anti-roll bar (stabilizer bar) 161
Front axle hub 161

Rear suspension (4WD models)..... 164
Rear suspension strut 164
Rear suspension arms... 164
Anti-roll bar (stabilizer bar) 165
Rear axle hub 165

Rear suspension (2WD models)..... 168

Steering... 170
Checking steering wheel play 170
Checking the power steering pump drive belt. 170
Checking the level of operating fluid 170
Checking the steering wheel effort. 170
Checking the working fluid pressure power steering booster. 170
Power steering system bleeding 171
Steering gear 171
Power steering pump steering (4A-FE, 7A-FE)..... 173
Power steering pump (4A-GE). 173
Steering column..... 174

Brake system 176
Bleeding the brake system.. 176
Inspection and adjustment of the brake pedal 176
Inspection and adjustment of the parking brake. 176
Master brake cylinder 177
Brake vacuum booster 178
Operational check of the vacuum booster 178
Checking the non-return valve... 179
Removal of the power brake booster 179
Adjusting the length of the power brake booster rod 179
Installation of the power brake booster 179
Front brakes 179
Rear brakes 180
Inspection and replacement of rear disc brakes (models from 1996) 181
Parking brake. 182
Pressure regulator (P - valve). 183
Anti-lock Braking System (ABS). 184
Description of the diagnostic system. 184
Checking the ABS system. 184
Resetting fault codes. 185
Diagnosis of speed sensors and deceleration.... 187
Pressure modulator. 189
Brake light switch inspection 189
Control relay.. 190
Front wheel speed sensors. 190
Rear wheel speed sensors.. 191
ABS circuit check 192

Body..... 195
Retainers (push pins). 195
Front bumper 196
Hood adjustment 196
Rear bumper..... 196
Rear hatch door adjustment 197
Side doors 197
Trunk.... 200
Rear spoiler 200
Rear door.... 200
Windshield.... 201
Rear fixed side glass 202
Rear hatch glass 203
Hatch..... 204
Instrument panel (type 1). 205
Instrument panel (type 2) 207
Interior trim of the passenger compartment.. 209

Air conditioner, heating and ventilation..... 210
Safety measures when working with refrigerant.. 210
Evacuation and charging of the system 210
Installation of the gauge cluster 210
Vacuuming the system 210
Installation of the charging cylinder. 210
Leakage inspection of the system 210
Refilling the refrigerant.. 211
Removing the pressure gauge assembly 211
Checking the amount of refrigerant 211
Cooling lines.. 211
Vehicle inspection. 211
Replacement of pipeline components 211
Air conditioning control panel 212
Removal of the control panel with air conditioner (type No. 1). 213
Installation of the air conditioning control panel 213
Front heater unit and air conditioning systems.. 213

Evaporator 214
Heater 215
Compressor.. 215
Heater fan 216
Actuators. 216
Checking sensors, relays, and switches 217
Checking the cabin temperature sensor.. 217
Checking the temperature sensor ambient air. 217
Checking the evaporator outlet temperature sensor 217
Checking the temperature sensor engine coolant temperature in the heater radiator 217
Checking the temperature switch of the coolant. 217
Checking the pressure switch.. 217
Checking the electro-pneumatic valve... 217
Checking the fan relay No. 2... 217
Checking the fan relay No. 3. 217
Check of relay EX-NI (automatic air conditioner). 218
Inspection of fan speed switch heater fan (lever-type panel). 218
Inspection of the control panel switch for the air conditioner "A/C - ECON" (lever-type panel). 218
Checking the blower motor speed switch (press-button type panel) Checking the blower motor speed switch (automatic air conditioner). 218
Checking the air flow direction switch (push-button type panel).. 218
Checking the air intake switch (push-button type panel).. 218
Checking the control panel switch air conditioning "A/C - ECON" (push-button type panel).. 218
Checking the temperature regulator 218
Checking the heater main relay.. 218
Checking the electric motor operation heater fan 218
Checking the electric motor operation condenser fan 219
Solenoid Valve Inspection 219
Checking the fan resistor (push-button type panel). 219
Checking the power transistor (automatic air conditioner). 219
Checking the air conditioner amplifier (push-button type panel). 219
Checking the air conditioner amplifier (automatic air conditioner). 220
Check of the built-in illumination switch (button-type panel)... 221
Check of the control panel operation with air conditioning (button-type panel) 221
Check of the control panel operation with air conditioning (automatic air conditioner). 222
Inspection of the electronic control unit operation with air conditioning (automatic air conditioner). 223

SRS (Supplemental Restraint System) 225
Safety measures.... 225
Airbag (models up to 1996). 225
Removing the steering wheel cover.. 225
Inspecting the steering wheel cover. 225
Steering wheel inspection 225
Installing the steering wheel cover... 225
Airbags (models from 1996) 225
System diagnostics..... 226
Removal and installation of the airbag passenger 226
Removal and installation of the airbag driver 227
Airbag sensor.... 227
Safety system (models from 1997). 227
Safety system (models from 1998). 228
System diagnostics 228
Front safety system sensors 228
Central safety system sensor 229

Body electrical equipment..... 230
General information 230
Precautions 230
Replacing fuses. 230
Location of fuse boxes and relay blocks. 230
Connector identification 237
Ignition switch 237
Headlights. 237
Fog lights 238
Inspection of system components lighting control. 238
Headlight relay inspection. 238
Checking the rear position lights relay. 238
Checking the fog lights relay. 238
Checking the combination switch 238
Checking the flasher relay turn signal indicators..... 238
Checking the hazard warning switch..... 238
Checking the starter inhibit switch and the automatic transmission gear selector position sensor. 239
Checking the light switch reverse gear (manual transmission)... 239
Checking the limit switches. 239
Checking the tailgate limit switch..... ...239
Checking the stop light switch 239
Checking the high-mounted stop lamp (on the spoiler) 239
Checking the key presence sensor in the ignition lock 239
Checking the integrated relay..... 239
Wiper control switch 239
Checking the control switch wiper 239
Checking the operation of the windshield wiper washer..... 239
Checking the motor windshield wiper motor.. 240
Checking the wiper switch rear hatch glass... 240
Checking the rear hatch glass wiper relay... 241
Checking the motor rear hatch window washer cleaner.. 241
Check of the washer switches windshield and rear hatch window 241
Check of the washer motor (windshield or rear hatch window). 241
Instrument cluster. 242
Inspection.. 242
Speedometer reading check 243
Speed sensor inspection 243
Speed sensor inspection (inside the instrument cluster) 243
Tachometer inspection.... 243
Checking the gauge sensor Engine coolant temperature.. 243
Checking the temperature sensor Engine coolant... 243
Checking the fuel level gauge 243
Checking the fuel level sensor. 243
Checking the low fuel level sensor 244

Checking the seatbelt unfastened indicator seat belts 244
Checking the unfastened seatbelt sensor seat belts 244
Checking the oil pressure warning indicator.... 244
Checking the oil pressure warning sensor 244
Checking the brake system indicator 244
Checking the engagement sensor parking brake 244
Low-level sensor check brake fluid 244
End switch check 244
Position indicator check automatic transmission selector 244
Checking the indicator and buzzer when reversing... 244
Checking the upshift indicator. 244
Checking the upshift switch. 244
Check of the automatic transmission (AT) operating mode indicator. 244
Overheat Sensor Check Automatic Transmission Fluid (4WD)... 245
Lock Switch Check Center Differential (4WD) 245
Rear window heater and wiper de-icer 245
Clock 246
Horn 246
Power windows.. 246
Central locking 247
Checking the door lock control relay. 247
Checking the central locking switch. 249
Checking the tailgate lock switch 249
Checking the central locking switch lock (in the door lock). 249
Checking the door lock actuator. 249
Remote locking. 249
Electric sunroof drive. 250
Outside mirror position adjustment system. 251

Electrical system diagrams..... 253

Abbreviations and symbols on the electrical system diagrams 253
Wire colors. 253
Ground point locations.... 253
Diagram 1. 254
Power supply
Horn
Diagram 2. 255
Starting and Ignition System
Diagram 3. 256
Engine Management System (4A-FE, 7A-FE)
Diagram 4. 257
Engine Management System 4A-FE, 7A-FE (continued)
Cooling system electric fan
Diagram 5. 258
Engine Management System (4A-GE)
Diagram 6. 259
Engine Management System 4A-FE (continued)
Charging system
Shift lock
Diagram 7. 260
Anti-lock Braking System (ABS)
Schematic 8. 261
Anti-lock Braking System (continued)
4WD Control (from 97.4 with automatic transmission)
Schematic 9. 262
Automatic Transmission Indicators and Electronic Control System
Diagram 10..... 263
4WD control (up to 97.4 with automatic transmission)
Airbags (from 97.4)
Diagram 11..... 264
4WD Control (up to 97.4 with manual transmission)
Airbags (96.5 - 97.4)
Overdrive (except models with with electronic control)
Diagram 12.. 265
Central locking
Diagram 13..... 266
Electric mirror drive
Power window drive
Schematic 14..... 267
Power window drive (continued)
Sunroof actuator
Schematic 15.. 268
Instrument cluster
Diagram 16... 269
Instrument Cluster (continued)
Diagram 17. 270
Seat Belt Reminder System for Unfastened Seat Belts
Wiper de-icer
Rear window heater (until 97.4)
Diagram 18..... 271
Clock
Windshield wiper and washer
Tailgate window wiper and washer
Schematic 19... 272
Car audio system (up to 97.4 with amplifier)
Car audio system (from 97.4 with built-in amplifier) and navig ation system (from 97.4 with built-in amplifier) Schema tic 20... 273
Headlights
Fog lights
System for warning of a key left in the ignition and lights left on
Grounding
Diagram 21. 274
Turn Signals and Hazard Warning Lights
Interior lighting
Diagram 22. 275
Stop lights
Parking/position lights
Reverse light
Diagram 23. 276
Illumination
Rear Door Glass Heater (from 97.4)
Diagram 24. 277
Manual Air Conditioning (lever type)
Diagram 25. 278
Automatic Climate Control (up to 97.4 push-button)
Diagram 26... 279
Automatic Climate Control (up to 97.4 push-button (continued))
Diagram 27.... 280
Automatic climate control (from 97.4 push-button)
Diagram 28.. 281
Automatic climate control (from 97.4 push-button (continued))
Schematic 29... 282
Manual-Control Air Conditioner (push-button)
Schematic 30. 283
Manual-Control Air Conditioner (push-button) (continued)
Auxiliary Indicators Unit

Interchangeability of Certain Parts

Note: please be aware that some parts may not fit certain models or equipment variations.

Sprinter Carib AE111G, AE114G, AE115G

ENGINE 4A-FE, 4A-GE, 7A-FE					
Filters		qty.	VIC	Micro	FRAM
Oil	4A-FE, 7A-FE	1	C-110	T1636	PH4967
	4A-GE	1	C-113	T1639	PH4386
Air	4A-FE, 7A-FE, 4A-GE	1	A-177	WA1383	CA5466
Fuel	4A-FE, 7A-FE	1	FC-183	FT1156	G7612
	4A-GE		23300-19515	FT1132	-
Spark plugs, high-voltage wires		qty.	Toyota	NGK	Denso
Spark plugs	4A-FE, 7A-FE	4	90919-01164	BKR5EYA-11	K16R-U11
	4A-GE	4	90919-01179	BKR6EP-11	PK20R11
High-voltage wires | 4A-FE, 7A-FE (set)		1	90019-22327	RC-TE41	-
	4A-GE	1	90919-21592	RC-TE55	-
Drive belts		qty.	盖茨	康迪泰克 (ContiTech)	三ツ星 (Mitsuboshi)
TIMING DRIVE (timing mechanism)	4A-FE	1	5403XS	CT827	117MY21
	4A-GE	1	13568-19185	-	110RU21
	7A-FE	1	5386XS	CT850	121MY21
Alternator, pump coolant	4A-FE, 7A-FE	1	58363	5PK970	5PK970
	4A-GE	1	58352	-	5PK840
power steering pump steering system	4A-FE, 7A-FE	1	38335	3PK630	3PK630
	4A-GE	1	58370	5PK1060	5PK1060
Air conditioning compressors | 4A-FE, 7A-FE		1	48353	4PK850	4PK850
Belt drive pulleys		qty.	Toyota	Autowelt	SKF
Tensioner pulley timing drive	4A-FE, 7A-FE	1	13505-15050	TR34025	VKM 71007
	4A-GE	1	13505-16020	TR34003	-
Drive shaft oil seals		qty.	Toyota	Payen	Musashi
rear crankshaft	70x92x8.5	1	90311-70004/07	NJ001	T1172
camshaft	35x49x6	2	90311-35013/22	NJ353	T1173
Oil pump	32.5×46×6	1	90311-32018/20	NJ349	T1262
Valve stem oil seals (valve stem seals) intake/exhaust		16	90913-02090/ 90913-02089	PA425	MV128/MV122

Coolant pump		qty.	Toyota	GMB	Autowelt	Paraut
Pump assembly	4A-FE	1	16110-19135/45	GWT-83A	WP34002	-
	4A-GE	1	16110-19195	-	-	T3-097
	7A-FE	1	16100-19265/305	GWT86A	WP34019	-

Thermostat		qty.	Toyota	Wahler	Tama
	4A-FE, 7A-FE	1	90916-03046	4103-82	WV48B-82
	4A-GE	1	90916-03075	-	WV56TB-82

Sensors		qty.	Toyota	Cargo	FAE
Oil Pressure	7A-FE	1	83530-30090 83530-60020	7.0114	1255
Automatic Transmission Fluid Overheat Sensor	7A-FE	1	83420-20040	7.3184	-
Engine Coolant Temperature Sensor	7A-FE	1	89428-12160	7.5095	3616

Gaskets		qty.	Toyota	Payen	Stone	Autowelt
Cylinder Head | 4A-FE		1	11115-16150	BX100	JA-11176	HG34010
	4A-GE		11115-16111	-	JA-11182	
	7A-FE	1	11115-16121	BV360	JA-11173	HG34320
Gasket set	4A-FE	1	04111-16231	-	JFS-10344	FS34010
	4A-GE		04111-16330	-	JFS-10342	
	7A-FE	1	04111-16320	-	-	FS34320

Cylinder-piston group	qty.	Toyota	AE	Autowelt
Piston nominal	4A-FE 4 13101-16160-01		-	PN34210
Rings nominal (set)	4A-FE 1 13011-16340		-	RS34250
Piston nominal	7A-FE 4 13101-16190-01		-	PN34310
Rings nominal (set)	7A-FE 1 13011-16300		-	RS34170

Bearings		qty.	Toyota	AE	Autowelt
Main bearings nominal (set)	4A-FE, 7A-FE	1	11704-16010	AEM5464	MS34010
Connecting rod bearings nominal (set)	4A-FE	1	13204-15030	AEB4676	BE34010
Connecting rod bearings nominal (set)	7A-FE	1	13204-16090	-	BE34250

TRANSMISSION

Clutch	qty.	Toyota	SKF	Valeo
Clutch housing assembly	1	31210-12131	-	-
Driven disc	1	31250-17030	-	TY27
Release bearing	1	31230-20170	VKC 3584	-
Repair kit for master cylinder of the clutch actuation clutch release	1	04311-12080	-	-
Repair kit for slave cylinder of the clutch actuation clutch release	1	04313-22030	-	-

Drive shaft oil seals		qty.	Toyota	Payen	Musashi
Gearbox front	AT	1	90311-38020	NK049	T1256
	MT	1	90311-25016	NJ617	T1174
Front left drive shaft | AT		1	90311-44004	-	-
Front right drive shaft | AT		1	90310-50002 90311-50025	-	-
Speedometer gear shaft		1	90310-09001	-	-
| Transfer Case Tailshaft	AT/MT	1	90311-38030/32	NK168	T1204
Input shaft of the rear axle reducer rear axle	AT/MT	1	90311-38019/68	-	-
Output shaft of the rear axle reducer rear axle	AT/MT	2	90311-35032	-	-

CV Joint (ШРУС)	qty.	HDK	GLO	
| Front CV Joint	2	TO09	3050	
| CV Joint with ABS	2	TO25	-	

Front CV Joint Boots	qty.	5-825	Maruichi	Seikin
Outer CV joint dust boot	2	FB-2119	25-413	SB88
| Inner CV joint dust boot	2	FB-2120	27-414	SB94

WHEELS AND HUBS

	qty.	Toyota	Koyo	Payen
Front Wheel Bearing	2	90363-38006	DAC3872W-8CS81	-
Front Hub Seal Kit	2	04422-12091/100	-	-
Rear wheel bearing	2	90369-38018	46T080604-1LFTCS76	-
Rear hub inner oil seal	2	90311-56007	TO1265	NK054
Rear hub outer oil seal	2	90311-52010	-	-

SUSPENSION

Shock absorbers		qty.	Toyota	KYB	
Front Left	Strut	1	48520-19175	334187	
Front Right	Strut	1	48510-19455	334186	
Rear Left	Strut	1	48530-19705	333286	
Rear right	Strut	1	48540-19155	333287	
Bushings and Stabilizer Links		qty.	Toyota		
Front Stabilizer Bushings		2	48815-12240		
Rear Stabilizer Bushings		2	48818-12220		
Rear Stabilizer Link		2	48830-12050		
Ball joint		qty.	Toyota	555	CTR
		2	43330-19115	SB3642	SVT46

STEERING

Steering tie rod boots	qty.	Toyota	5-825	Maruichi
	2	45535-12060	RP-2065	27-493
Drive shaft oil seals	qty.	Toyota	Payen	Musashi
Power steering pump shaft management		90311-18015	-	-
Shaft of the steering mechanism		90311-19010	-	-
Steering rack		90311-24008	-	-
End joints and tie rods	qty.	Toyota	555	CTR
Steering tie rod	2	45503-19215	SR2961	CRT28
Steering tie rod end	2	45046-29305	SE2651	SET59

BRAKES

Brake pads		qty.	Akebono	Nisshinbo	Lucas
Front	set	1	AN113	PF-1077C	GDB323
Rear	set	1	NR1030	T269	GS8181
Hoses		qty.			
Front		2	90947-02802/803 Toyota		
Rear		2	90947-02809		
Repair kits		qty.	Toyota	Seikin	
Master brake cylinder		1	04493-16030 04493-12180	SK43931	
Front wheel cylinder		2	04479-12140	C-113P	
Rear wheel cylinder		2	04906-10021	SK41581R3	

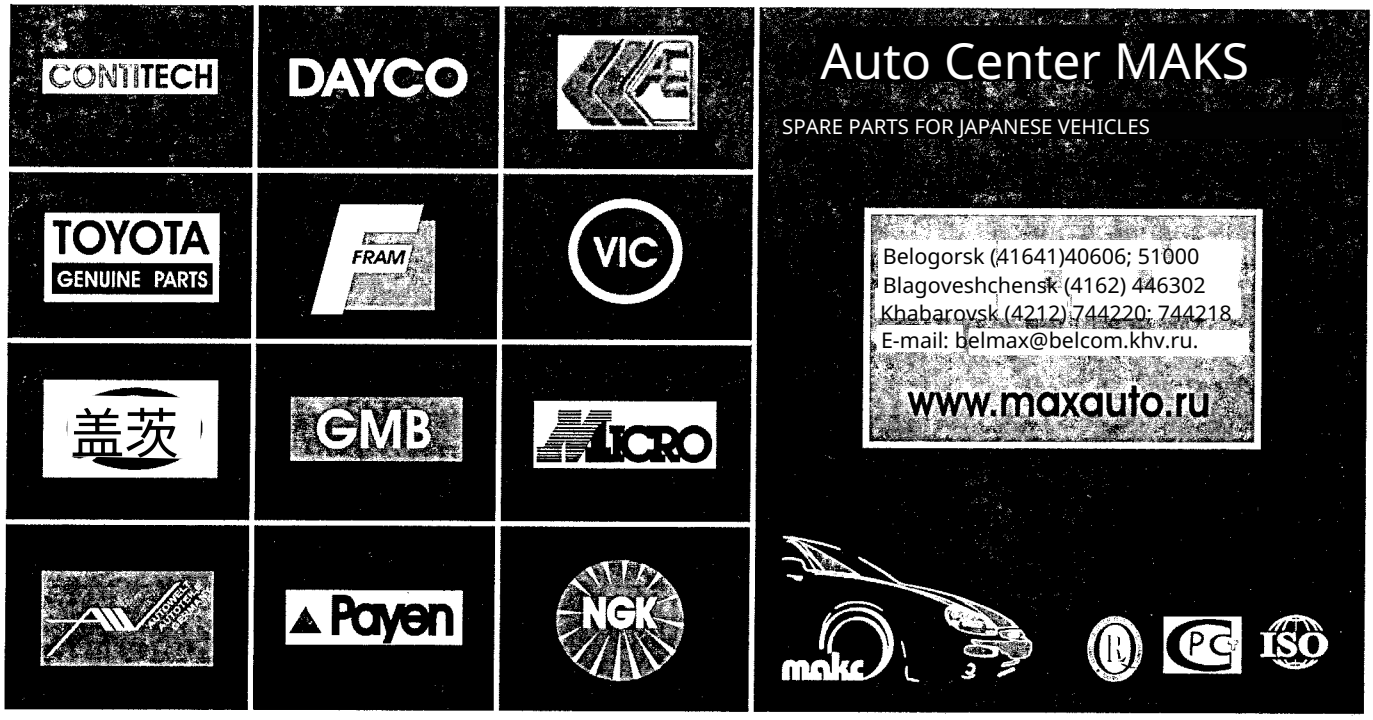

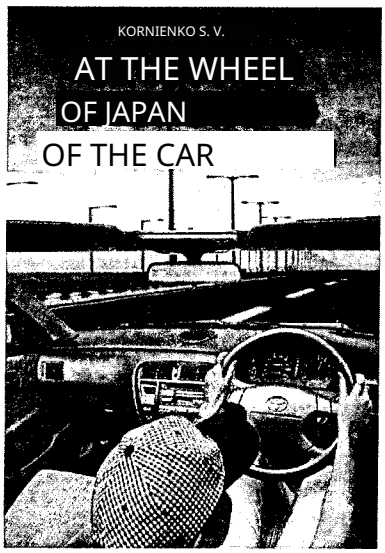

KORNIENKO S.V. At the wheel of a Japanese car. - M.: Legion-Autodata, 2002. - 176 p.: ill.

This book is not about repairs but about the operation of Japanese cars. It presents, in an accessible form, the many years of experience of owners of Japanese cars in the city of Vladivostok. When dealing with Japanese vehicles, the book can be useful not only to novice users but also to experienced car enthusiasts throughout Russia.

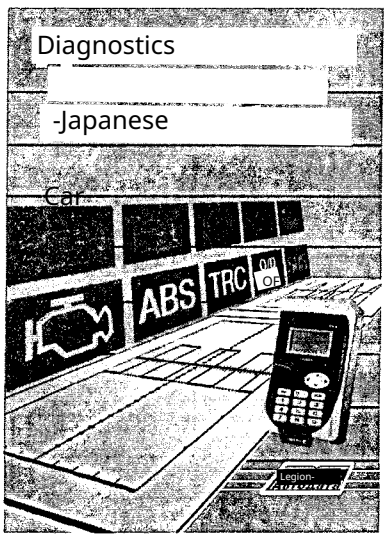

Kucher V. P. Diagnostics of Japanese Cars. - M.: Legion-Avtodata, 2002. - 176 p.: ill.

In this book the practitioner-author describes the specifics of diagnosing Japanese cars. The following topics are covered: diagnosis of the fuel injection system of gasoline engines and the electronic control system of diesel engines, diesel emissions reduction systems, the anti-lock braking and traction control systems. Diagnostic codes are provided, possible causes of faults and methods for their elimination. The system for facilitating diesel engine starting and the problem of increased fuel consumption are also examined.

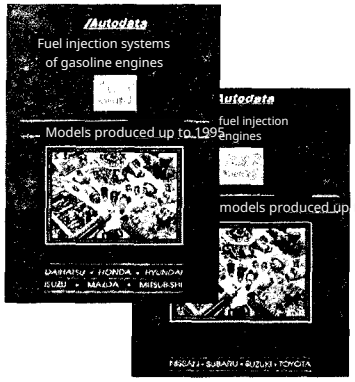

Fuel injection systems for gasoline engines (Volumes 1 - 4)

These editions are diagnostic and repair manuals for the fuel injection systems of gasoline engine models produced up to 1995:
Volume 1 in two parts (Audi, BMW, Ford, Mercedes-Benz, Opel, Volkswagen) 936 pages
Volume 2 in two parts (Daihatsu, Honda, Hyundai, Isuzu, Mazda, Mitsubishi, Nissan, Subaru, Suzuki, Toyota) (656 pages)
VOLUME 3 (Alfa Romeo, Citroën, Fiat, Jaguar, Lancia, Land Rover, Rover) 656 pages
Volume 4 (Peugeot, Renault, Saab, Seat, Škoda, Volvo) 600 pages

Description of fuel injection system components. Location of the fuel injection system co mponents on the vehicle. Adjustments of idle speed and CO emission level. Inspections o f the injection system sensors, actuators, injectors, and fuel pump. Configuration of the e lectronic control unit connector(s). Wiring diagrams of the fuel injection system. Reading of self-diagnostic codes and their interpretation. Fault-finding algorithms.

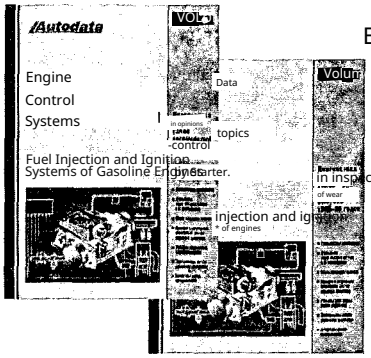

Engine management systems

Engine management systems (Vol. 6, Vol. 7, and Vol. 8) - diagnostic and repair manuals for the engine management systems of gasoline engines in European and Asian cars (Vol. 6: 1992–1996 models, Vol. 7: 1995–1998 models, and Vol. 8: 1997–1999 models).
Component locations of the management system are

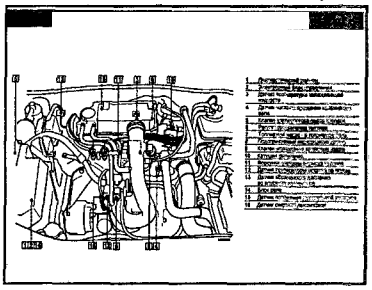

Description of engine management system components. L ocations of engine management system components. Idle speed adjustments and CO emission level adjustments. Ch ecks of sensors, actuators, injectors, and the fuel pump. C onnector configurations of engine control units. Wiring di agrams of the engine management system. Reading self-d iagnostic codes and their interpretation. Fault-finding algo rithms.

Fuel injection systems of diesel engines

These publications are manuals on the fuel injection systems of diesel engines for European and Asian cars.
Volume 2 (models 1988–1991) 464 pages Volume 3 (models 1 990–1993) 507 pages Volume 4 (models 1994–1997) 672 pa models 1996–2000) 640 pages The main functions and operatio n of all components of the fuel injection systems are describe d: Special tools and equipment. Location of injection system components. Idle speed adjustment. Injec tion timing adjustment. Removal of air from the fuel system. Injector testing. Timing belt replacement*. Cylinder head gasket replacement*. Bolt and nut tightening torques with indication of their locations*. ors and relays of the electronic diesel engine management system (Volumes 3, 4, and 5). Reading diagno d their interpretation (Volumes 3, 4, and 5). Wiring diagrams. Connector of the electronic control unit. Tes ting the control system via the electronic control unit connector (Volume 5 only).

Note: * only for volumes 2 to 4.
You can purchase Volume 3 and Volume 4 in Russian.

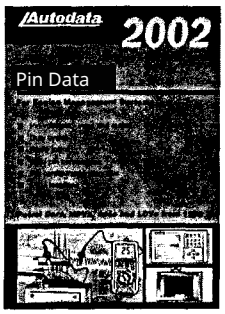

Pin Data - Control Unit Signal Checking

(Diagnostic manual for control systems of gasoline engines of European an d Asian cars from 1992–2002 via the electronic control unit connector) (864 pages)

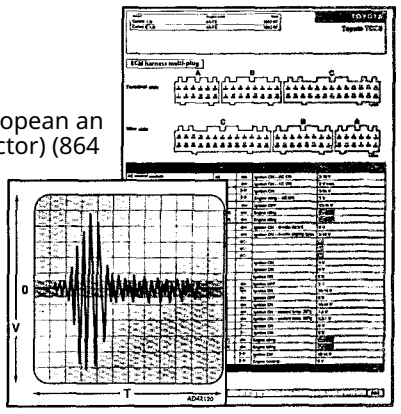

Data on the shape and amplitude of control unit signals under various engine operating modes. Typical signal waveforms w hen checked with an oscilloscope.
Location of the electronic control unit on the vehicle. Connector co nfiguration and pin numbering from the control unit side and fro m the wiring harness side. Dynamic testing: signal values at the el ectronic control unit pins under different engine conditions. Electri cal circuit checks that allow simultaneous testing of the control uni t, wiring, connectors, and system components.

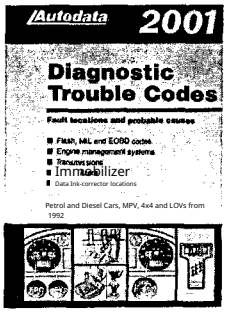

Diagnostic fault codes for petrol and diesel engine vehicles produced 1992–2001 (in English, 640 pages)

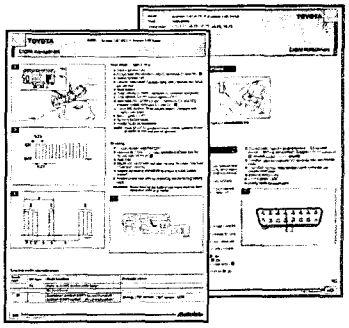

Reading fault codes using the warning lamp or a tester, including according to the OBD2 standard. Erasing fault codes from the elect ronic control unit memory. Diagnostics of the engine management system, transmission, and immobilizer. Location of diagnostic con nectors. Typical signal waveforms when checked with an oscillosco pe.

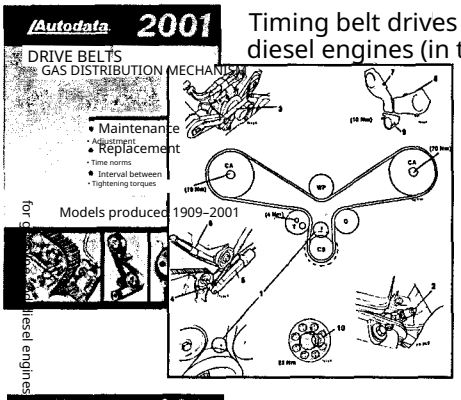

Timing belt drives for gasoline and diesel engines (in two volumes, 1,158 pages)

This manual contains comprehensive information on the inspection, replacement, and tension adjustment of timing belts for more than 500 models of gasoline and diesel engines from European and Asian vehicles manufactured between 1989 and 2001.

Removal and installation procedures. Setting the valve timing and tensioning th e timing belt drive. Diagrams of belt routing with additional illustrations of the positions of timing marks and tensioner adjusters. Manufacturer data on belt r eplacement intervals and standard labor times for operations. Torque values fo r bolts and nuts with indication of their locations.

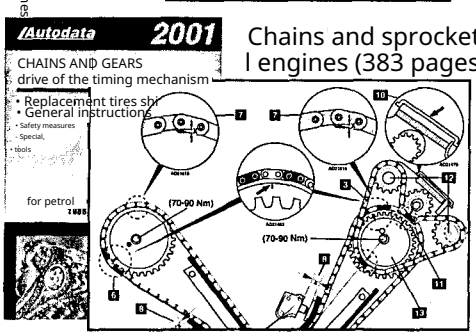

Chains and sprockets of the timing mechanism drive for gasoline and diese l engines (383 pages)

This manual contains comprehensive information on inspecting, replacing, an d adjusting the tension of timing drive chains for more than 300 types of gasol ine and diesel engines of European and Asian vehicles produced from 1988 to 2001.

Removal and installation procedures. Setting the valve timing and tensioning the timing chain of the timing drive. Diagrams of chain routing with illustrations of t he positions of timing marks and tensioner adjusters. Torque values for bolts an d nuts with indication of their locations.

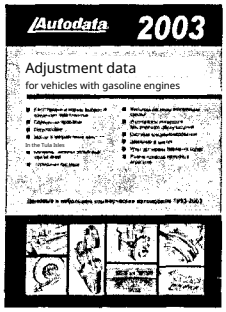

Adjustment data for cars with gasoline engines manufactured 1993 - 2003

Data are provided for passenger cars and light commercial vehicles manufactured 1993 - 2003 (123 parameters), over 1,000 pages, in Russian.

Vehicle and engine identification, cylinder arrangement. Type, displacement, compression pressure and engine power. Type, manufacturer and adjustment parameters of fuel and ignition systems. Valve and spark plug gaps. Idle speed adjustment and exhaust emission checks. Serpentine belt routing diagrams. Procedures for resetting maintenance indicators. Sequence and torque values for primary fastenings. Brake disc and drum dimensions. Tire pressures and front wheel alignment angles. Types of working fluids and fill capacities. Type and refrigerant and compressor oil fill capacities for the air conditioner.

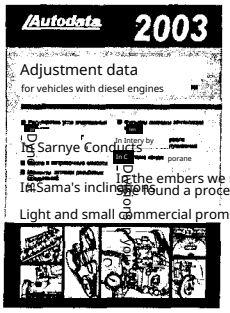

Adjustment data for cars with diesel engines manufactured 1991 - 2003

Data are provided for diesel engines of European and Asian passenger cars and light trucks, buses and tractors manufactured 1991 - 2003 (125 parameters), over 900 pages, in Russian.

Identification models: model, year, diesel injection pump (ТНВД).

Engine service and adjustment: clearances valves, glow plugs, boost pressure, fuel tank capacities, tightening torques, smoke inspection exhaust gases.

Fuel equipment: manufacturer, injection pump and injector numbers, operating pressures, minimum and maximum idle speeds, injection timing. Sizes of brake discs and drums.

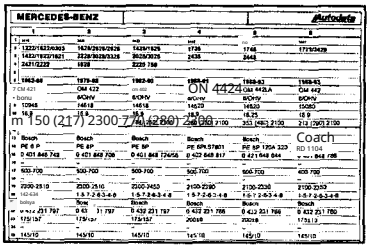

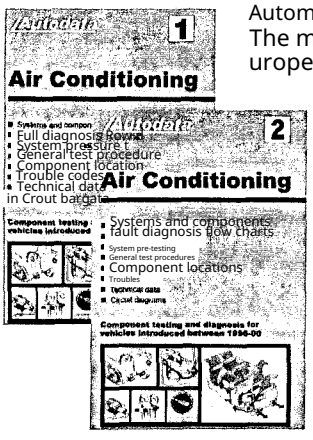

Automotive air conditioners (Volume 1 and Volume 2)

The manual contains information on more than 150 models of E uropean and Asian cars produced during the period:

from 1991–1997 (volume 1) (832 pages, with key in Russian)

from 1996–2000 (volume 2) (832 pages, with key in Russian,

General chapters:

Description and operating principles of the system and components

Troubleshooting flowcharts

System pressure checks

General inspection procedures

Models:

Electrical Schematics

Component Locations

Self-diagnosis

Service information

Air conditioner filter replacement

Fuse and Relay Block Location

Technical data: refrigerant, types of oil and quantities, adjustment of the electromagnetic clutch compressors and sensor resistances

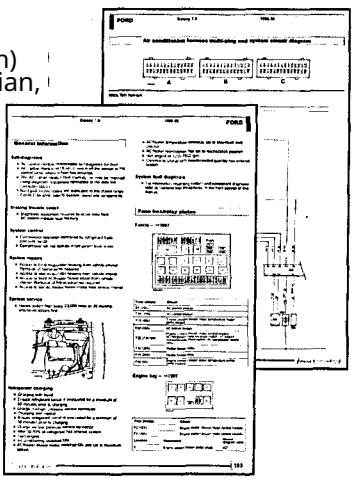

Our publications can be purchased retail in stores:

In Moscow (publisher's stores):

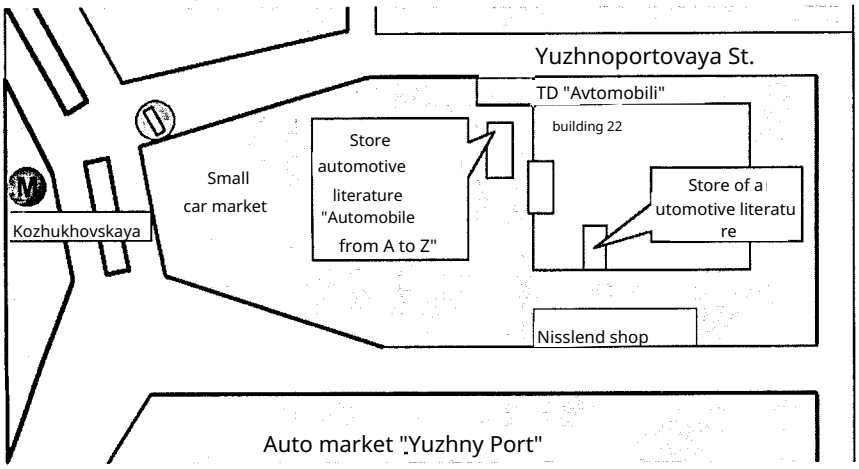

More than 900 titles of books on the repair of foreign and domestic cars

Retail trade:
Yuzhnoportovaya 22, pavilion "Au tomobile from A to Z", in front of the main entrance to the "Automobiles" d epartment store, and in the right wing of the sales hall, pavilion No. 7 Op ening hours:
from 9:00 to 17:00 without days off.

Retail store phone:
517-05-30

Delivery within Moscow

In other cities:

Belogorsk
Auto Service Center "MAKS", Kirova St. 306
tel. (41641) 4-06-06, 5-10-00
www.maxauto.ru, e-mail: belmax@belcom.khv.ru

Blagoveshchensk
Gorky St. 118, tel. (41622) 35-74-40

Vladivostok
Company "AVTOBIZ" E-mail: mail@autobiz.ru
Wholesale trade of automotive literature,
Snegovaya St. 13
Tel./fax (4232) 44-44-53, 44-20-16
Working hours: 9:00 - 18:00 Sat. 10:00 - 15:00.

"BOOK FAIR at DKZhD"
Wholesale and retail trade of automotive literature
Partizansky Prospekt 62A, 2nd floor

Yekaterinburg
A. Valek St. 12
tel./fax (3432) 59-42-00, 59-48-98, 59-44-84
E-mail: domknigi@mail.ur.ru

Chelyuskintsev St. 23
tel./fax (3432) 53-24-89, 53-24-90
E-mail: gvardia@mail.ur.ru

Irkutsk
Auto market "ZNAMENSKY", pavilion No. 100
Store "Mir Avto", Fourier St. 4A, pavilion No. 16
tel. 59-54-36

Meridian Auto Pavilion Complex
Traktovaya St., pavilion No. 22 tel. 43-86-32

Kirov
tel. (8332) 35-71-93, E-mail: temp@avto.kirov.ru

Krasnoyarsk
Lenin St. 28. Store "Erudit", tel. 27-62-50
E-mail: limis@online.ru

Minsk
Central Automobile Market JSC "Torgovy Mir
KOLTSO", yellow kiosks No. 41 and No. 138
tel. +375-296-74-26-14, +375-296-72-88-21
E-mail: alkub@nsys.by

Novorossiysk
Anapskoye Highway, building 18
Hotel "Brigantina", office 227
tel. (8617) 611-807, 8-918-483-0-163

Novosibirsk
"Top-Book", Arbuzov Street, building 1/1,
tel. (383-2) 36-10-26, 36-10-27, E-mail: office@top-kniga.ru
Spare Parts Center "Grand-Auto",
Petukhova St., 51, Pavilion 4, tel. (383-2) 35-00-39

Orenburg
Tel. (3532) 41-15-13, E-mail: takmak@relay.esoo.ru

Petropavlovsk-Kamchatsky
Auto market "Na vysotnoy", 2nd demonstration hall

Samara
Chkalova St., 100. tel. (8462) 37-02-14, 42-96-28,
tel. (8462) 42-96-29, 42-96-30, 42-96-22
E-mail: chaconne@samaramail.ru

Saint Petersburg
"Alphamer Publishing", Ligovsky Prospect, 33.
tel./fax (812) 275-3327, tel. (812) 277-2788
"Mir knigi" (World of Books), Savushkina St., 20,
tel. (812) 430-69-33, E-mail: m-a-k@mail.ru

Surgut
Yugorskaya St., 32, tel. 26-13-56, E-mail: zit@surgut.ru

Ulan-Ude
"Monroe - Service", tel. (3012) 21-42-12,
E-mail: kurant@burnet.ru

Khabarovsk
Volochaevskaya St., 176, tel. (4212) 32-47-41
K. Marx St., 128, tel. (4212) 27-70-71
E-mail: dkniga@pop.redcom.ru
Industrialnaya St., 1B, "Universal" Shopping Center, pavilion No.13,
tel. (4212) 36-70-62
Voronezhskaya St., 138, "Trak-Avto" store,
tel. (4212) 64-52-48

Kharkiv
"Autoinform", tel. (0572) 72-32-77, 17-04-71

Chelyabinsk
"Home Goods" store, Engels St., 65
"Iskra" auto market

Yuzhno-Sakhalinsk
tel. (4242) 55-84-45, E-mail: avtostyle_sakh@mail.ru

Yakutsk
Yaroslavskogo St., building 16/1,
tel. (4112) 24-10-30, 24-20-47, E-mail: evax@mail.sakha.ru